U.S. Department of
Transportation
**Pipeline and
Hazardous Materials
Safety Administration**

**East Building, PHH-23
1200 New Jersey Ave, SE
Washington, D.C. 20590**

February 10, 2020

Dr. James M. Shuler
Manager, Packaging Certification Program
Department of Energy
U.S. Department of Energy
1000 Independence Ave, SW
EM-60
Washington, DC, 20585
USA

Dear Dr. James M. Shuler,

As your February 5, 2020 letter requested, Department of Energy has been registered as a user of IAEA Certificate of Competent Authority USA/0356/S-96 for the Eckert & Ziegler Isotope Products Model HEG-XXX Series (A3000, A3000-1, A3015, A3015-1, A3023, A3024-1, A3024-2, A3024-3, and A3024-4), where XXX represents the radionuclide mass number. The sources described in the attached certificate have demonstrated their ability to meet the regulatory requirements for special form radioactive material as prescribed in the regulations of the United States of America and the International Atomic Energy Agency.

A copy of the certificate is enclosed. All future revisions of the certificate will be forwarded to Department of Energy at James.Shuler@em.doe.gov.

Sincerely,

Richard W. Boyle, Chief
Radioactive Materials Branch
Office of Engineering and Research

U.S. Department
of Transportation

Pipeline and
Hazardous Materials
Safety Administration

East Building, PHH-23
1200 New Jersey Ave, SE
Washington, D.C. 20590

**IAEA CERTIFICATE OF COMPETENT AUTHORITY**
**SPECIAL FORM RADIOACTIVE MATERIALS**

**CERTIFICATE USA/0356/S-96, REVISION 14**

This certifies that the sources described have been demonstrated to meet the regulatory requirements for special form radioactive material as prescribed in the regulations of the International Atomic Energy Agency[1] and the United States of America[2] for the transport of radioactive material.

1. Source Identification - Eckert & Ziegler Isotope Products Model HEG-XXX Series (A3000, A3000-1, A3015, A3015-1, A3023, A3024-1, A3024-2, A3024-3, and A3024-4), where XXX represents the radionuclide mass number.

2. Source Description - Cylindrical double encapsulations made of Type 304 or 304L stainless steel and fusion welded. Approximate external dimensions are 6.4 mm (0.25 in.) in diameter and 15.9 mm (0.625 in.) in length (Models A3000 and A3000-1); 6.0 mm (0.236 in.) in diameter and 8.0 mm (0.315 in.) in length (Models A3015 and A3015-1); 6.0 mm (0.236 in.) in diameter and 12.0 mm (0.473 in.) in length with one end having an internal 3-48 thread (Model A3023); and 6.0 mm (0.236 in.) in diameter and 10.0 mm (0.394 in.) in length (Models A3024-1, A3024-2, A3024-3, and A3024-4). Construction shall be in accordance with attached Isotope Products Laboratories Drawing Nos. 3000 (Sheet 3 or 4 of 10), 3015 (Sheet 3 or 4 of 8), 3023 (Sheet 3 of 7), or 3024 (Sheet 4 or 5 of 8).

---

[1] "Regulations for the Safe Transport of Radioactive Material, 2012 Edition, No. SSR-6" published by the International Atomic Energy Agency (IAEA), Vienna, Austria.

[2] Title 49, Code of Federal Regulations, Parts 100-199, United States of America.

3. Radioactive Contents - The sources described by this certificate are authorized to contain any one of the following radionuclides in the chemical form identified and limited to the activity shown.

| Radionuclide | Form | Activity GBq (Ci) |
|---|---|---|
| Na-22 | NaCl in gold or ceramic | 3.7 (0.10) |
| Co-57 | $CoCl_2$ or CoO in ceramic or Co metal plated on Ni foil | 11.1 (0.30) |
| Co-58 | $CoCl_2$ or CoO in ceramic | 11.1 (0.30) |
| Co-60 | $CoCl_2$ or CoO in ceramic or 1 mm x 1mm Ni clad Co | 22.2 (0.60) |
| Ge-68 | $GeO_2$ in silver | 1.9 (0.05) |
| Ba-133 | $BaSO_4$ in ceramic | 3.7 (0.10) |
| Cs-137 | CsCl in gold or Cs in ceramic | 22.2 (0.60) |
| Eu-152 | Oxide in gold or ceramic | 0.74 (0.020) |
| Ra-226 | $RaSO_4$ in gold or ceramic | 1.9 (0.05) |
| Cf-252 | Oxide in metal or ceramic | 0.037 (0.001) |
| Actinides* | Oxides in gold or ceramic | 1.9 (0.05) |

*(Isotopes of Ac, Th, Pa, Np, U, Pu, Am, and Cm only)

4. Management System Activities - Records of Management System activities required by Paragraph 306 of the IAEA regulations shall be maintained and made available to the authorized officials for at least three years after the last shipment authorized by this certificate. Consignors in the United States exporting shipments under this certificate shall satisfy the requirements of Subpart H of 10 CFR 71.

5. Expiration Date - This certificate expires on June 30, 2024. Previous editions which have not reached their expiration date may continue to be used.

**CERTIFICATE USA/0356/S-96, REVISION 14**

This certificate is issued in accordance with paragraph(s) 804 of the IAEA Regulations and Section 173.476 of Title 49 of the Code of Federal Regulations, in response to the June 25, 2019 petition by Eckert & Ziegler Isotope Products, Valencia, CA, and in consideration of other information on file in this Office.

Certified By:

for William Schoonover
Associate Administrator for Hazardous Materials Safety

July 03, 2019
(DATE)

Revision 14 - Issued to extend the expiration date and update Drawing No. 3000.

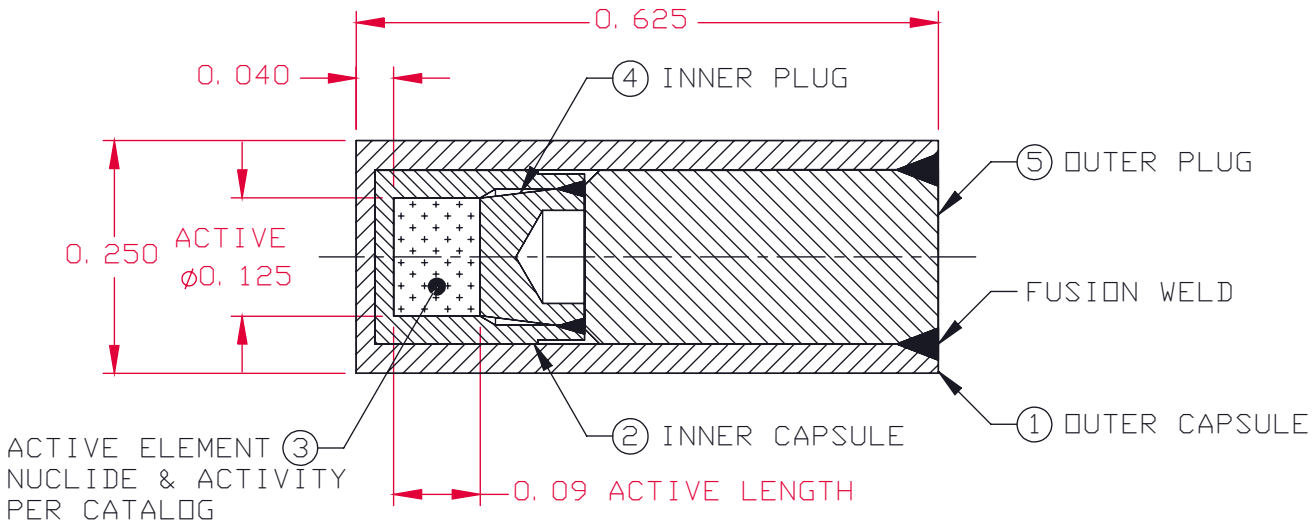


SECTION A–A

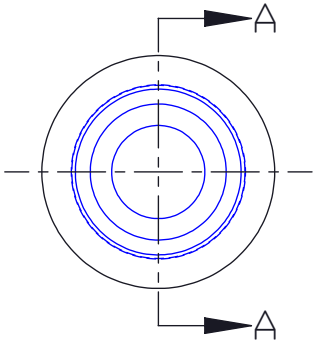


3. IDENTIFY PART NUMBER
2. ALL CAPSULES AND PLUGS ARE MADE FROM 304 OR 304L STAINLESS STEEL AND THE ACTIVE ELEMENT IS CERAMIC
1. ASSEMBLE COMPLETE PER ENGINEERING DRAWING AND FUSION WELD AS REQUIRED

NOTES: UNLESS OTHERWISE SPECIFIED

SECTION A–A

P/N A3000 ASSEMBLY, MODEL 225 POINT SOURCE

| | | | | | | |
|---|---|---|---|---|---|---|
| Eckert & Ziegler<br>Isotope Products<br>Valencia, California 91355 | UNLESS OTHERWISE SPECIFIED DIMENSIONS ARE IN INCHES<br>TOLERANCES ON<br>FRACTION ±1/64 · DECIMAL X ±.1 · XX .01 · XXX .002 · ANGLE ±.5° | DESIGN EZ/DI | DRAWING TITLE MODEL 225 POINT SOURCE | | | |
| | | SCALE NONE | SERIES TITLE INDUSTRIAL SOURCES, HIGH INTENSITY GAMMA AND NEUTRON | | | |
| THIS DRAWING IS THE PROPERTY OF ECKERT&ZIEGLER ISOTOPE PRODUCTS AND MAY NOT BE USED, REPRODUCED, PUBLISHED OR DISCLOSED TO OTHERS WITHOUT EXPRESS AUTHORIZATION BY ECKERT&ZIEGLER ISOTOPE PRODUCTS. | THIRD ANGLE PROJECTION | SIZE A | CAGE CODE 32993 | REVISION L | DRAWING NUMBER 3000 | SHEET 3 OF 10 |

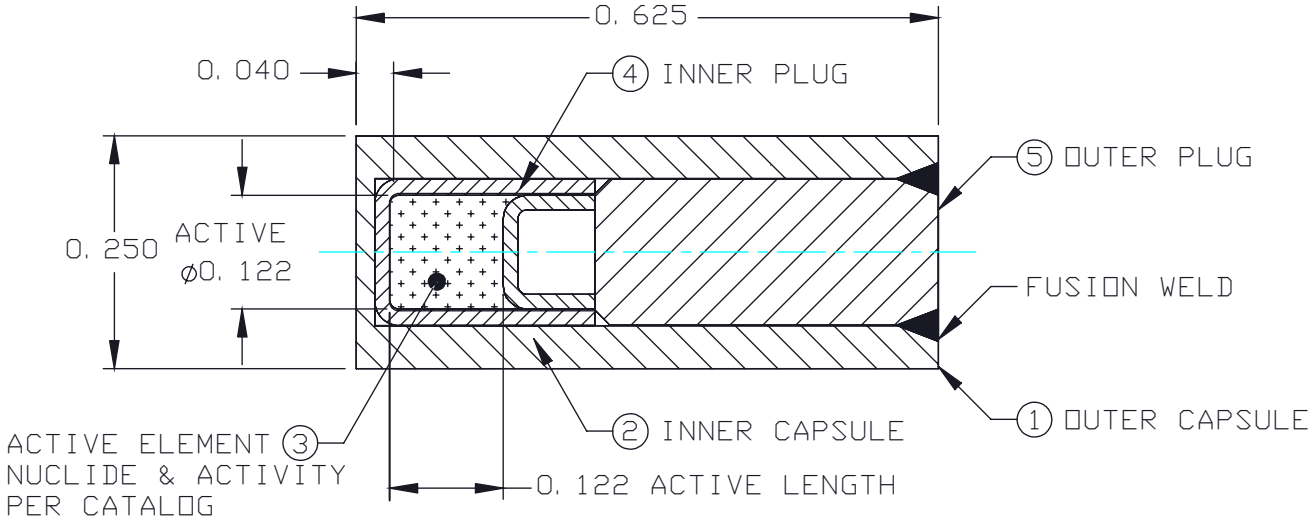


SECTION A-A

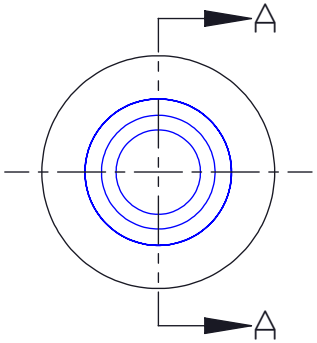


3. IDENTIFY PART NUMBER
2. ALL CAPSULES AND PLUGS ARE MADE FROM 304 OR 304L STAINLESS STEEL AND THE ACTIVE ELEMENT IS CERAMIC
1. ASSEMBLE COMPLETE PER ENGINEERING DRAWING AND FUSION WELD AS REQUIRED

NOTES: UNLESS OTHERWISE SPECIFIED

SECTION A-A

P/N A3000-1 ASSEMBLY, MODEL 225 POINT SOURCE

| | | | | | | |
|---|---|---|---|---|---|---|
| Eckert & Ziegler<br>Isotope Products<br>Valencia, California 91355 | UNLESS OTHERWISE SPECIFIED DIMENSIONS ARE IN INCHES<br>TOLERANCES ON<br>FRACTION ±1/64 \| DECIMAL X ±.1 \| XX .01 \| XXX .002 \| ANGLE ±.5° | DESIGN EZ/DI | DRAWING TITLE MODEL 225 POINT SOURCE | | | |
| | | SCALE NONE | SERIES TITLE INDUSTRIAL SOURCES, HIGH INTENSITY GAMMA AND NEUTRON | | | |
| THIS DRAWING IS THE PROPERTY OF ECKERT&ZIEGLER ISOTOPE PRODUCTS AND MAY NOT BE USED, REPRODUCED, PUBLISHED OR DISCLOSED TO OTHERS WITHOUT EXPRESS AUTHORIZATION BY ECKERT&ZIEGLER ISOTOPE PRODUCTS. | THIRD ANGLE PROJECTION | SIZE A | CAGE CODE 32993 | REVISION L | DRAWING NUMBER 3000 | SHEET 4 OF 10 |

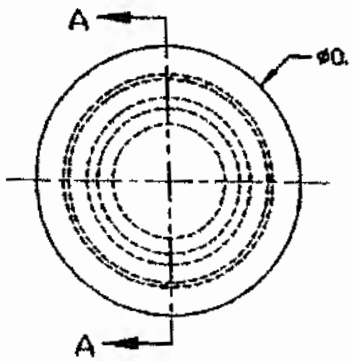


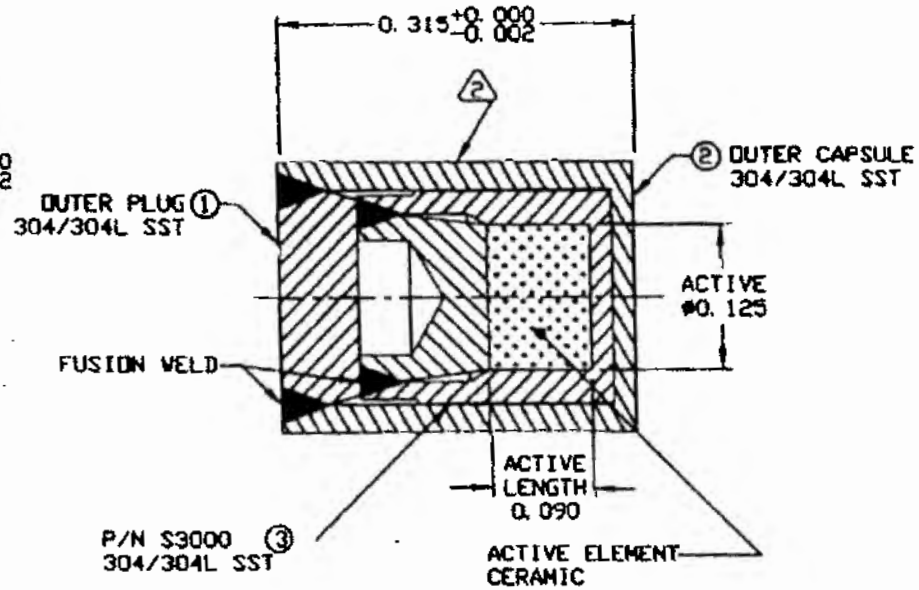


SECTION A-A

3. IDENTIFY PART NUMBER

2 ENGRAVE CHARACTERS 0.060 HIGH x 0.003 DEEP MAXIMUM AS SHOWN
IPL NUCLIDE ACTIVITY SERIAL NUMBER

1. ASSEMBLE COMPLETE PER ENGINEERING DRAWING AND PER PROCEDURE

NOTES: UNLESS OTHERWISE SPECIFIED

P/N A3015 ASSEMBLY

| | | | | | |
|---|---|---|---|---|---|
| Isotope Products Laboratories<br>An Eckert & Ziegler Company<br>VALENCIA, CALIFORNIA 91355 | UNLESS OTHERWISE SPECIFIED DIMENSIONS ARE IN INCHES<br>TOLERANCES ON<br>FRACTION ±1/64; DECIMAL X ±.1, XX .01, XXX .002; ANGLE ±.5°<br>THIRD ANGLE PROJECTION | DESIGN EZ/DI | DRAWING TITLE SPECIAL 225 CAPSULE, GAMMA POINT SOURCE | | |
| | | SCALE NONE | SERIES TITLE INDUSTRIAL SOURCES, HIGH INTENSITY GAMMA AND NEUTRON | | |
| | | SIZE A | CAGE CODE 32993 | REVISION G | DRAWING NUMBER 3015 | SHEET 3 OF 8 |

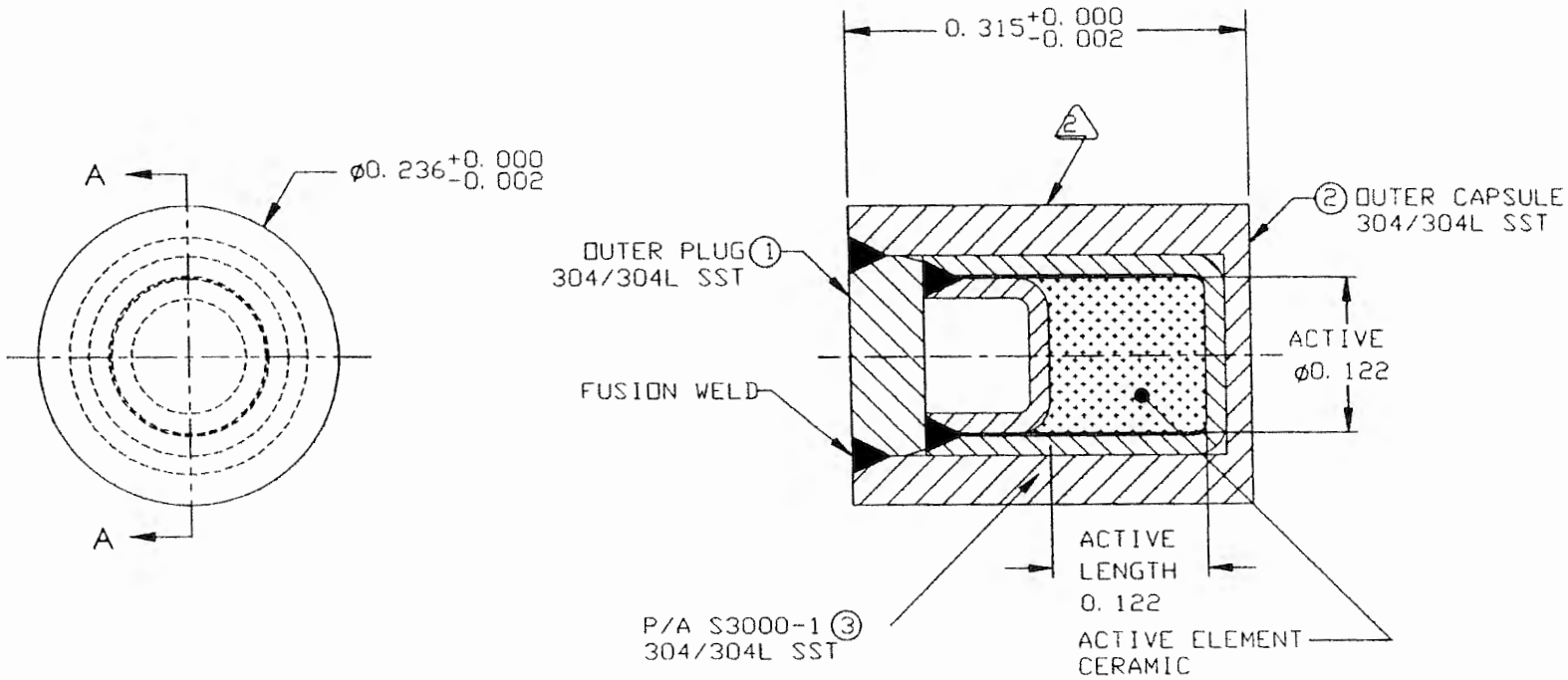


3. IDENTIFY PART NUMBER

2 ENGRAVE CHARACTERS 0.060 HIGH x 0.003 DEEP MAXIMUM AS SHOWN:
IPL NUCLIDE ACTIVITY SERIAL NUMBER

1. ASSEMBLE COMPLETE PER ENGINEERING DRAWING AND PER PROCEDURE

NOTES: UNLESS OTHERWISE SPECIFIED

A3015-1 ASSEMBLY

| | | | | | | |
|---|---|---|---|---|---|---|
| Isotope Products Laboratories<br>An Eckert & Ziegler Company<br>VALENCIA, CALIFORNIA 91355 | UNLESS OTHERWISE SPECIFIED DIMENSIONS ARE IN INCHES<br>TOLERANCES ON<br>FRACTION ±1/64 · DECIMAL X ±.1 · XX .01 · XXX .002 · ANGLE ±.5°<br>THIRD ANGLE PROJECTION | DESIGN EZ/DI | DRAWING TITLE SPECIAL 225 CAPSULE, GAMMA POINT SOURCE | | | |
| | | SCALE NONE | SERIES TITLE INDUSTRIAL SOURCES, HIGH INTENSITY GAMMA AND NEUTRON | | | |
| | | SIZE A | CAGE CODE 32993 | REVISION G | DRAWING NUMBER 3015 | SHEET 4 OF 8 |

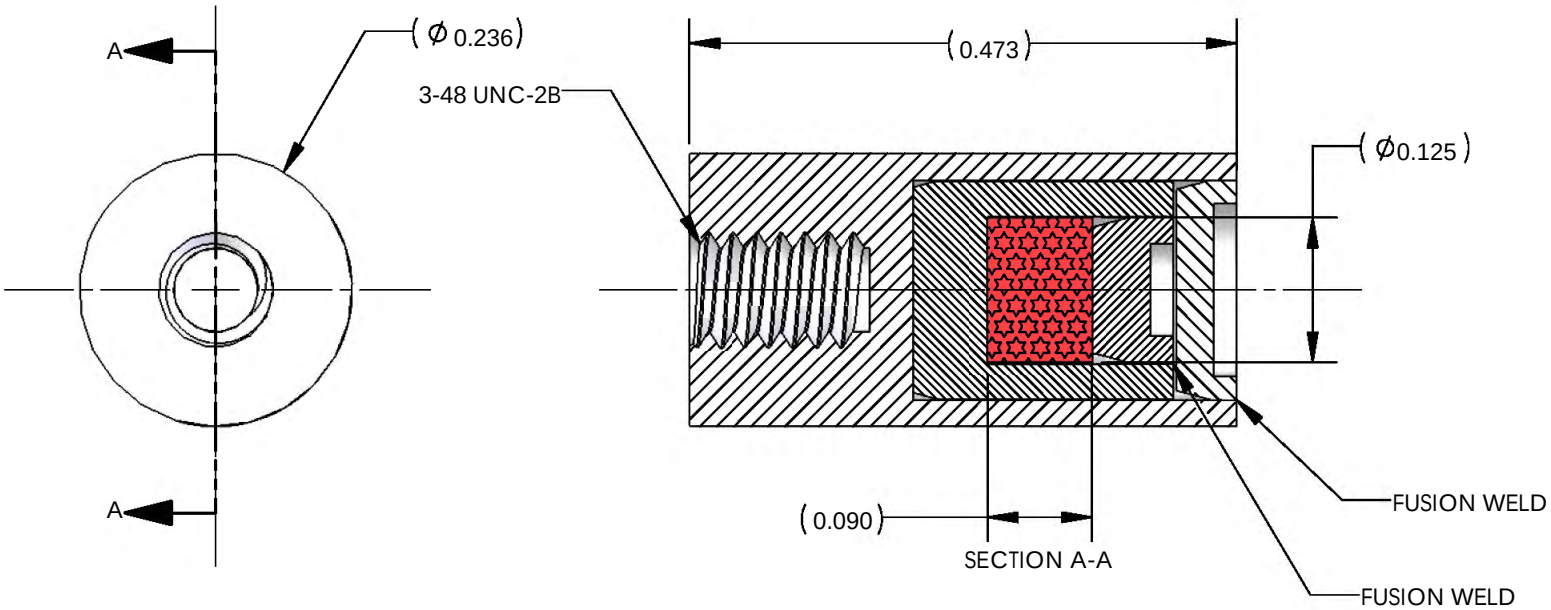


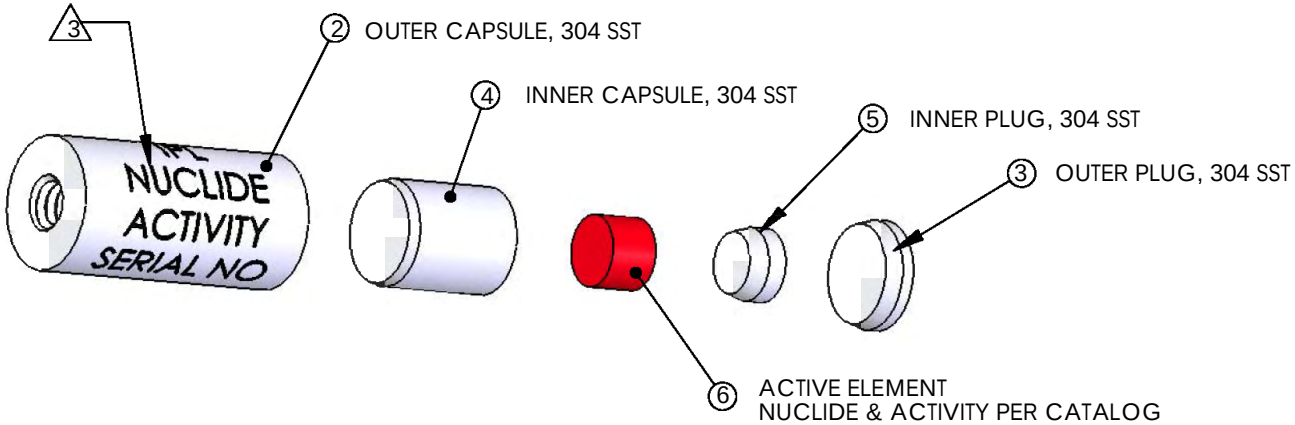


3. ENGRAVE CHARACTERS 0.060 HIGH X 0.003 DEEP MAX AS SHOWN (BLACK FILL) IPL, NUCLIDE, ACTIVITY, SERIAL NO.
2. PACKAGE AND IDENTIFY PART NUMBER THEREON
1. ASSEMBLE PER ENGINEERING DRAWING
NOTES: UNLESS OTHERWISE SPECIFIED

P/N A3023 GAMMA METRICS ASSEMBLY

Eckert & Ziegler
Isotope Products

VALENCIA, CALIFORNIA 91355

THIS DRAWING IS THE PROPERTY OF ECKERT&ZIEGLER ISOTOPE PRODUCTS AND MAY NOT BE USED, REPRODUCED, PUBLISHED OR DISCLOSED TO OTHERS WITHOUT EXPRESS AUTHORIZATION BY ECKERT&ZIEGLER ISOTOPE PRODUCTS.

CAGE CODE 32993
DRAWING SIZE LETTER

UNLESS OTHERWISE SPECIFIED DIMENSIONS ARE IN INCH SIZES.
METRIC UNITS [mm] ARE IN MILLIMETERS.

TOLERANCES (UNLESS OTHERWISE SPECIFIED)

| | | | | |
|---|---|---|---|---|
| X.XXX | ± | .002 | INCH | ANGULAR TOLERANCE OF 0°±30' |
| X.XX | ± | .005 | INCH | FRACTIONAL DIMENSIONS ± 1/32" |
| X.X | ± | .03 | INCH | REFERENCE DIMENSIONS () N/A |
| X. | ± | .1 | INCH | SURFACE ROUGHNESS µINCH MAX |

DRAWN JMD/RLT
ME/CHECKER SC
ENGINEER EZ
SCALE 6:1

TITLE
GAMMA METRICS

SERIES TITLE
HIGH INTENSITY GAMMA AND NEUTRON SOURCES

DRAWING NO. 3023
REV B
SHEET 3 OF 7

| | A3024-1 | A3024-3 |
|---|---|---|
| A(CENTER OF ACTIVITY) | 0.085[2.16] | 0.085[2.16] |
| B(ACTIVE DIAMETER) | 0.125[3.18] | 0.125[3.18] |
| C(ACTIVE LENGTH) | 0.090[2.29] | 0.090[2.29] |
| ENGRAVING | STANDARD | CUSTOMER SPECIFIC |

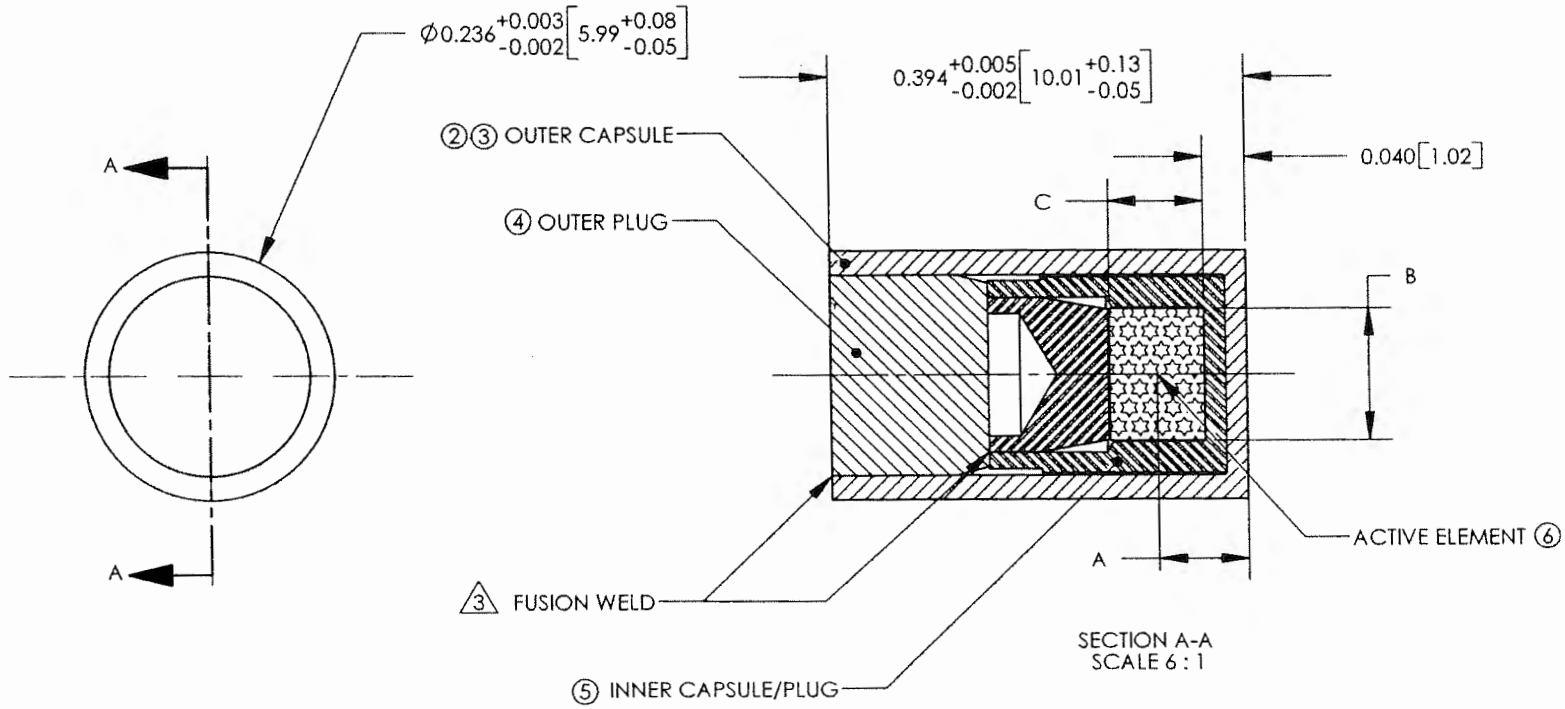


3 FUSION WELD AS REQUIRED 0.015 MINIMUM WELD DEPTH
2. PACKAGE AND IDENTIFY PART NUMBER THEREON
1. ASSEMBLE PER ENGINEERING DRAWING.
NOTES: UNLESS OTHERWISE SPECIFIED

A3024-1/ A3024-3 ASSEMBLY

Eckert & Ziegler
Isotope Products
VALENCIA, CALIFORNIA 91355

THIS DRAWING IS THE PROPERTY OF ECKERT&ZIEGLER ISOTOPE PRODUCTS AND MAY NOT BE USED, REPRODUCED, PUBLISHED OR DISCLOSED TO OTHERS WITHOUT EXPRESS AUTHORIZATION BY ECKERT&ZIEGLER ISOTOPE PRODUCTS.

UNLESS OTHERWISE SPECIFIED DIMENSIONS ARE IN INCH-SIZES. METRIC UNITS [mm] ARE IN MILLIMETERS.

TOLERANCES (UNLESS OTHERWISE SPECIFIED)

| | | | |
|---|---|---|---|
| X.XXX | ± .002 | INCH | ANGULAR TOLERANCE OF 0°±30' |
| X.XX | ± .005 | INCH | FRACTIONAL DIMENSIONS ± 1/32" |
| X.X | ± .03 | INCH | REFERENCE DIMENSIONS () N/A |
| X. | ± .1 | INCH | SURFACE ROUGHNESS µINCH MAX |

ALL DIMENSIONS ARE FINISHED DIMENSIONS

THIRD ANGLE PROJECTION

DRAWN RLT
ME/CHECKER LF
ENGINEER RMD
SCALE NONE
SIZE A

TITLE HEG SOURCE, 1cm LENGTH

SERIES TITLE INDUSTRIAL SOURCES, HIGH INTENSITY GAMMA AND NEUTRON

| CAGE CODE | DRAWING NO. | REV | SHEET |
|---|---|---|---|
| 32993 | 3024 | F | 4 OF 8 |

| | A3024-2 | A3024-4 |
|---|---|---|
| A(CENTER OF ACTIVITY) | 0.099[2.51] | 0.099[2.51] |
| B(ACTIVE DIAMETER) | 0.118[3.00] | 0.118[3.00] |
| C(ACTIVE LENGTH) | 0.118[3.00] | 0.118[3.00] |
| ENGRAVING | STANDARD | CUSTOMER SPECIFIC |

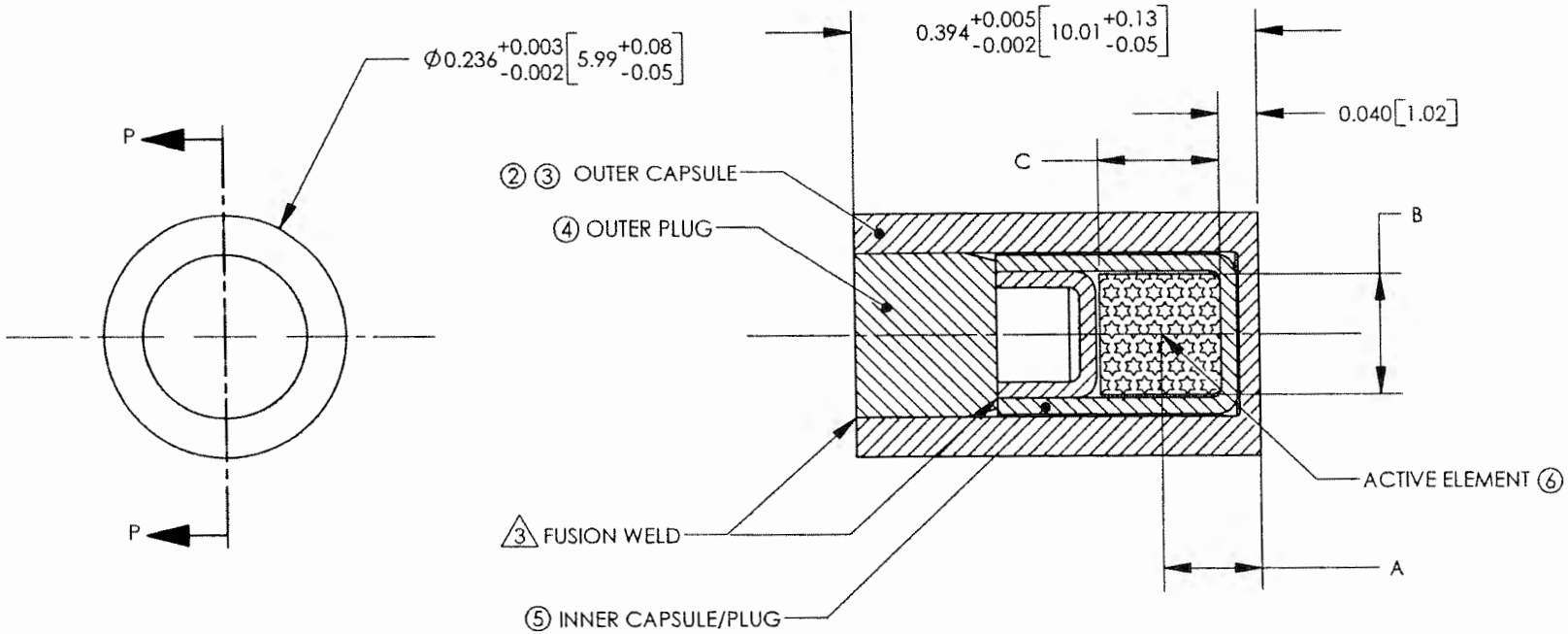


SECTION P-P
SCALE 6 : 1

3. FUSION WELD AS REQUIRED 0.015 MINIMUM WELD DEPTH
2. PACKAGE AND IDENTIFY PART NUMBER THEREON
1. ASSEMBLE PER ENGINEERING DRAWING.
NOTES: UNLESS OTHERWISE SPECIFIED

A3024-2/A3024-4 ASSEMBLY

Eckert & Ziegler
Isotope Products
VALENCIA, CALIFORNIA 91355

UNLESS OTHERWISE SPECIFIED DIMENSIONS ARE IN INCH-SIZES. METRIC UNITS [mm] ARE IN MILLIMETERS.

TOLERANCES (UNLESS OTHERWISE SPECIFIED)

| | | | |
|---|---|---|---|
| X.XXX | ± .002 | INCH | ANGULAR TOLERANCE OF 0°±30' |
| X.XX | ± .005 | INCH | FRACTIONAL DIMENSIONS ± 1/32" |
| X.X | ± .03 | INCH | REFERENCE DIMENSIONS () N/A |
| X. | ± .1 | INCH | SURFACE ROUGHNESS µINCH MAX |

ALL DIMENSIONS ARE FINISHED DIMENSIONS

THIRD ANGLE PROJECTION

DRAWN RLT
ME/CHECKER LF
ENGINEER RMD

TITLE HEG SOURCE, 1cm LENGTH

SERIES TITLE INDUSTRIAL SOURCES, HIGH INTENSITY GAMMA AND NEUTRON

| SCALE | SIZE | CAGE CODE | DRAWING NO. | REV | SHEET |
|---|---|---|---|---|---|
| NONE | A | 32993 | 3024 | F | 5 OF 8 |

THIS DRAWING IS THE PROPERTY OF ECKERT&ZIEGLER ISOTOPE PRODUCTS AND MAY NOT BE USED, REPRODUCED, PUBLISHED OR DISCLOSED TO OTHERS WITHOUT EXPRESS AUTHORIZATION BY ECKERT&ZIEGLER ISOTOPE PRODUCTS.

U.S. Department of
Transportation

**Pipeline and
Hazardous Materials
Safety Administration**

**East Building, PHH-23
1200 New Jersey Ave, SE
Washington, D.C. 20590**

**CERTIFICATE NUMBER:** USA/0356/S-96

**ORIGINAL REGISTRANT(S):**

Eckert & Ziegler Isotope Products
24937 Avenue Tibbitts
Valencia, CA, 91355
USA

J.L. Shepherd & Associates
1010 Arroyo Ave.
San Fernando, CA, 91340-1822
USA

Halliburton
3000 North Sam Houston Parkway, East
Houston, TX, 77032
USA

Stuart Hunt & Associates Ltd
5949 Ambler Drive
Mississauga, Ontario, L4W 2K2
Canada

Tru-Tec Services, Inc.
11005 West Fairmont Parkway
La Porte, TX, 77571
USA

Troxler Electronic Laboratories
P.O. Box 12057
3008 Cornwallis Road
Research Triangle Park, NC, 27709
USA

U.S. Geologic Survey
Idaho Water Science Center, U.S. Geological Survey
Department of Interior
1955 N Fremont  MS 4131
Idaho Falls, ID, 83415

USA

**REGISTERED USERS:**

Department of Energy
U.S. Department of Energy
1000 Independence Ave, SW
EM-60
Washington, DC, 20585
USA