U.S.NRC

United States Nuclear Regulatory Commission

Protecting People and the Environment

NUREG-2216

Standard Review Plan for Transportation Packages for Spent Fuel and Radioactive Material

Final Report

Office of Nuclear Material Safety and Safeguards

AVAILABILITY OF REFERENCE MATERIALS IN NRC PUBLICATIONS

NRC Reference Material

As of November 1999, you may electronically access NUREG-series publications and other NRC records at the NRC's Public Electronic Reading Room at http://www.nrc.gov/reading-rm.html. Publicly released records include, to name a few, NUREG-series publications; *Federal Register* notices; applicant, licensee, and vendor documents and correspondence; NRC correspondence and internal memoranda; bulletins and information notices; inspection and investigative reports; licensee event reports; and Commission papers and their attachments.

NRC publications in the NUREG series, NRC regulations, and Title 10, "Energy," in the *Code of Federal Regulations* may also be purchased from one of these two sources.

1. **The Superintendent of Documents**
   U.S. Government Publishing Office
   Washington, DC 20402-0001
   Internet: http://bookstore.gpo.gov
   Telephone: 1-866-512-1800
   Fax: (202) 512-2104

2. **The National Technical Information Service**
   5301 Shawnee Road
   Alexandria, VA 22161-0002
   http://www.ntis.gov
   1-800-553-6847 or, locally, (703) 605-6000

A single copy of each NRC draft report for comment is available free, to the extent of supply, upon written request as follows:

U.S. Nuclear Regulatory Commission
Office of Administration
Multimedia, Graphics and Storage & Distribution Branch
Washington, DC 20555-0001
E-mail: distribution.resource@nrc.gov
Facsimile: (301) 415-2289

Some publications in the NUREG series that are posted at the NRC's Web site address http://www.nrc.gov/reading-rm/doc-collections/nuregs are updated periodically and may differ from the last printed version. Although references to material found on a Web site bear the date the material was accessed, the material available on the date cited may subsequently be removed from the site.

Non-NRC Reference Material

Documents available from public and special technical libraries include all open literature items, such as books, journal articles, transactions, *Federal Register* notices, Federal and State legislation, and congressional reports. Such documents as theses, dissertations, foreign reports and translations, and non-NRC conference proceedings may be purchased from their sponsoring organization.

Copies of industry codes and standards used in a substantive manner in the NRC regulatory process are maintained at—

The NRC Technical Library
Two White Flint North
11545 Rockville Pike
Rockville, MD 20852-2738

These standards are available in the library for reference use by the public. Codes and standards are usually copyrighted and may be purchased from the originating organization or, if they are American National Standards, from—

American National Standards Institute
11 West 42nd Street
New York, NY 10036-8002
http://www.ansi.org
(212) 642-4900

Legally binding regulatory requirements are stated only in laws; NRC regulations; licenses, including technical specifications; or orders, not in NUREG-series publications. The views expressed in contractor-prepared publications in this series are not necessarily those of the NRC.

The NUREG series comprises (1) technical and administrative reports and books prepared by the staff (NUREG-XXXX) or agency contractors (NUREG/CR-XXXX), (2) proceedings of conferences (NUREG/CP-XXXX), (3) reports resulting from international agreements (NUREG/IA-XXXX), (4) brochures (NUREG/BR-XXXX), and (5) compilations of legal decisions and orders of the Commission and Atomic and Safety Licensing Boards and of Directors' decisions under Section 2.206 of NRC's regulations (NUREG-0750).

DISCLAIMER: This report was prepared as an account of work sponsored by an agency of the U.S. Government. Neither the U.S. Government nor any agency thereof, nor any employee, makes any warranty, expressed or implied, or assumes any legal liability or responsibility for any third party's use, or the results of such use, of any information, apparatus, product, or process disclosed in this publication, or represents that its use by such third party would not infringe privately owned rights.

NUREG-2216

U.S.NRC
United States Nuclear Regulatory Commission
Protecting People and the Environment

Standard Review Plan for Transportation Packages for Spent Fuel and Radioactive Material

Final Report

Manuscript Completed: February 2020
Date Published: August 2020

Prepared by:
Joseph Borowski
Michel Call
Darrell Dunn
Antonio Rigato
Jeremy Smith
Jorge Solis
Jeremy Tapp
Bernard White

Office of Nuclear Material Safety and Safeguards

ABSTRACT

This Standard Review Plan (SRP) provides guidance to the U.S. Nuclear Regulatory Commission (NRC) staff for reviewing an application for package approval issued under Title 10 of the *Code of Federal Regulations* (10 CFR), Part 71, "Packaging and Transportation of Radioactive Material." NRC approval of a package design typically results in issuance of a certificate of compliance (CoC) or a letter amendment for a transportation package.

The objectives of this SRP are to assist the NRC staff in its reviews by

- providing a basis that promotes uniform quality and a consistent regulatory review of an application for a CoC for a transportation package
- presenting a basis for the review's scope
- identifying acceptable approaches to meeting regulatory requirements
- suggesting possible evaluation findings that can be used in the safety evaluation report

This SRP was published for public comment, and the responses to those comments are available at ML20023A361. This SRP may be revised and updated as the need arises on a chapter-by-chapter basis to clarify the content, correct errors, or incorporate modifications approved by the Director of the NRC Division of Spent Fuel Management. Comments, suggestions for improvement, and notices of errors or omissions should be sent to and will be considered by the Director, Division of Spent Fuel Management, Office of Nuclear Material Safety and Safeguards, U.S. Nuclear Regulatory Commission, Washington, DC 20555-0001.

TABLE OF CONTENTS

ABSTRACT ..... **iii**

TABLE OF CONTENTS ..... **v**

LIST OF FIGURES ..... **xv**

LIST OF TABLES ..... **xvii**

ABBREVIATIONS AND ACRONYMS ..... **xix**

INTRODUCTION ..... **xxv**

1 GENERAL INFORMATION EVALUATION **1-1**
1.1 Review Objective 1-1
1.2 Areas of Review 1-1
1.3 Regulatory Requirements and Acceptance Criteria 1-2
1.3.1 Drawings 1-3
1.3.2 Quality Assurance 1-4
1.4 Review Procedures 1-4
1.4.1 Package Design Information 1-5
1.4.1.1 Purpose of application 1-5
1.4.1.2 Proposed use and contents 1-6
1.4.1.3 Package type and model number 1-6
1.4.1.4 Package category and maximum activity 1-6
1.4.1.5 Codes and standards 1-7
1.4.1.6 Criticality safety index 1-7
1.4.1.7 Quality assurance program 1-7
1.4.2 Package Description 1-7
1.4.2.1 Packaging 1-7
1.4.2.2 Operational features 1-8
1.4.2.3 Contents of packaging 1-9
1.4.3 Summary of Compliance with 10 CFR Part 71 1-11
1.4.3.1 General requirements of 10 CFR 71.43 1-11
1.4.3.2 Condition of package after tests in 10 CFR 71.71 and 10 CFR 71.73 1-11
1.4.3.3 Structural, Thermal, Containment, Shielding, Criticality, Materials 1-11
1.4.3.4 Operational procedures, acceptance tests, and maintenance 1-11
1.4.4 Certification Approach for Commercial Spent Nuclear Fuel 1-11
1.4.5 Drawings 1-12
1.4.6 Appendix 1-14
1.5 Evaluation Findings 1-15
1.6 References 1-16

2 STRUCTURAL EVALUATION 2-1
2.1 Review Objective 2-1
2.2 Areas of Review 2-1
2.3 Regulatory Requirements and Acceptance Criteria 2-2
2.4 Review Procedures 2-2
2.4.1 Description of Structural Design 2-3
2.4.1.1 General 2-3
2.4.1.2 Identification of codes and standards for package design 2-5
2.4.2 General Requirements for All Packages 2-7
2.4.2.1 Minimum package size 2-7
2.4.2.2 Tamper-indicating feature 2-7
2.4.2.3 Positive closure 2-7
2.4.2.4 Package valve 2-7
2.4.3 Lifting and Tie-Down Standards for All Packages 2-8
2.4.3.1 Lifting devices 2-8
2.4.3.2 Tie-down devices 2-8
2.4.4 General Considerations for Structural Evaluation of Packaging 2-9
2.4.4.1 Evaluation by analysis 2-9
2.4.4.2 Evaluation by test 2-10
2.4.5 Normal Conditions of Transport 2-12
2.4.5.1 Heat 2-12
2.4.5.2 Cold 2-13
2.4.5.3 Reduced external pressure 2-13
2.4.5.4 Increased external pressure 2-13
2.4.5.5 Vibration and fatigue 2-14
2.4.5.6 Water spray 2-14
2.4.5.7 Free drop 2-14
2.4.5.8 Corner drop 2-14
2.4.5.9 Compression 2-14
2.4.5.10 Penetration 2-15
2.4.6 Hypothetical Accident Conditions 2-15
2.4.6.1 Free drop 2-16
2.4.6.2 Crush 2-16
2.4.6.3 Puncture 2-16
2.4.6.4 Thermal 2-17
2.4.6.5 Immersion—fissile material 2-17
2.4.6.6 Immersion—all packages 2-17
2.4.7 Air Transport Accident Conditions for Fissile Material 2-17
2.4.7.1 Free drop 2-18
2.4.7.2 Crush test 2-18
2.4.7.3 Puncture test 2-18
2.4.7.4 Thermal Test 2-18
2.4.7.5 90-meter-per-second Impact 2-18
2.4.8 Special Requirement for Type B Packages Containing More Than 10^5 A_2 2-18
2.4.9 Air Transport of Plutonium 2-19
2.4.10 Appendix 2-19
2.5 Evaluation Findings 2-20
2.6 References 2-21

ATTACHMENT 2A COMPUTATIONAL MODELING SOFTWARE TECHNICAL REVIEW GUIDANCE 2-25

3 THERMAL EVALUATION 3-1
3.1 Review Objective 3-1
3.2 Areas of Review 3-1
3.3 Regulatory Requirements and Acceptance Criteria 3-2
3.3.1 Description of the Thermal Design 3-2
3.3.2 Material Properties and Component Specifications 3-2
3.3.3 General Considerations for Thermal Evaluations 3-4
3.3.4 Evaluation of Accessible Surface Temperatures 3-4
3.3.5 Thermal Evaluation Under Normal Conditions of Transport 3-4
3.3.6 Thermal Evaluation Under Hypothetical Accident Conditions 3-4
3.4 Review Procedures 3-5
3.4.1 Description of the Thermal Design 3-7
3.4.1.1 Packaging design features 3-7
3.4.1.2 Codes and standards 3-8
3.4.1.3 Content heat load specification 3-8
3.4.1.4 Summary tables of temperatures 3-8
3.4.1.5 Summary tables of pressures in the containment system 3-9
3.4.2 Material Properties and Component Specifications 3-9
3.4.2.1 Material thermal properties 3-9
3.4.2.2 Specifications of components 3-11
3.4.2.3 Thermal design limits of package materials and components 3-11
3.4.3 General Considerations for Thermal Evaluations 3-11
3.4.3.1 Evaluation by analyses 3-12
3.4.3.2 Evaluation by Tests 3-13
3.4.3.3 Confirmatory analyses 3-15
3.4.3.4 Effects of uncertainties 3-15
3.4.3.5 Conservatisms 3-15
3.4.4 Evaluation of Accessible Surface Temperatures 3-16
3.4.5 Thermal Evaluation Under Normal Conditions of Transport 3-16
3.4.5.1 Heat and cold 3-16
3.4.5.2 Maximum normal operating pressure 3-17
3.4.6 Thermal Evaluation Under Hypothetical Accident Conditions 3-19
3.4.6.1 Initial conditions 3-19
3.4.6.2 Fire test 3-19
3.4.6.3 Maximum temperatures and pressures 3-20
3.4.7 Appendix 3-21
3.4.7.1 Radioactive materials 3-21
3.4.7.2 Spent nuclear fuel 3-23
3.5 Evaluation Findings 3-25
3.6 References 3-26

4 CONTAINMENT EVALUATION 4-1
4.1 Review Objective 4-1
4.2 Areas of Review 4-1
4.3 Regulatory Requirements and Acceptance Criteria 4-1

4.3.1 General Requirements 4-2
4.3.2 Containment Under Normal Conditions of Transport 4-3
4.3.3 Containment Under Hypothetical Accident Conditions 4-4
4.4 Review Procedures 4-4
4.4.1 Description of the Containment System 4-4
4.4.1.1 Containment boundary 4-4
4.4.1.2 Codes and standards 4-7
4.4.1.3 Special requirements for damaged spent nuclear fuel 4-7
4.4.2 General Considerations for Containment Evaluations 4-7
4.4.2.1 Type AF fissile packages 4-7
4.4.2.2 Type B packages 4-7
4.4.2.3 Combustible-gas generation 4-8
4.4.3 Containment Evaluation under Normal Conditions of Transport 4-9
4.4.3.1 Type B transportation packages 4-9
4.4.3.2 Spent nuclear fuel transportation packages 4-9
4.4.3.3 Compliance with containment design criteria 4-10
4.4.4 Containment Evaluation Under Hypothetical Accident Conditions 4-11
4.4.4.1 Type B transportation packages 4-11
4.4.4.2 Spent nuclear fuel transportation packages 4-12
4.4.4.3 Compliance with containment design criterion 4-12
4.4.5 Leakage Rate Tests for Type B Packages 4-12
4.4.6 Appendix 4-13
4.5 Evaluation Findings 4-13
4.6 References 4-14

5 SHIELDING EVALUATION 5-1
5.1 Review Objective 5-1
5.2 Areas of Review 5-1
5.3 Regulatory Requirements and Acceptance Criteria 5-1
5.4 Review Procedures 5-5
5.4.1 Description of Shielding Design 5-6
5.4.1.1 Shielding design features 5-7
5.4.1.2 Summary tables of maximum external radiation levels 5-10
5.4.2 Radioactive Materials and Source Terms 5-12
5.4.2.1 Source-term calculation methods 5-14
5.4.2.2 Gamma sources 5-16
5.4.2.3 Neutron sources 5-18
5.4.3 Shielding Model and Model Specifications 5-20
5.4.3.1 Configuration of source and shielding 5-20
5.4.3.2 Material properties 5-22
5.4.4 Shielding Evaluation 5-23
5.4.4.1 Methods 5-23
5.4.4.2 Code input and output data 5-26
5.4.4.3 Fluence-rate-to-radiation-level conversion factors 5-27
5.4.4.4 External radiation levels 5-28
5.4.4.5 Confirmatory analyses 5-31
5.4.5 Appendix 5-32
5.5 Evaluation Findings 5-32
5.6 References 5-33

6 CRITICALITY EVALUATION 6-1
6.1 Review Objective 6-1
6.2 Areas of Review 6-1
6.3 Regulatory Requirements and Acceptance Criteria 6-2
6.4 Review Procedures 6-4
6.4.1 Description of Criticality Design 6-5
6.4.1.1 Packaging design features 6-5
6.4.1.2 Codes and standards 6-6
6.4.1.3 Summary table of criticality evaluations 6-7
6.4.1.4 Criticality safety index 6-7
6.4.2 Contents 6-8
6.4.3 General Considerations for Criticality Evaluations 6-11
6.4.3.1 Model configuration 6-11
6.4.3.2 Material properties 6-12
6.4.3.3 Analysis methods and nuclear data 6-13
6.4.3.4 Demonstration of maximum reactivity 6-14
6.4.3.5 Confirmatory analyses 6-15
6.4.3.6 Moderator exclusion under hypothetical accident conditions 6-15
6.4.4 Single Package Evaluation 6-16
6.4.4.1 Configuration 6-16
6.4.4.2 Results 6-17
6.4.5 Evaluations of Package Arrays 6-17
6.4.5.1 Package arrays under normal conditions of transport 6-17
6.4.5.2 Evaluation of package arrays under hypothetical accident conditions 6-17
6.4.5.3 Package arrays results and criticality safety index 6-18
6.4.6 Benchmark Evaluations 6-18
6.4.6.1 Experiments and applicability 6-19
6.4.6.2 Bias determination 6-19
6.4.7 Burnup Credit Evaluation for Commercial Light-Water Reactor Spent Nuclear Fuel 6-20
6.4.7.1 Limits for the certification basis 6-22
6.4.7.2 Model assumptions 6-22
6.4.7.3 Code validation—isotopic depletion 6-24
6.4.7.4 Code validation—k_{eff} determination 6-25
6.4.7.5 Loading curve and burnup verification 6-27
6.4.8 Appendix 6-29
6.5 Evaluation Findings 6-29
6.6 References 6-31

ATTACHMENT 6A TECHNICAL RECOMMENDATIONS FOR THE CRITICALITY SAFETY REVIEW OF PRESSURIZED-WATER REACTOR SPENT NUCLEAR FUEL TRANSPORTATION PACKAGES AND STORAGE CASKS THAT USE BURNUP CREDIT 6-35

7 MATERIALS EVALUATION 7-1
7.1 Review Objective 7-1
7.2 Areas of Review 7-1
7.3 Regulatory Requirements and Acceptance Criteria 7-2

7.4 Review Procedures 7-4
7.4.1 Drawings 7-4
7.4.2 Codes and Standards 7-6
7.4.2.1 Usage and endorsement 7-7
7.4.2.2 ASME code components 7-7
7.4.2.3 Code case use/acceptability 7-7
7.4.2.4 Non-ASME code components 7-8
7.4.3 Weld Design and Inspection 7-8
7.4.3.1 Moderator exclusion for commercial spent nuclear fuel packages under hypothetical accident conditions 7-9
7.4.4 Mechanical Properties 7-9
7.4.4.1 Tensile properties 7-9
7.4.4.2 Fracture resistance 7-10
7.4.4.3 Tensile properties and creep of aluminum alloys at elevated temperatures 7-11
7.4.4.4 Impact limiters 7-12
7.4.5 Thermal Properties of Materials 7-12
7.4.6 Radiation Shielding 7-12
7.4.6.1 Neutron-shielding materials 7-13
7.4.6.2 Gamma-shielding materials 7-13
7.4.7 Criticality Control 7-14
7.4.7.1 Neutron-absorbing (poison) material specification 7-14
7.4.7.2 Computation of percent credit for boron-based neutron absorbers 7-15
7.4.7.3 Qualifying properties not Associated with attenuation 7-16
7.4.8 Corrosion Resistance 7-18
7.4.8.1 Environments 7-19
7.4.8.2 Carbon and low-alloy steels 7-19
7.4.8.3 Austenitic stainless steel 7-19
7.4.9 Protective Coatings 7-20
7.4.9.1 Review guidance 7-20
7.4.9.2 Scope of coating application 7-20
7.4.9.3 Coating selection 7-20
7.4.9.4 Coating qualification testing 7-21
7.4.10 Content Reactions 7-21
7.4.10.1 Flammable and explosive reactions 7-21
7.4.10.2 Content chemical reactions, outgassing, and corrosion 7-22
7.4.11 Radiation Effects 7-23
7.4.12 Package Contents 7-24
7.4.13 Fresh (Unirradiated) Fuel Cladding 7-24
7.4.14 Spent Nuclear Fuel 7-25
7.4.14.1 Spent fuel classification 7-25
7.4.14.2 Uncanned spent fuel 7-26
7.4.14.3 Canned spent fuel 7-33
7.4.15 Bolting Material 7-34
7.4.16 Seals 7-34
7.4.16.1 Metallic seals 7-35
7.4.16.2 Elastomeric seals 7-35
7.5 Evaluation Findings 7-36
7.6 References 7-37

ATTACHMENT 7A CLARIFICATIONS, GUIDANCE, AND EXCEPTIONS TO ASTM STANDARD PRACTICE C1671-15 7-43

ATTACHMENT 7B FUEL SELECTION..... 7-49

8 OPERATING PROCEDURES EVALUATION..... 8-1
8.1 Review Objective 8-1
8.2 Areas of Review.....8-1
8.3 Regulatory Requirements and Acceptance Criteria.....8-1
8.3.1 Package Loading.....8-1
8.3.2 Package Unloading 8-2
8.3.3 Preparation of Empty Package for Transport.....8-2
8.3.4 Other Procedures 8-2
8.4 Review Procedures.....8-2
8.4.1 Package Loading.....8-3
8.4.1.1 Preparation for loading 8-3
8.4.1.2 Loading of contents.....8-4
8.4.1.3 Preparation for transport 8-4
8.4.2 Package Unloading 8-6
8.4.2.1 Receipt of package from carrier 8-6
8.4.2.2 Preparations for unloading 8-6
8.4.2.3 Removal of contents.....8-7
8.4.3 Preparation of Empty Package for Transport.....8-7
8.4.4 Other Procedures 8-7
8.5 Evaluation Findings.....8-7
8.6 References 8-8

9 ACCEPTANCE TESTS AND MAINTENANCE PROGRAM EVALUATION 9-1
9.1 Review Objective 9-1
9.2 Areas of Review.....9-1
9.3 Regulatory Requirements and Acceptance Criteria.....9-1
9.3.1 Acceptance Tests.....9-2
9.3.2 Maintenance Program 9-2
9.4 Review Procedures.....9-2
9.4.1 Acceptance Tests.....9-3
9.4.1.1 Visual inspections and measurements 9-3
9.4.1.2 Weld examinations.....9-3
9.4.1.3 Structural and pressure tests.....9-4
9.4.1.4 Leakage tests.....9-5
9.4.1.5 Component and material tests.....9-5
9.4.1.6 Neutron-absorber and moderator tests.....9-5
9.4.1.7 Shielding tests.....9-6
9.4.1.8 Thermal tests 9-6
9.4.2 Maintenance Program 9-6
9.4.2.1 Structural and pressure tests.....9-6
9.4.2.2 Leakage tests.....9-6
9.4.2.3 Component and materials tests.....9-7
9.4.2.4 Neutron-absorber and moderator tests.....9-7
9.4.2.5 Shielding tests.....9-7
9.4.2.6 Thermal tests 9-7

9.4.2.7 Miscellaneous tests 9-7
9.5 Evaluation Findings 9-8
9.6 References 9-8

10 QUALITY ASSURANCE EVALUATION 10-1
10.1 Review Objective 10-1
10.2 Areas of Review 10-1
10.3 Regulatory Requirements and Acceptance Criteria 10-1
10.4 Review Procedures 10-2
10.4.1 Quality Assurance Organization 10-3
10.4.2 Quality Assurance Program 10-4
10.4.3 Package Design Control 10-5
10.4.4 Procurement Document Control 10-6
10.4.5 Instructions, Procedures, and Drawings 10-7
10.4.6 Document Control 10-8
10.4.7 Control of Purchased Material, Equipment, and Services 10-8
10.4.8 Identification and Control of Materials, Parts, and Components 10-10
10.4.9 Control of Special Processes 10-11
10.4.10 Internal Inspection 10-11
10.4.11 Test Control 10-12
10.4.12 Control of Measuring and Test Equipment 10-13
10.4.13 Handling, Storage, and Shipping Control 10-13
10.4.14 Inspection, Test, and Operating Status 10-14
10.4.15 Nonconforming Materials, Parts, or Components 10-14
10.4.16 Corrective Action 10-15
10.4.17 Quality Assurance Records 10-15
10.4.18 Audits 10-16
10.5 Evaluation Findings 10-17
10.6 References 10-18

11 GLOSSARY 11-1

APPENDIX A DESCRIPTION, SAFETY FEATURES, AND AREAS OF REVIEW FOR DIFFERENT TYPES OF RADIOACTIVE MATERIAL TRANSPORTATION PACKAGES A-1

APPENDIX B DIFFERENCES BETWEEN THERMAL AND RADIATION PROPERTIES OF MIXED OXIDE AND LOW-ENRICHED URANIUM RADIOACTIVE MATERIALS B-1

APPENDIX C DIFFERENCES BETWEEN THERMAL AND RADIATION PROPERTIES OF MIXED OXIDE AND LOW-ENRICHED URANIUM SPENT NUCLEAR FUEL C-1

APPENDIX D BENCHMARK CONSIDERATIONS FOR MIXED OXIDE RADIOACTIVE MATERIALS AND SPENT NUCLEAR FUEL D-1

APPENDIX E DESCRIPTION AND REVIEW PROCEDURES FOR IRRADIATED TRITIUM-PRODUCING BURNABLE ABSORBER RODS PACKAGES E-1

ATTACHMENT A PHYSICAL AND CHEMICAL PROPERTIES OF TRITIUM E–35

ATTACHMENT B BIOLOGICAL PROPERTIES OF TRITIUM AND TRITIUM HEALTH PHYSICS E–51

LIST OF FIGURES

Figure 1-1 Overview of General Information Evaluation 1-5

Figure 2-1 Information Flow for the Structural Evaluation 2-4

Figure 3-1 Information Flow for the Thermal Evaluation 3-6

Figure 4-1 Information Flow for the Containment Evaluation 4-5

Figure 5-1 Information Flow for the Shielding Evaluation 5-7

Figure 5-2 Illustration of Surfaces to Which Regulatory Radiation Limits Apply for Exclusive-Use and Non-Exclusive-Use Shipments 5-11

Figure 5-3 Cutaway Images Depicting Package Surfaces and Radiation Level Limits for Packages with Complex Surfaces 5-29

Figure 6-1 Information Flow for the Criticality Evaluation 6-6

Figure 6A-1 Reactivity Behavior In The GBC-32 As A Function Of Cooling Time For Fuel With 4.0 Weight Percent Uranium-235 Initial Enrichment And 40 Gwd/MTU Burnup 6-40

Figure 6A-2 Reactivity Effect Of Fuel Temperature During Depletion On K_{inf} In An Array Of Poisoned Storage Cells; Results Correspond To Fuel With 5.0 Weight Percent Initial Uranium-235 Enrichment 6-42

Figure 6A-3 Reactivity Effect Of Moderator Temperature During Depletion On K_{inf} In An Array Of Poisoned Storage Cells; Results Correspond To Fuel With 5.0 Weight Percent Initial Uranium-235 Enrichment 6-42

Figure 6A-4 Reactivity Effect Of Soluble Boron Concentration During Depletion On K_{inf} In An Array Of Poisoned Storage Cells; Results Correspond To Fuel With 5.0 Weight Percent Initial Uranium-235 Enrichment 6-43

Figure 6A-5 Reactivity Effect Of Specific Power During Depletion On K_{inf} In An Array Of Fuel Pins (Actinides Only) 6-44

Figure 6A-6 Reactivity Effect Of Specific Power During Depletion On K_{inf} In An Array Of Fuel Pins (Actinides And Fission Products) 6-45

Figure 6A-7 Effect Of Axial Burnup Distribution On K_{eff} In The GBC-32 For Actinide-Only Burnup Credit And Various Cooling Times For Fuel With 4.0 Weight Percent Initial Enrichment 6-47

Figure 6A-8 Representative Loading Curves And Discharged PWR Population 6-58

Figure 7-1 Information Flow for the Materials Evaluation 7-5

Figure 7A-1 Plot of the Effective Neutron Multiplication Factor, k_{eff}, as a Function of Heterogeneity Size 7-46

Figure 8-1 Information Flow for the Operating Procedures Evaluation 8-5

Figure 9-1 Information Flow for the Acceptance Tests and Maintenance Program Evaluation 9-4

LIST OF TABLES

Table 1 Interim Staff Guidance (ISGs) Incorporated Into This Standard Review Plan xxviii

Table 1-1 Relationship of Regulations and Areas of Review for Transportation Packages 1-3

Table 1-2 Summary of Approaches for Demonstrating Subcriticality of SNF Under the Requirements of 10 CFR 71.55(e) 1-13

Table 2-1 Relationship of Regulations and Areas of Review for Transportation Packages 2-3

Table 3-1 Relationship of Regulations and Areas of Review for Transportation Packages 3-3

Table 4-1 Relationship of Regulations and Areas of Review for Transportation Packages 4-2

Table 4-2 Release Fractions and Specific Activities for the Contributors to the Releasable Source Term for Packages Designed to Transport Irradiated Fuel Rods[a,b] 4-11

Table 5-1 Relationship of Regulations and Areas of Review for Transportation Packages 5-2

Table 5-2 Package and Vehicle External Radiation Level Limits[a] 5-2

Table 6-1 Relationship of Regulations and Areas of Review for Transportation Packages 6-3

Table 6-2 Recommended Set of Nuclides for Burnup Credit 6-23

Table 6-3 Isotopic k_{eff} Bias Uncertainty (Δk_i) for the Representative PWR SNF System Model Using ENDF/B-VII Data ($\beta_i = 0$) as a Function of Assembly Average Burnup 6-26

Table 6-4 Isotopic k_{eff} Bias (β_i) and Bias Uncertainty (Δk_i) for the Representative PWR SNF System Model Using ENDF/B-V Data as a Function of Assembly Average Burnup 6-26

Table 6-5 Summary of Code Validation Recommendations for Isotopic Depletion 6-26

Table 6-6 Summary of Minor Actinide and Fission Product Code Validation Recommendations for k_{eff} Determination 6-28

Table 6-7 Summary of Burnup Verification Recommendations 6-30

Table 6A-1 Recommended set of nuclides for actinide-only burnup credit 6-39

Table 6A-2 Recommended set of additional nuclides for actinide and fission product burnup credit 6-39

Table 6A-3 Isotopic k_{eff} bias uncertainty (Δk_i) for the representative PWR SNF system model using ENDF/B-VII data ($\beta_i = 0$) as a function of assembly-average burnup 6-56

Table 6A-4 Isotopic k_{eff} bias (β_i) and bias uncertainty (Δk_i) for the representative PWR SNF system model using ENDF/B-V data as a function of assembly-average burnup 6-56

Table 6A-5 Fission product reactivity worth for “typical” burnup in generic burnup credit cask (GBC-32) with 4 weight percent uranium-235 Westinghouse 17×17 OFA, burned to 40 GWd/MTU 6-57

Table 7-1 Relationship of Regulations and Areas of Review for Transportation Packages 7-3

Table 8-1 Relationship of Regulations and Areas of Review for Transportation Packages 8-2

Table 9-1 Relationship of Regulations and Areas of Review for Transportation Packages 9-2

ABBREVIATIONS AND ACRONYMS

ADAMS	Agencywide Documents Access and Management System
Ag	silver
AISC	American Institute of Steel Construction
ALARA	as low as is reasonably achievable (radiation exposure)
Am	americium
ANL	Argonne National Laboratory
ANS	American Nuclear Society
ANSI	American National Standards Institute
ASNT	American Society for Nondestructive Testing
APSR	axial power shaping rod
ASME	American Society of Mechanical Engineers
ASTM	American Society for Testing and Materials
AWS	American Welding Society
AWRE	Atomic Weapons Research Establishment
B_4C	boron carbide
B&PV	Boiler and Pressure Vessel (ASME Code)
BPR	burnable poison rod
BPRA	burnable poison rod assembly
BWR	boiling-water reactor
CE	Combustion Engineering
CE-PWR	Combustion Engineering System 80+ Pressurized-Water Reactor
CFR	Code of Federal Regulations
c.g.	center of gravity
CH_4	methane
CISCC	chloride-induced stress corrosion cracking
CMS	computational modeling software
CoC	certificate of compliance
CR	control rod
CRC	commercial reactor critical
Cs	cesium
CSI	criticality safety index
CVCM	collected volatile condensable materials
D	deuterium (chemical symbol)
D_2	deuterium gas
D_2O	deuterium oxide, heavy water
DOE	U.S. Department of Energy
DOT	U.S. Department of Transportation
DSFM	Division of Spent Fuel Management (NRC)
DT	deuterium tritium
DTO	tritiated heavy water
EALF	energy of average neutron lethargy-causing fission
EIA	Energy Information Administration
EPR	ethylene propylene rubber
EPRI	Electric Power Research Institute
Er	erbium

Er_2O_3	erbium oxide
Eu	europium
FG	fuel grade
GBC	generic burnup credit cask
GCI	grid convergence index
Gd	gadolinium
Gd_2O_3	gadolinium oxide
GE	General Electric
H	hydrogen, protium (chemical symbol)
H_2	hydrogen gas
H_2O	water
HD	hydrogen deuteride
HDO	hydrogen-deuterium oxide
HPS	Health Physics Society
HT	tritium gas
HTC	Haut Taux de Combustion
HTO	tritiated water vapor, tritium oxide
H/X	hydrogen-to-fissile atom ratios
IAEA	International Atomic Energy Agency
IBA	integral burnable absorber
ICRP	International Commission on Radiological Protection
IHECSBE	International Handbook of Evaluated Criticality Safety Benchmark Experiments
IN	information notice (NRC)
INMM	Institute for Nuclear Materials Management
ISG	interim staff guidance
k_{eff}	“k” effective-neutron multiplication factor or effective thermal conductivity
LEU	low-enriched uranium
lfpm	linear feet per minute
$LiAlO_2$	lithium aluminate
LSA	low specific activity
LWR	light-water reactor
MMC	metal matrix composite
MNOP	maximum normal operating pressure
Mo	molybdenum
MOX	mixed oxide
N_2	nitrogen gas
NASA	National Aeronautics and Space Administration
Nd	neodymium
NDE	nondestructive examination
NDT	nondestructive testing
NFH	nonfuel hardware
NIST	National Institute of Standards and Technology

NMSS	NRC Office of Nuclear Material Safety and Safeguards
Np	neptunium
NRC	U.S. Nuclear Regulatory Commission
NRR	Office of Nuclear Reactor Regulation (NRC)
NSA	neutron-source assembly
O	oxygen
O_2	oxygen gas
OCRWM	Office of Civilian Radioactive Waste Management
OFA	optimized fuel assembly
ORNL	Oak Ridge National Laboratory
UO_2	uranium dioxide
PEEK	polyetheretherketone
PG	power grade
PNNL	Pacific Northwest National Laboratory
Pu	plutonium
PVC	polyvinyl chloride
PWR	pressurized-water reactor
QA	quality assurance
QAPD	quality assurance program description
QARD	quality assurance requirements document
RAC	Respiratory Advisory Committee (DOE)
RAI	request for additional information
RAM	radioactive material
RCA	radiochemical assay
RES	Office of Nuclear Regulatory Research (NRC)
RG	regulatory guide (NRC)
Rh	rhodium
RIS	regulatory issue summary
RSICC	Radiation Safety Information Computational Center
Ru	ruthenium
SAR	safety analysis report
SBR	styrene-butadiene
SCO	surface contaminated object
SER	safety evaluation report
SFPO	Spent Fuel Project Office (NRC)
SI	International System of Units
Sm	samarium
SNF	spent nuclear fuel
SRP	standard review plan
SRS	Savannah River Site
SSCs	structures, systems, and components
STP	standard temperature and pressure
T	tritium (chemical symbol)
T_2	molecular tritium, tritium gas

T_2O	tritium oxide
Tc	technetium
TI	transportation index
TML	total mass loss
TPBARs	Tritium-Producing Burnable Absorber Rods
TVA	Tennessee Valley Authority
U	uranium
UF_6	uranium hexafluoride
UO_2	uranium dioxide
UT	ultrasonic testing
WG	weapons grade
WREC	Westinghouse Reactor Evaluation Center
X/Q	atmospheric dispersion

UNITS

A/g	Specific activity per gram
atm	atmosphere
Bq	Becquerel
C	Celsius
°C	degrees Celsius
Ci	curie
Ci/cm^3	curies per cubic centimeter
Ci/liter	curie per liter
Ci/yr	curies per year
cm	centimeter
cm^{-1}	per centimeter
cm^2	square centimeter
cm^3	cubic centimeter
dpm/100 cm^2	disintegrations per minute per 100 square centimeters
eV	electron volt
F	Fahrenheit
°F	degrees Fahrenheit
ft	foot
ft^2	square foot
ft^3	cubic foot
g	gravitational unit
gm	gram
GWd/MTU	gigawatt days per metric ton uranium
GWd/MTHM	gigawatt days per metric ton of heavy metal
Gy	gray
hr	hour
in.	inch
K	Kelvin
keV	kilo electron volt
kg	kilogram
km	kilometer
kPa	kilopascal
ksi	thousand pounds per square inch
L	liter
lb	pound
m	meter
m^2	square meter
m^3	cubic meter

mb	millibar
mCi	millicurie
mCi/hr	millicuries per hour
mCi/m^3	millicuries per cubic meter
mCi/(TPBAR-hr)	millicuries per TPBAR per hour
MeV	mega electron volt
mg	milligram (one-thousandth of a gram)
mg/cm^2	milligrams per square centimeter
mi	mile
mJ	millijoule
ml	milliliter
mm	millimeter (one-thousandth of a meter)
MPa	megapascal (million pascals)
mph	miles per hour
mrem	millirem
ms	millisecond
mSv	millisievert
MT	metric ton
MTHM	metric tons of heavy metal
MW	megawatt
MWd	megawatt days
MWd/MTU	megawatt days per metric ton uranium
MWd/MTHM	megawatt days per metric ton of heavy metal
N	newton
nCi	nanocurie
Pa	Pascal
PBq	petabecquerel
ppm	parts per million
psf	pounds per square foot
psi	pounds per square inch
psig	pounds per square inch gauge
rad	radiation-absorbed dose
s	second
Sv	sievert
Tbq	terabecquerel
*μ*Ci	microcurie
μm	micrometer
W	watt
wt%	weight percent
yr	year

INTRODUCTION

Purpose of the Standard Review Plan

The Standard Review Plan for Transportation Package Approval (referred to herein as the SRP) provides guidance to the U.S. Nuclear Regulatory Commission (NRC) staff for reviewing applications for approval of package designs used for the transport of radioactive materials under Title 10 of the U.S. *Code of Federal Regulations* (10 CFR) Part 71. It is not intended as an interpretation of NRC regulations. Nothing contained in this SRP may be construed as having the force and effect of NRC regulations (except where the regulations are cited), or as indicating that applications supported by safety analyses and prepared in accordance with Regulatory Guide (RG) 7.9, "Standard Format and Content of Part 71 Applications for Approval of Packages for Radioactive Material," will necessarily be approved, or as relieving any person from the requirements of 10 CFR Part 71 as well as other pertinent regulations, including but not limited to the following:

- 10 CFR Part 20, "Standards for Protection Against Radiation"
- 10 CFR Part 30, "Rules of General Applicability to Domestic Licensing of Byproduct Material"
- 10 CFR Part 40, "Domestic Licensing of Source Material"
- 10 CFR Part 60, "Disposal of High-Level Radioactive Wastes in Geologic Repositories"
- 10 CFR Part 70, "Domestic Licensing of Special Nuclear Material"

Three major objectives of this SRP include the following:

- summarize the regulatory requirements for package approval
- describe the procedure by which the staff determines that the requirements have been satisfied
- document the practices the NRC developed in previous package certifications

This SRP complements RG 7.9, which provides guidance to applicants on the standard format and content of applications for package approval. Unless specified, all acceptance criteria and review guidance in this SRP is applicable to all packages. Appendix A, "Description, Safety Features, and Areas of Review for Different Types of Radioactive Material Transportation Packages," to this SRP describes different types of packages for different types of contents and provides specific information on reviewing each package type. Note that Appendix A does not contain guidance specific to spent nuclear fuel packages.

Applicability

This SRP provides guidance for the NRC staff's review and approval of certificates of compliance for packaging used to transport radioactive materials (RAM).

Appendix E, "Description and Review Procedures for Irradiated Tritium-Producing Burnable Absorber Rods Packages," to this SRP provides supplemental general information and

guidance for reviewing applications for packaging used in the shipment of irradiated tritium-producing burnable absorber rods (TPBARs).

Organizational Structure

The SRP is organized to correlate with the recommended content for an application, as detailed in RG 7.9, which will be revised in the future to harmonize with this SRP. The individual sections of each chapter address the matters that are reviewed, the basis for the review, how the review is accomplished, and the conclusions that are sought and follow a common outline of subsections, as described below. In conjunction with the SRP, the NRC staff developed several interim staff guidance (ISG) documents related to package approvals under 10 CFR Part 71. An ISG addresses emergent review issues. This SRP combines and updates NUREG-1609, "Standard Review Plan for Transportation Packages for Radioactive Material," issued September 1997, and NUREG-1617, "Standard Review Plan for Transportation Packages for Spent Nuclear Fuel," issued March 2000, and their supplements and incorporates applicable ISGs, as shown in Table 1.

Table 1 Interim Staff Guidance (ISGs) Incorporated Into This Standard Review Plan

ISG # & Rev.	Title	Affected Chapter(s)
ISG 1 Rev. 2	Damaged Fuel	2, 4, 5, 6, 7
ISG 6	Establishing Minimum Initial Enrichment for the Bounding Design Basis Fuel Assembly(s)	5
ISG 7	Potential Generic Issue Concerning Cask Heat Transfer in a Transportation Accident	3
ISG 8 Rev. 3	Burnup Credit in the Criticality Safety Analyses of PWR Spent Fuel in Transport and Storage Casks	6
ISG 11 Rev. 3	Cladding Considerations for the Transportation and Storage of Spent Fuel	7
ISG 15	Materials Evaluation	5, 6, 7
ISG 19	Moderator Exclusion Under Hypothetical Accident Conditions and Demonstrating Subcriticality of Spent Fuel Under the Requirements of 10 CFR 71.55(e)	1, 3, 6
ISG 20	Transportation Package Design Changes Authorized Under 10 CFR Part 71 Without Prior NRC Approval	1, 3, 5, 6, 8, 9
ISG 21	Use of Computational Modeling Software	2, 3
ISG 22	Potential Rod Splitting Due to Exposure to an Oxidizing Atmosphere During Short-Term Cask Loading Operations in LWR or Other Uranium Oxide Based Fuel	3, 8
ISG 23	Application of ASTM Standard Practice C1671-07 When Performing Technical Reviews of Spent Fuel Storage and Transportation Packaging Licensing Actions	3, 5, 6, 7, 9

Because of the large variety of packages and the many different approaches that can be taken to evaluate these package designs, no single review plan can address in detail every situation that might be applicable to a review. The staff may therefore need to modify or expand the guidance in this review plan to adapt to specific package designs. The following areas of 10 CFR Part 71 are not within the scope of this SRP:

- Qualification and shipment of low-specific-activity material and surface-contaminated objects
- Qualification of special form radioactive material
- Reports, records, notifications, violations, and criminal penalties
- Exemptions and general licenses
- Requirements incorporated into 10 CFR Part 71 by reference to other regulations, (e.g.,10 CFR Parts 20, 21, 30, 40, 70, 73, and DOT or U.S. Postal Service regulations)

Technical Review Oversight

Certificate holders are responsible for demonstrating that the package design meets the requirements in 10 CFR Part 71, Subparts D, "Application for Package Approval," and E, "Package Approval Standards," and performing the preliminary determination, as required by 10 CFR 71.85, "Preliminary Determinations." Licensees are responsible for complying with the general license in accordance with 10 CFR 71.17, "General License: NRC-Approved Package," for safe operation and for complying with appropriate regulations during shipment. The NRC mission as the regulator is to confirm that the package design provides adequate protection of public health and safety and the environment. The value of the NRC review team is its independent expertise in identifying and ensuring the resolution of potential design or operational deficiencies, analytical errors, nonconservatisms or significant uncertainties in novel design approaches, or other issues that hinder the NRC's ability to ensure compliance with the regulations. If otherwise left unchecked by the licensee and the regulator, these issues could potentially lead to the unsafe or noncompliant use of the package.

Several considerations may influence the depth and rigor that is needed for a reasonable assurance determination of both safety and compliance. These include, but are not limited to, the novelty of the design (as compared to existing designs), safety margins, operational experience, and defense-in-depth. Any aspect of the design or procedures that the NRC determines the certificate holder should not change, without prior NRC approval, should be placed as a condition in the certificate. The design is specified in the certificate of compliance (CoC) (by reference) with drawings, operating procedures, acceptance tests and maintenance programs, and with other relevant documentation as needed. The staff and applicant should ensure that the CoC conditions include the appropriate level of detail that could also allow for appropriate minor changes to the package but still be within the design specified in the CoC (e.g., tolerances that are bounding of variations that can be seen in package fabrication).

Review Process

The reviews of the application are performed by reviewers with expertise in the technical areas described in this SRP. Because of the dependence between technical information in different sections of the application, coordination among the different disciplines is important to ensure a consistent, uniform, and high-quality review. As shown in the flow charts contained in each chapter of this SRP, technical issues are interwoven among the disciplines, and many rely on input from multiple areas.

When reviewing an amendment to a package design, the staff should consult the SERs of previous amendments, if applicable, as well as the SERs for similar, approved packages to

understand past NRC determinations regarding analyses affecting or similar to those in the application under review. In conducting reviews, the staff should confirm that the application properly applies NRC regulatory guidance, when endorsed by reference. While applicants are not required to comply with NRC guidance, the use of NRC guidance facilitates the staff's review process in evaluating package designs and confirming compliance with NRC regulations.

For amendments, the staff should review the entire amendment to ensure that the applicant has identified all the changes to the certificate of compliance. Amendments may range from minor changes in the design, contents, or operations to adding new major component designs or contents. Some amendments are based upon the design and methodologies the NRC previously reviewed for that package. Evaluations of amendment changes are often based on the performance of the package as an integrated system. As a result, the staff may reexamine portions of previously approved components, contents, or methodologies in the application to ensure that the design and operations, as modified under the amendment proposal, meet 10 CFR Part 71 requirements. During the audit review of an amendment, the staff may occasionally find errors or other safety questions that affect part of the previously approved design. The staff may need to review that part of the application and ask questions to assure the design remains safe and compliant with applicable regulations. The questions should be limited to understanding and resolving the specific technical issue and should consider past precedents, regulatory guidance, and risk significance, as appropriate. The staff should also consider other processes (e.g., inspections, enforcement actions, generic issue program) to resolve these types of potential safety questions with a previously approved design.

If the information provided in the application is not properly justified, the reviewer may develop and then forward to the applicant questions requesting clarification of technical issues via a request for additional information (RAI). The staff should review the applicant's response to the RAI, together with a supplemented application, for acceptability. The RAI process is repeated, as necessary, until the applicant demonstrates that the package design meets 10 CFR Part 71, or until the NRC terminates the application review or the applicant withdraws the application.

Safety Evaluation Report and Content

The NRC staff documents the results of an application review in a safety evaluation report (SER). Although the NRC Project Manager for the review will make the final determination of the organization of an SER, the SER typically is organized in the same manner as this SRP and contains the following information:

- a general description of the package, including the design and operational features, and content specifications

- a summary of the approach the applicant used to demonstrate compliance with the regulations, and a description of the reviews that the staff performed to confirm compliance

- comparison of systems, components, analyses, data, or other information important in the review analysis to the acceptance criteria, in addition to staff conclusions (including the bases for those conclusions) regarding the acceptability, suitability, or appropriateness of this information to provide reasonable assurance the acceptance criteria have been met

- summary of aspects of the review that were selected or emphasized, aspects of the design or contents that were modified by the applicant, aspects of the design that deviated from the criteria stated in the SRP, and the bases for any deviations from the SRP

- summary statements for evaluation findings at the end of each chapter

Content of this Standard Review Plan

Each chapter of the SRP is organized into the following sections:

- Review Objective
- Areas of Review
- Regulatory Requirements and Acceptance Criteria
- Review Procedures
- Evaluation Findings
- References

Review Objective This section provides the purpose and scope of the review and establishes the major review objectives for the chapter. The reviewer should obtain reasonable assurance during the review that the objectives are met.

Areas of Review This section lists the areas of review. Each area of review encompasses systems, components, analyses, data, or other information and provides the organizational structure for the rest of the chapter.

Regulatory Requirements and Acceptance Criteria The regulatory requirements portion of this section summarizes the regulatory requirements for 10 CFR Part 71 pertaining to the given chapter and can also list other significant regulatory requirements, such as those for 49 CFR Part 173, "Shippers—General Requirements for Shipments and Packagings." This list is not all-inclusive, and the reviewer should refer to the regulations to ensure all relevant requirements are addressed in the application.

This subsection includes the regulatory requirements by reference and identifies other criteria to demonstrate that the package meets the regulatory requirements in 10 CFR Part 71 that apply to the given chapter. In most chapters, the acceptance criteria are organized similar to the review areas established in the "Areas of Review" section of the specific chapter and identify the type and level of information that should be in the application.

This section typically sets forth the solutions and approaches that staff reviewers have previously determined to be acceptable for demonstration of compliance with the regulations and addressing specific safety concerns or design areas that are important to safety. These solutions and approaches are discussed in this SRP so that the reviewers can implement consistent and well-understood positions as similar safety issues arise in future cases. These solutions and approaches are acceptable to the staff, but they are not the only possible method for meeting the regulations.

Substantial staff time and effort has gone into developing these acceptance criteria. Consequently, a corresponding amount of time and effort may be required to review and accept new or different solutions and approaches. Thus, applicants proposing new solutions and approaches to safety issues or analytical techniques other than those described in the SRP may

experience longer review times. An alternative for the applicant is to propose new methods on a generic basis, apart from a CoC. Such an alternative proposal could consist of a submittal of a topical report.

Review Procedures This section presents a general approach that reviewers typically follow to establish reasonable assurance that the applicable acceptance criteria have been met. As an aid to the reviewer, this section may also provide information on what has been found acceptable in past reviews. This section identifies standards that have been found acceptable in particular reviews, or that are desirable but not specifically identified in existing regulatory documents. Since many reviews of applications are interdisciplinary, the reviewers should coordinate with each other, as necessary, to identify issues in other chapters. The section includes a flow chart figure to depict the coordination that may be necessary to conduct reviews. In addition, the reviewer may provide discussions on conditions of the approval. In these cases, the reviewer should include a discussion of each condition and the reasons for the addition of the condition in the relevant sections of the SER.

Evaluation Findings This section provides example evaluation findings and summary statements to be incorporated into the SER. The reviewer prepares the evaluation findings based on the applicant's satisfaction of the regulatory requirements. The findings are published in the SER.

References This section lists the NRC documents, codes, specifications, standards, regulations, and other technical documents referenced in the chapter.

1 GENERAL INFORMATION EVALUATION

1.1 Review Objective

The objective of this U.S. Nuclear Regulatory Commission's (NRC's) general information evaluation is to verify that the applicant has provided an adequate description of the package to familiarize reviewers with the pertinent features of package. The NRC reviewer will verify that the application (i) includes an overview of relevant package information, including its intended use; (ii) provides a summary description of the packaging, operational features, and contents; and (iii) provides engineering drawings that are sufficiently detailed and consistent with the package description to provide reasonable assurance that the transportation package can meet the regulations.

1.2 Areas of Review

All NRC reviewers should evaluate the General Description section of the application, regardless of their specific review assignments, to obtain a basic understanding of the package, its components and contents, and the protections afforded for the health and safety of the public. This chapter of the standard review plan (SRP) focuses on familiarizing the reviewer with general package design and contents and ensuring consistency between the package's general description and the remaining sections of the application. Much of the information relevant to this initial aspect of the package review is presented in more detail in later chapters of this SRP. The NRC staff should review the application for adequacy of the package and its descriptions and drawings.

Proprietary information, such as specific design details shown on the engineering drawings, may be withheld from public disclosure, subject to the provisions of Title 10 of the *Code of Federal Regulations* (10 CFR) 2.390, "Public Inspections, Exemptions, Requests for Withholding." The request for withholding must be accompanied by an affidavit and must include information to support the claim that the material is proprietary.

The NRC staff should review the application to verify that it adequately describes the package and includes adequately detailed drawings. In general, the staff should review the following information to determine the adequacy of the package description:

- package design information
  - purpose of application
  - proposed use and contents
  - package type and model number
  - package category and maximum activity
  - codes and standards
  - criticality safety index (CSI)
  - quality assurance program
- package description
  - packaging
  - operational features
  - contents of packaging

- summary of compliance with 10 CFR Part 71, “Packaging and Transportation of Radioactive Material”
    - — general requirements of 10 FR 71.43, “General Standards for All Packages”
    - — condition of package after tests in 10 CFR 71.71 and 10 CFR 71.73, “Hypothetical Accident Conditions”
    - — structural, thermal, containment, shielding, criticality, materials
    - — operational procedures, acceptance tests, and maintenance
- certification approach for commercial spent nuclear fuel (SNF)
- drawings
- appendix

1.3 Regulatory Requirements and Acceptance Criteria

This section provides a summary of those sections of 10 CFR Part 71 relevant to the review areas addressed in this SRP chapter. Table 1-1 identifies some regulatory requirements associated with the areas of review this chapter covers. These are not necessarily the only regulations that may apply but are meant to guide the reviewer’s initial assessment of whether sufficient information has been provided to conduct the safety evaluation.

The following paragraphs briefly describe the regulatory requirements and acceptance criteria of 10 CFR Part 71 applicable to the general information review. Each requirement includes the applicable section(s) of the regulation.

In addition to the requirements listed in Table 1-1, the following identifies additional specific regulatory requirements and acceptance criteria for assessing the adequacy of the package description and evaluation.

While there are no specific regulatory requirements on the format of the application for package approval, NRC Regulatory Guide (RG) 7.9, “Standard Format and Content of Part 71 Applications for Approval of Packaging for Radioactive Material,” provides recommendations on the format in which the content of the application is presented in order to facilitate the review of the information submitted in the application. The application for package approval should include the following items in sufficient detail such that the performance of the package can be evaluated:

- a description of the packaging design (10 CFR 71.31(a)(1), 10 CFR 71.33, “Package Description”)
- engineering drawings showing the design that can be referenced in the certificate of compliance (10 CFR 71.31, 10 CFR 71.33)
- a brief description of package operations (10 CFR 71.33, 10 CFR 71.35(c), 10 CFR 71.89)
- a description of a feature located outside of the package that, while intact, would provide evidence that unauthorized persons had not opened the package [10 CFR 71.43(b)]

Table 1-1 Relationship of Regulations and Areas of Review for Transportation Packages												
Areas of Review	**71.19**	**71.31**	**71.33**	**71.35**	**71.37**	**71.41**	**71.43**	**71.55**	**71.59**	**71.71**	**71.73**	**71.89**
Package design information	●	(a)(c)	(a)(1), (a)(3)	(b)(c)	●				(c)			
Package description		(a)(1)	●				●			●	●	●
Compliance with 10 CFR Part 71		●	●	●		(a)				●	●	
Certification approach for commercial SNF								(e)(1), (e)(2)				
Drawings		(a)(1)	●									
Note: The bullet (●) indicates the entire regulation as listed in the column heading applies.												

The applicant must describe and evaluate the application for a transportation package in sufficient detail to demonstrate compliance with the requirements specified in 10 CFR Part 71, Subpart E, "Package Approval Standards," under the tests and conditions in Subpart F, "Package, Special Form, and LSA-III Tests." [10 CFR 71.31, "Contents of Application;" 10 CFR 71.33; 10 CFR 71.35, "Package Evaluation;" and 10 CFR 71.41(a) and (b)]. The applicant should include a concise statement in the General Information section of the application that the package complies with the requirements in 10 CFR Part 71. This statement should provide a reference to the sections of the application that are used to specifically address compliance with the requirements of Subparts E and F of 10 CFR Part 71.

1.3.1 Drawings

Applicants should submit drawings that are sufficiently detailed to provide a package description that can be evaluated for compliance with 10 CFR Part 71. The packaging drawings become regulatory conditions for compliance, since the certificate of compliance incorporates them by reference. The applicant should clearly identify proprietary information and submit an affidavit in accordance with 10 CFR 2.390 to withhold such information in the NRC's Agencywide Documents Access and Management System (ADAMS).

The drawing should include the following information, on the drawing, and should be consistent with the description of the package included in the text:

- a title block that identifies the preparing organization
- drawing number
- sheet number
- title
- date
- signature or initials indicating approval of the drawing

The revised drawings should identify, on the drawing, the revision number, date, and incorporate an indicator of the change for each revision.

The drawings should include the following elements:

- general arrangement of the packaging and contents, including dimensions
- design features that affect the package evaluation
- package markings
- maximum allowable weight of the package
- maximum weight of contents and secondary packaging
- minimum weights, if appropriate

Information on design features should include the following details, as appropriate:

- identification of the design feature and its components

- materials of construction, including appropriate material specifications and material specification tolerances (e.g., minimum boron-10 areal density for poison plates, minimum boron and hydrogen content of neutron shields)

- classification of components according to importance to safety

- codes, standards, or similar specification for fabrication, assembly, and testing

- dimensions with appropriate tolerances

- operational specifications (e.g., bolt torque)

RG 7.9 and NUREG/CR-5502, "Engineering Drawings for 10 CFR Part 71 Package Approvals," provide additional guidance on engineering drawings submitted in the application.

1.3.2 Quality Assurance

Applicants should provide either a reference to an approved quality assurance program or provide a description of the quality assurance program in the application (see Chapter 10, "Quality Assurance Evaluation," of this SRP).

1.4 Review Procedures

The purpose of reviewing the General Information section of the application is to determine whether the applicant provided sufficient detail concerning the description of the package to provide an adequate basis for the staff to review it against applicable requirements in 10 CFR Part 71. All the remaining application sections consider the information and results of the General Information section. Figure 1-1 illustrates the information flow between the contents of an application and the review of the General Information section.

The applicant should ensure that the General Information section provides an adequate description of the package to allow the staff to evaluate its design and operation in subsequent sections. Note that the General Information section:

- does not contain the information necessary for a comprehensive technical review of the package

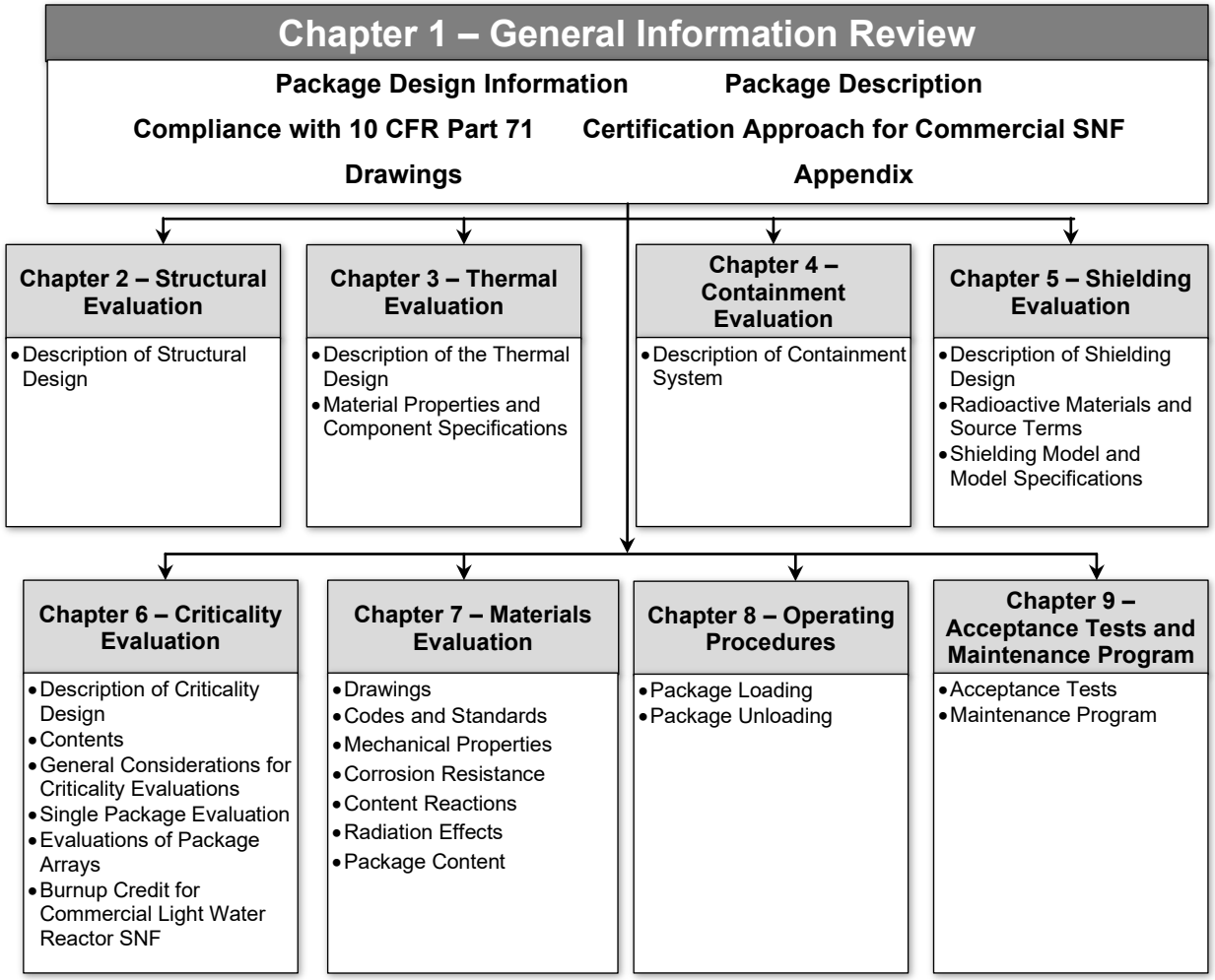

Figure 1-1 Overview of General Information Evaluation

- serves as a vehicle to facilitate consistency and reduce repetition between the various review disciplines (e.g., structural and shielding reviews)
- presents summary information for the nontechnical reviewer

1.4.1 Package Design Information

1.4.1.1 Purpose of application

Verify that the purpose of the application is clearly stated. The application may be for approval of a new design or revised certificate. (Note: in terms of transportation package approvals, the NRC uses the terms “certificate revision” and “amendment” interchangeably.) Ensure that an application for approval of a new design is complete and contains the information identified in 10 CFR Part 71, Subpart D, “Application for Package Approval.” If the application is for modification of an approved design, verify that the changes being requested are clearly identified. Modifications may include design changes, additions/changes in authorized contents, or changes in conditions of the approval. Design changes should be clearly identified and

should be included in revised packaging drawings. Packaging that does not conform to the drawings referenced in the NRC approval is not authorized for use under 10 CFR 71.17, "General License: NRC-Approved Package." Likewise, only package contents specified in the approval may be transported. The NRC will likely include package operating procedures, acceptance tests, and a maintenance program, as a condition of the approval.

Verify that an application for modification to an approved design includes an assessment of the requested changes and an explanation of why these changes do not affect the ability of the package to meet the requirements of 10 CFR Part 71. Applications for modifications may be subject to the provisions of 10 CFR 71.19(c) and 10 CFR 71.31(b), as applicable. When an application for modification of a certificate does not have the "-96" designation in the identification number of the NRC certificate, verify that it meets the provision of 10 CFR 71.19(c). Verify that the application includes an explanation of why the requested change is not significant, with respect to the following:

- design, operating characteristics, or safe performance of the containment system when the package is subjected to the tests specified in 10 CFR 71.71, "Normal Conditions of Transport," and 10 CFR 71.73

- prevention of criticality when the package is subjected to the tests specified in 10 CFR 71.71 and 10 CFR 71.73

1.4.1.2 Proposed use and contents

Verify that the description for the proposed use of the packaging and the contents of the package are sufficient to allow the reviewer to understand exactly how the packaging is to be used and what is to be transported. The proposed contents description, as required by 10 CFR 71.33(b), should be sufficient to determine the package category, as discussed in Section 1.4.1.4, below.

1.4.1.3 Package type and model number

Confirm that the application clearly designates the type and model number of the package, as required by 10 CFR 71.33(a)(1). A new Type B transportation package will be designated either B(U)-96 or B(U)F-96, depending on whether the package contains fissile material. If the package has a maximum normal operating pressure greater than 700 kilopascals [100 pounds per square inch] or a pressure-relief device that would allow the release of radioactive material under the tests specified in 10 CFR 71.73 (i.e., hypothetical accident conditions), in those cases, the package will be designated B(M)-96 or B(M)F-96. A new Type A fissile package will be designated AF-96.

Verify that a model number is designated for the package, as required by 10 CFR 71.33(a)(3), and that it is specified on the appropriate drawings.

1.4.1.4 Package category and maximum activity

For Type B packages, verify that the application properly justifies the designated package category. Definitions of package categories are provided in RG 7.11, "Fracture Toughness Criteria of Base Material for Ferritic Steel Shipping Cask Containment Vessels with a Maximum Wall Thickness of 4 Inches (0.1 m)." Detailed justification, including calculation of an effective

A_1 or A_2 from the maximum activity of the contents, might be presented in the appendix or in another section of the application (e.g., Containment).

With respect to the following SRP review procedures, SNF transportation packages are assumed to be Category I. Verify that SNF packages are designated Category I and that the maximum activity of these package contents is specified.

1.4.1.5 Codes and standards

Verify that any proposed codes and standards, as required by 10 CFR 71.33(c), are appropriate for the intended purpose and are properly applied. Ensure that the application identifies established codes and standards or justifies the basis used for the package design and fabrication.

NUREG/CR-3854, "Fabrication Criteria for Shipping Containers," identifies codes and standards that may be used for fabricating components of SNF transportation packaging based on the container contents.

1.4.1.6 Criticality safety index

For a package containing fissile material, verify that the applicant, as required by 10 CFR 71.59(b), has assigned a CSI to the package for each of the package contents and has provided a reference to the relevant section of the application.

1.4.1.7 Quality assurance program

Verify that the applicant, as required by 10 CFR 71.31(a)(3), has provided a description of its quality assurance program or identifies by reference a quality assurance program that has been previously approved under the requirements of 10 CFR 71.17, 10 CFR 71.37, and 10 CFR Part 71, Subpart H.

1.4.2 Package Description

1.4.2.1 Packaging

Review the text description of the packaging, as required by 10 CFR 71.33(a), and verify that the following information, as applicable, is discussed. Sketches, figures, or other schematic diagrams should be used, as appropriate, and include the following:

- general packaging arrangement
- dimensions, including tolerances, and materials of construction
- maximum weight and, if appropriate, the minimum weight
- neutron- and gamma-shielding dimensions and tolerances and material specifications
- personnel barriers, if used

- structural features, such as lifting and tie-down devices, impact limiters or other energy-absorbing features, internal supporting or positioning features, outer shell or outer packaging, and packaging closure devices

- heat transfer features, including fins

- criticality control features, including neutron poisons, moderators, spacers, and items used for geometric confinement

- baskets or other configurations for fuel assemblies or rods, such as damaged fuel cans for geometry control

- containment vessel, which may include welds, drain or fill ports, valves, seals, test ports, pressure-relief devices, lids, cover plates, and other closure devices

- The containment reviewer should, in conjunction with Chapter 4, "Containment Evaluation," of this SRP, ensure that the containment boundary is clearly shown on the drawings. If multiple seals are used for a single closure, verify that the seal defined as the containment system seal is clearly identified

If criticality safety relies on certain components for spacing or confinement of the fissile material to a known geometry, verify that these are defined in packaging drawings, as well as included in the structural evaluation, to ensure performance under normal conditions of transport and hypothetical accident conditions.

1.4.2.2 Operational features

Verify that the application includes the following information as it relates to operational features:

- a discussion on all operational features and functions

- a schematic diagram showing all valves, connections, piping, openings, seals, and containment boundaries

- if needed, detailed operational schematics in accordance with the operations described in the Operating Procedures section of the application

However, details may be referenced in the General Information section of the application if provided in a later application section or appendix. In this case, simplified operational schematics should be an acceptable alternative. In the General Information section of the application, verify that loading configurations for all contents are provided and annotated in a manner consistent with the Structural Evaluation, Containment Evaluation, Thermal Evaluation, Shielding Evaluation, Criticality Evaluation, Materials Evaluation, and Operating Procedures sections of the application. Confirm that a reference is provided to any other section of the application where evaluations of the operability and safety of the operational features are found.

Ensure that the application identifies any codes and standards proposed for controlling the operation of the package and provides a reference to the relevant section of the application that discusses the proposed codes and standards.

1.4.2.3 Contents of packaging

Verify that the package application clearly identifies the contents, as required by 10 CFR 71.33(b), to be authorized for transport and is consistent with the description of the contents in other sections. Ensure that the contents are described at the same level of detail as that intended for the certificate of compliance and in a manner consistent with the package evaluations. The specificity of the contents description may be different for different package types and the safety significance of the contents but should be sufficient to provide a basis for evaluating the package. Review the description of the contents and verify that, at a minimum, the application includes the following information, consistent with the type of package:

- identification and maximum quantity of all radioactive material, including radionuclides, their quantities, and, as needed, mass
- chemical and physical form (e.g., liquid, powder), including density and moisture content, and the presence of other moderating constituents. For Type B quantities of radioactive material in normal form, verify that the applicant specified the chemical and physical form of the material
- identification of whether the contents are special form or normal form
- location and configuration of contents within the packaging, including secondary containers, wrapping, shoring, and other material not defined as part of the packaging
- any material subject to chemical, galvanic, or other reaction, including the generation of combustible gases
- maximum weight and, if appropriate, minimum weight
- maximum decay heat
- for fissile material packages, verify that the application includes the following:
- identification and maximum quantity of fissile material, including the fissile nuclides present and the concentrations, or enrichments, and masses of each
- for packages with fuel assemblies:
    - fuel assembly specifications, including dimensional data for the fuel rods and assembly structure, number of fuel rods per assembly
    - maximum quantity of unirradiated fuel
    - maximum uranium-235 mass per assembly or per rod, as appropriate
    - number of fuel assemblies or rods per package
    - presence of any annular pellets

— maximum initial enrichment, including a description of nonuniform enrichment (e.g., rod-variable enrichments, axial natural or low-enrichment blankets), if applicable

- information on spacers or other features used for geometry control or confinement of fissile material. If these features are needed to demonstrate criticality safety, then ensure they are included in the description of the authorized contents

- identification and quantity of nonfissile materials used as, or that can act as, neutron absorbers (i.e., poison rods) or moderators. Moderators can include polymer fingers (items inserted into fresh fuel assemblies in places to minimize or prevent rod clad fretting from vibration), moisture in powder, plastic inserts or wraps, and foams.

Note that wrapping fresh fuel assemblies with plastic is permitted if the top and bottom are free to allow flow of water sufficient to prevent preferential flooding of the fuel region. If the top and bottom of the fuel assemblies are enclosed, the criticality evaluation should consider preferential flooding.

- In general, if credit is taken for certain parameters (e.g., confinement features, uranium enrichment, chemical form), verify that those parameters are specified in the description of the authorized contents.

- In addition to the above, for SNF packages, verify that the application includes the following:

- the type of SNF and maximum and, as appropriate, minimum initial enrichment; maximum initial uranium-235 mass (for mixed oxide fuel assemblies, plutonium mass, and nuclides)

- maximum burnup, specific power, and minimum cooling time

- control assemblies or other contents (e.g., startup sources) that may be present

- maximum quantities of radionuclides estimated to be available for immediate release within the void space of the fuel rods

- maximum quantity of unirradiated fuel or replacement rods, if any

- a statement of whether SNF with known or suspected cladding defects greater than a hairline crack or a pinhole leak will be placed in a damaged fuel can. Canning of damaged fuel is intended to facilitate handling and to confine gross fuel particles to a known subcritical volume under normal conditions of transport and hypothetical accident conditions

- any unique or unusual conditions (e.g., failed fuel and nonuniform enrichment) or damaged fuel, the maximum quantity of damaged fuel, initial enrichment, and extent of damage

For SNF, NUREG/CR-6716, “Recommendations on Fuel Parameters for Standard Technical Specifications for Spent Fuel Storage Casks,” includes useful information about the fuel parameters that are important for criticality safety and radiation shielding in a transport package.

Parameters that are normally controlled for criticality safety include fuel type, lattice size, enrichment, fuel rod pitch, fuel pellet diameter, cladding thickness, and active fuel length. Parameters that are normally controlled for radiation shielding include some of those controlled for criticality safety as well as burnup, cooling time, uranium mass (or uranium and plutonium mass for mixed-oxide fuel) and nonfuel hardware (e.g., control components). It is not necessary to limit all parameters if the analysis has shown that they are not important for the package evaluation. For example, if the applicant evaluates the criticality safety of the fuel without taking credit for the clad material being present, the minimum clad thickness may not need to be specified.

1.4.3 Summary of Compliance with 10 CFR Part 71

Refer to the specific section of the application to ensure compliance with regulations.

1.4.3.1 General requirements of 10 CFR 71.43

Verify that the package incorporates a tamper-proof seal and the application includes a summary statement indicating compliance with the general standards for all packages. Verify that references to the relevant sections of the application are provided.

1.4.3.2 Condition of package after tests in 10 CFR 71.71 and 10 CFR 71.73

Verify that the application provides summary descriptions for the physical condition of the package subsequent to the tests specified in 10 CFR 71.71 and 10 CFR 71.73. Verify that references to all relevant sections of the application are provided.

1.4.3.3 Structural, Thermal, Containment, Shielding, Criticality, Materials

Verify that the application provides summary statements attesting to the adequacy of the package design to meet the structural, thermal, containment, shielding, criticality, and materials requirements of 10 CFR Part 71.

1.4.3.4 Operational procedures, acceptance tests, and maintenance

Verify that the application provides a summary statement attesting to the adequacy of the development of the operational procedures, acceptance tests, and maintenance program to ensure compliance with the requirements of 10 CFR Part 71.

1.4.4 Certification Approach for Commercial Spent Nuclear Fuel

The provisions of 10 CFR 71.55(e) require that a fissile material package be subcritical under hypothetical accident conditions, assuming, among other things, that the fissile material is in the most reactive credible configuration, consistent with the damaged condition of the package and the chemical and physical form of the contents and water moderation occurs to the most reactive credible extent consistent with the damaged condition of the package and the chemical and physical form of the contents. The guidance in this section applies only to commercial SNF packages, and only to the SNF contents categorized as intact or undamaged fuel,[1] for hypothetical accident conditions. The guidance in this section does not change the review

[1] Note that the International Atomic Energy Agency's Safety Series No. 6, "Regulations for the Safe Transport of Radioactive Material," includes similar, but not identical, requirements for fissile material packages.

practices described elsewhere in this SRP, with respect to damaged SNF or fissile materials other than commercial SNF. The guidance in this section also does not apply to evaluations for compliance with 10 CFR 71.55(b) and so does not change the guidance related to meeting that requirement described elsewhere in this SRP.

Because of the effects of irradiation, the cladding of SNF, and particularly high burnup SNF (i.e., fuel with a burnup greater than 45,000 megawatt-days per metric ton of uranium), may become brittle. If excessively brittle, the cladding could fracture under impact loads currently associated with hypothetical, accident free drop-test conditions; that is, the SNF may not retain its geometric configuration, an important part of ensuring subcriticality. Consequently, the applicant's criticality safety evaluation would need to demonstrate that the package is subcritical for reconfigured SNF assemblies in order to comply with the requirements in 10 CFR 71.55(e)(1) and (2). SNF with nonbrittle cladding that is undamaged has been shown to maintain its geometric configuration under current impact loads associated with hypothetical accident conditions. Therefore, the evaluation of undamaged SNF with nonbrittle cladding can credit the SNF with maintaining its geometric configuration and subcriticality should be demonstrated consistent with the approach described in the other sections and chapters of this SRP. Additional information on cladding mechanical properties is found in Chapter 7, "Materials Evaluation," of this SRP.

The applicant may demonstrate that the package remains subcritical by showing that (i) reconfigured fuel is subcritical even with water inleakage or (ii) the package excludes water under hypothetical accident conditions. Table 1-2 lists the characteristics and objectives of each of these approaches.

Coordinate with the structural, materials, and criticality reviewers to ensure the applicant includes the necessary analyses for and that the analyses adequately support the applicant's selected approach.

1.4.5 Drawings

Examine the engineering drawings. Verify that the information shown on the drawings is consistent with that discussed in the text. Confirm that the criteria provided in Section 1.4 of this SRP have been met.

For each package type described in Appendix A, "Description, Safety Features, and Areas of Review for Different Types of Radioactive Material Transportation Packages," to this SRP, general guidance is provided on the safety functions of the package. Safety features are described, and specific areas of technical review are identified in the text of Appendix A. Technical review should focus on these features. Drawings should clearly identify, with sufficient specificity, components and features that provide a safety function. The degree of specificity should be commensurate with its safety function and the sensitivity of package performance with the particular feature.

In general, the engineering drawings define the design that is authorized for shipment of radioactive material. The packagings used for shipment must conform in all ways to the engineering drawings that are referenced in the certificate of compliance. It is important, therefore, to verify that the drawings capture the safety features that are needed to ensure package performance under normal conditions of transport and hypothetical accident conditions.

Table 1-2 Summary of Approaches for Demonstrating Subcriticality of SNF Under the Requirements of 10 CFR 71.55(e)		
(1) EVALUATIONS BASED ON RECONFIGURED FUEL		
Approach	**Characteristics**	**Objective**
Criticality Assessment of Bounding or Credible Reconfigured Fuel Geometries Assuming Water Inleakage	1. Postulate bounding fuel configurations for criticality. 2. Evaluate criticality and credibility of bounding configurations based on basic structural and material behavior. 3. Reduce reliance on material properties of high-burnup fuel cladding and failure criteria. 4. Perform criticality analyses of reconfigured fuel for bounding configurations.	With water inleakage, demonstrate subcriticality of defined set of credible or bounding fuel configurations based on criticality.
Criticality Assessment of Reconfigured Fuel Geometries Based on Actual Structural and Material Behavior Assuming Water Inleakage	1. Use material properties of high-burnup fuel cladding and failure criteria. 2. Perform nonlinear finite element analysis of fuel assemblies and fuel rods under drop impact conditions. 3. Address failure modes and fuel rod failure distributions (probabilistic approach to the distribution of material properties among fuel rods). 4. Develop credible fuel reconfiguration geometries. 5. Perform criticality analyses of reconfigured fuel from structural analysis results.	With water inleakage, demonstrate subcriticality of credible fuel configurations based on actual structural and material behavior. This requires extensive data for irradiated hydride cladding material properties for high-burnup fuels. These data are currently not available. Therefore, the staff's view is that this approach is currently not practical.
(2) EVALUATIONS BASED ON MODERATOR EXCLUSION		
Approach	**Characteristics**	**Objective**
Criticality Assessment of Reconfigured Fuel Assuming Moderator Exclusion	1. Demonstrate water-tight barrier under hypothetical accident conditions. 2. Perform drop test of package (i) OR inner canister (ii) as described below.	
(i) For Welded Canister-Based Systems: Canister Drop Test as Part of Impact Limiter Testing	1. Include scale model of canister and contents in transport package impact limiter 30-foot drop tests. 2. Perform relative leak-rate testing by testing before and after each drop. 3. Demonstrate leakage rate acceptable to prevent water inleakage.	Conduct physical test of scaled canister to provide added assurance of moderator exclusion under accident conditions.
(ii) For Canister-Based Systems and Direct-Loaded Packages: Bolt Closure System Test as Part of Impact Limiter Testing	1. Include transport package bolt closure system in scale model of package in 30-foot drop tests of the impact limiter. 2. Perform relative leak rate testing by testing before and after each drop. 3. Demonstrate leakage rate acceptable to prevent water inleakage.	Conduct physical test of scaled bolt closure system to provide added assurance of moderator exclusion under accident conditions.

Ensure that reasonable tolerances for dimensions and weights are specified because packaging features may be subject to some variability in fabrication. Not only does this assure the safety performance of each packaging, it also provides flexibility for reasonable variation in the fabrication of the packagings. Furthermore, it is important for demonstrating compliance and facilitating inspection activities. For example, when tolerances are not specified, any slight deviation in dimensions could cause the package to be out of compliance, even though the deviation may not affect safety. Thus, drawings that are well-prepared and include appropriate tolerances facilitate the inspection process.

Engineering drawings often include features that may not contribute to safety, but are part of the package design. These features may be important for other reasons (e.g., ease of handling radioactive material within a facility, product protection, or cosmetic reasons). It is important that flexibility be allowed for these nonsafety features to eliminate unnecessarily restricting or regulating nonsafety significant design features. However, it is often necessary to show the features to ensure that the package configuration is authorized. For these cases, verify that the drawing includes a general representation or optional configurations. The package descriptions in Appendix A discuss the safety importance of certain package features, which varies between designs. For example, the O-ring seals on Type B packages provide a safety function (containment), whereas for a fresh fuel package, the O-ring seals only provide weather protection for product cleanliness. The safety importance of the sealing system design and specificity of the design information for these two packages would therefore be significantly different. Verify that the drawings for the package show the seal surface and O-ring groove details, including surface finish, groove dimensions within strict tolerances, and O-ring size, type, and material. However, when reviewing a fresh fuel package, the applicant's drawing may note the presence of a gasket, but its use may be considered optional for safety in transport.

Some examples of package features that may be important to safety for some designs, but not for others, include paint and coatings; seals, spacers, and dunnage; supplemental radiation shielding; inner containers; outer packagings; impact limiters; or overpacks. For those package features that are not important to safety in a design, the drawings do not need to show detailed information.

NUREG/CR-5502 contains information useful for the technical review of packaging designs and engineering drawings. NUREG/CR-5502 includes information on the purpose of the drawings submitted with the package application and describes recommended format and technical content for these drawings. In general, engineering drawings should focus on the safety features of the package and the components that are important in the performance of the package and in the package evaluation. NUREG/CR-6407, "Classification of Transportation Packaging and Dry Spent Fuel Storage System Components According to Importance to Safety," also contains useful information about the safety significance of packaging components and features. These documents may be useful for the reviewer in determining whether the information provided is sufficiently detailed.

1.4.6 Appendix

There is no specific review procedures for the appendix. The information in the appendix assists the review of the other sections. The appendix may include a list of references and copies of any applicable references not generally available to the reviewer. The appendix may also provide supporting details on special fabrication procedures, material specifications or qualifications (if needed), and other appropriate supplemental information, as needed.

1.5 Evaluation Findings

The safety evaluation report does not normally include specific findings for the General Information section of the application. However, before proceeding with the review of the other sections of the application, verify, at a minimum, that the following criteria have been met:

F1-1 The application describes the package in sufficient detail to provide an adequate basis for its evaluation.

F1-2 Drawings contain information that provides an adequate basis for evaluation against 10 CFR Part 71 requirements. Each drawing is identified, consistent with the text of the application, and contains keys or annotations to explain and clarify information on the drawing.

F1-3 The application for package approval includes either a description of the quality assurance program or a reference to the applicant's approved quality assurance program.

F1-4 The application for package approval identifies applicable codes and standards for the package design, fabrication, assembly, testing, maintenance, and use.

F1-5 Drawings submitted with the application provide a detailed packaging description that can be evaluated for compliance with 10 CFR Part 71 for each of the technical disciplines.

F1-6 The application specifies any restrictions on the use of the package.

F1-7 The description of the contents meets the requirements in 10 CFR 71.63 (for packages with plutonium contents).

F1-8 Any modifications to a previously approved package do not violate the restrictions in 10 CFR 71.19, "Previously Approved Package."

1.6 References

10 CFR Part 71, “Packaging and Transportation of Radioactive Material.”

10 CFR 2.390, “Public Inspections, Exemptions, Requests for Withholding.”

International Atomic Energy Agency, “Regulations for the Safe Transport of Radioactive Material,” Specific Safety Requirements No. 6 (SSR-6), 2012 Edition, Vienna.

Regulatory Guide 7.9, U.S. Nuclear Regulatory Commission, “Standard Format and Content of Part 71 Applications for Approval of Packages for Radioactive Material,” Agencywide Document Access and Management System (ADAMS) Accession No. ML050540321.

Regulatory Guide 7.11, U.S. Nuclear Regulatory Commission, “Fracture Toughness Criteria of Base Material for Ferritic Steel Shipping Cask Containment Vessels with a Maximum Wall Thickness of 4 Inches (0.1 m),” ADAMS Accession No. ML003739413.

NUREG/CR-5502, U.S. Nuclear Regulatory Commission, “Engineering Drawings for 10 CFR Part 71 Package Approvals,” UCRL-10-130438, Lawrence Livermore National Laboratory, Livermore, CA, May 1998.

NUREG/CR-6407, U.S. Nuclear Regulatory Commission, “Classification of Transportation Packaging and Dry Spent Fuel Storage System Components According to Importance to Safety,” INEL-95/0551, Idaho National Engineering Laboratory, Idaho Falls, ID, February 1996.

NUREG/CR-6716, U.S. Nuclear Regulatory Commission, “Recommendations on Fuel Parameters for Standard Technical Specifications for Spent Fuel Storage Casks,” ORNL/TM-2000/385, Oak Ridge National Laboratory, Oak Ridge, TN, March 2001.

2 STRUCTURAL EVALUATION

2.1 Review Objective

The objective of this U.S. Nuclear Regulatory Commission (NRC) structural evaluation is to verify that the applicant has adequately evaluated the structural performance of the package (packaging together with contents) so that it meets the regulations in Title 10 of the *Code of Federal Regulations* (10 CFR) Part 71, "Packaging and Transportation of Radioactive Material."

2.2 Areas of Review

The NRC staff should review the application to verify that it adequately describes the package and includes adequately detailed drawings. In general, the staff should review the following information to determine the adequacy of the package description:

- description of structural design
  - descriptive information including weights and centers of gravity
  - identification of codes and standards
- general requirements for ALL packages
  - minimum package size
  - tamper-indicating feature
  - positive closure
  - package valve
- lifting and tie-down standards for all packages
  - lifting devices
  - tie-down devices
- general considerations for structural evaluation of packaging
  - evaluation by analysis
  - evaluation by test
- normal conditions of transport
  - heat
  - cold
  - reduced external pressure
  - increased external pressure
  - vibration
  - water spray
  - free drop
  - corner drop
  - compression
  - penetration

- hypothetical accident conditions

  — free drop
  — crush
  — puncture
  — thermal
  — immersion—fissile material
  — immersion—all material

- air transport accident conditions for fissile material

  — free drop test
  — crush test
  — puncture test
  — thermal test
  — 90-meter-per-second (m/s) impact test

- special requirements for Type B packages containing more than 10^5 A_2
- air transport of plutonium
- appendix

2.3 Regulatory Requirements and Acceptance Criteria

This section provides a summary of those sections of 10 CFR Part 71 relevant to the structural review areas addressed in this standard review plan (SRP) chapter. Table 2-1 identifies the relevant regulatory requirements and the areas of review covered by this chapter. The reviewer should verify the association of regulatory requirements with the areas of review presented in these tables to ensure that no requirements are overlooked as a result of unique applicant design features.

The structural evaluation seeks to ensure that the transportation package design under review meets the applicable regulatory requirements and fulfills the acceptance criteria. Section 2.4 of this SRP chapter describes the application of the regulations and the acceptance criteria for each of the review areas listed in Table 2-1.

Acceptability of the design of the packages used for the transport of radioactive materials, as described in the application, is based on compliance with the requirements of 10 CFR Part 71 and regulatory guidance.

The package must have adequate structural performance to meet the containment, shielding, subcriticality, and temperature requirements of 10 CFR Part 71 under normal conditions of transport, hypothetical accident conditions, and air transport conditions, as applicable.

2.4 Review Procedures

For the structural evaluation, the NRC staff should ensure that the application adequately describes and evaluates the package design under the normal conditions of transport, the hypothetical accident conditions, and air transport conditions to demonstrate sufficient structural integrity to meet the requirements of 10 CFR Part 71.

Table 2-1 Relationship of Regulations and Areas of Review for Transportation Packages													
Areas of Review	**Applicable 10 CFR Part 71 Structural Regulations**												
	71.31	**71.33**	**71.35**	**71.41**	**71.43**	**71.45**	**71.51**	**71.55**	**71.61**	**71.64**	**71.71**	**71.73**	**71.74**
Description of structural design	(a)(1) (c)	(a),(b)	(a)										
Lifting and tie-down standards for packages						(a),(b)							
General considerations	(a)(2)		(a)		(a) (b),(c) (e)								
Normal condition of transport				(a)	(f)		(a)(1)	(d)(2)			●		
Hypothetical accident conditions				(a)			(a)(2)	(e)				●	
Air transport accident conditions for fissile material								(f)					
Special requirements for Type B packages containing more than 10^5 A_2.									●				
Air transport of plutonium										●			●
Note: The bullet (●) indicates the entire regulation as listed in the column heading applies.													

The structural evaluation is based in part on the descriptions and evaluations presented in the General Information, Thermal, and Materials sections of the application. The results of the structural review are considered in the reviews of thermal, containment, shielding, criticality, operating procedures, and acceptance tests and maintenance program technical areas. Thus, reviews of all the sections of the application take into account the results of the structural evaluation. An example of this information flow for the structural evaluation is shown in Figure 2-1.

2.4.1 Description of Structural Design

2.4.1.1 General

Review drawings and other descriptions of the structural design in the General Information and Structure Evaluation sections of the application. Ensure that the information describes the function, geometry, and material of construction of all structural components of the packaging and its lifting and tie-down devices. The information should be sufficient for evaluating the structural performance of the packaging to meet the regulatory requirements, which include containment, shielding, and maintaining subcriticality of the radioactive contents under the normal conditions of transport and the hypothetical accident conditions. Verify that the data used in the structural evaluation are consistent with those on the drawings and descriptions of the structural design in the application.

Verify that packaging drawings provided in the General Information and Structural Evaluation sections of the application specify the materials of construction, dimensions, tolerances, and fabrication methods of the packaging and subassemblies, receptacles, internal or external

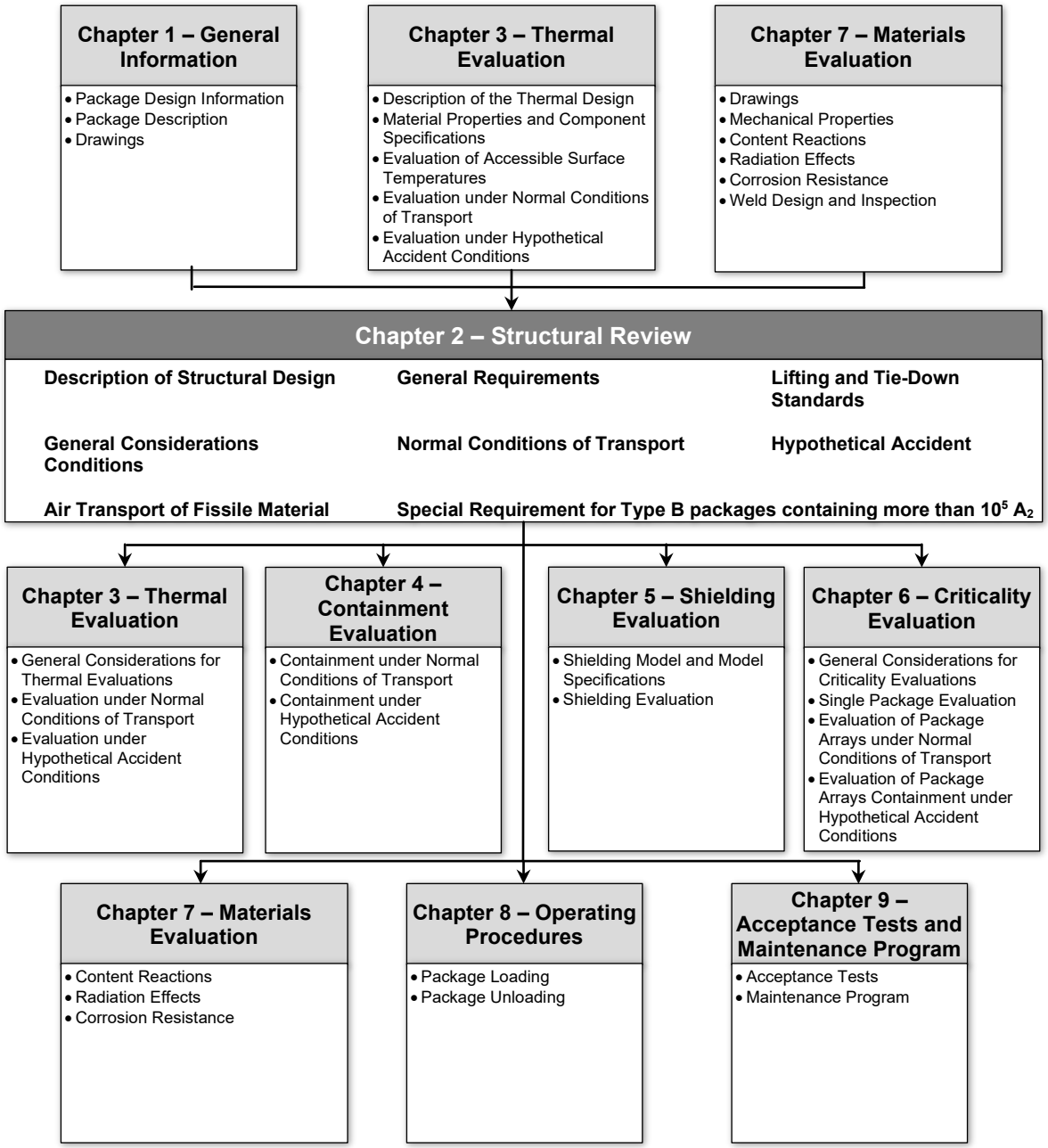

Figure 2-1 Information Flow for the Structural Evaluation

support structures, valves and ports, lifting devices, tie-down devices, and other design features relevant to the structural evaluation. Ensure that the application includes descriptive information, such as the maximum and minimum weight of the package, the maximum weight of the contents, the center of gravity (c.g.) of the package, and the maximum normal operating pressure.

Review the package description presented in the General Information and Structural Evaluation sections of the application. Descriptive information important to structures includes the following:

- dimensions, tolerances, and materials
- code of record and alternatives to specify the American Society of Mechanical Engineers (ASME) Boiler and Pressure Valve (B&PV) Code requirements
- maximum and minimum weights and centers of gravity of packaging and major subassemblies
- maximum and minimum weight of contents, if appropriate
- maximum normal operating pressure
- description of closure system
- description of handling requirements
- fabrication methods, as appropriate

Confirm that the text and sketches describing the structural design features are consistent with the engineering drawings and the models used in the structural evaluation. In accordance with 10 CFR 71.31(a)(1), the structural description must meet the applicable requirements of 10 CFR 71.33(a) and (b).

2.4.1.2 Identification of codes and standards for package design

Verify that the codes and standards are appropriate for the intended purpose and are properly applied. In accordance with 10 CFR 71.31(c), ensure that the application identifies established codes and standards or justifies the basis used for the package design and fabrication. Use the following criteria to verify that the code or standard applies:

- The code or standard was developed for structures of similar design and material, if not specifically for shipping packages.
- The code or standard was developed for structures with similar loading conditions.
- The code or standard was developed for structures that have similar consequences of failure.
- The code or standard adequately addresses potential failure modes.
- The code or standard adequately addresses margins of safety.

NUREG/CR-3854, “Fabrication Criteria for Shipping Containers,” issued March 1985, identifies codes and standards that may be used for fabricating components of spent nuclear fuel (SNF) transportation packaging based on the container contents.

American Society of Mechanical Engineers (ASME) Boiler and Pressure Vessel (B&PV) Code, Section III, Division 3 was developed specifically for the design and construction of the containment systems of a SNF or radioactive waste transportation packaging. The NRC may accept the material, design, fabrication, welding, examination, testing, inspection, and certification of containment systems for SNF transportation packages, in accordance with the B&PV Division 3 Code.

In general, the NRC accepts the use of the most recent code year for the design of shipping packages for new applications. ASME B&PV Code, Section III, Division 1, Subsection NCA-1140 has provisions for the use of ASME B&PV Division 1 code editions, addenda, and cases that apply to both new applications and amendments. ASME B&PV Code, Section III, Division 3, Subsection WA-1140 has provisions for the use of ASME B&PV Division 3 code editions, addenda, and cases for all submissions. The NRC may consider alternatives to this guidance on a case-by-case basis.

If there are any deviations from the ASME B&PV Code, ensure that the application explicitly states the justification for the deviation.

The following NRC regulatory guides (RG) and NUREGs provide guidance for structural design evaluation of packages using information from existing codes and practices:

- RG 7.6, “Design Criteria for the Structural Analysis of Shipping Cask Containment Vessels,” provides design stress criteria for the containment system of Type B packages.

- RG 7.8, “Load Combinations for the Structural Analysis of Shipping Casks for Radioactive Material,” identifies the load combinations to be used in package design evaluation.

- RG 7.9, “Standard Format and Content of Part 71 Applications for Approval of Packages for Radioactive Material,” provides the standard format for the safety analysis report (SAR).

- RG 7.11, “Fracture Toughness Criteria of Base Material for Ferritic Steel Shipping Cask Containment Vessels with a Maximum Wall Thickness of 4 Inches (0.1 m),” and RG 7.12, “Fracture Toughness Criteria of Base Material for Ferritic Steel Shipping Cask Containment Vessels with a Wall Thickness Greater than 4 Inches (0.1 m) But Not Exceeding 12 Inches (0.3 m),” describe criteria for precluding brittle fracture in package containers made of ferritic steels.

- NUREG/CR-6322, “Buckling Analysis of Spent Fuel Basket,” issued May 1995, provides guidance for buckling analysis of SNF baskets.

- NUREG/CR-6007, “Stress Analysis of Closure Bolts for Shipping Casks,” issued April 1992, provides guidance and criteria for design analysis of closure bolts for packages.

- NUREG/CR-3019, “Recommended Welding Criteria for Use in the Fabrication of Shipping Containers for Radioactive Materials,” issued March 1984, presents criteria for transportation package welds.

- Guidance applicable for trunnions is provided in NUREG-0612, “Control of Heavy Loads at Nuclear Power Plants,” issued July 1980, and American National Standards Institute N14.6, “Special Lifting Devices for Shipping Containers Weighing 10,000 Pounds (45,000 kg) or More for Nuclear Materials.”

Attachment 2A to this SRP chapter provides guidance for the review of computational modeling software.

Ensure that the application clearly describes the methodology, approach, and the assumptions used in the buckling analysis of irradiated fuel elements, including Tritium-Producing Burnable Absorber Rods (see Appendix E, “Description and Review Procedures for Irradiated Tritium-Producing Burnable Absorber Rods Packages” to this SRP), under bottom-end package-drop conditions. If the application uses the simplified approach, as described in the Lawrence Livermore National Laboratory report UCID-21246, “Dynamic Impact Effects on Spent Fuel Assemblies,” dated October 20, 1987, ensure that the analysis uses the irradiated fuel properties and the weight of the fuel pellets, in addition to cladding weight, for more realistic results.

Alternatively, an analysis of fuel element integrity, which considers the dynamic nature of the drop accident and any restraints on fuel movement resulting from the package design, is acceptable if it demonstrates that the cladding stress remains below the yield strength. If a finite element analysis is performed, the analysis model may consider the entire fuel element length with intermediate supports at each grid support (spacers). Ensure that the analysis considers irradiated material properties and the weight of fuel pellets.

2.4.2 General Requirements for All Packages

2.4.2.1 Minimum package size

Review the drawings in the application to determine whether the package meets the minimum package size of 10 CFR 71.43(a).

2.4.2.2 Tamper-indicating feature

In accordance with 10 CFR 71.43(b), ensure that the application describes the package closure system in sufficient detail to show that it incorporates a protective feature that, while intact, is evidence that unauthorized persons have not tampered with the package. This description should include covers, ports, or other access that must be closed during normal transportation. Ensure that the description also includes tamper indicators and their location.

2.4.2.3 Positive closure

In accordance with 10 CFR 71.43(c), ensure that the application describes the package closure system in sufficient detail to show that it cannot be inadvertently opened. This description should include covers, valves, or any other access that must be closed during normal transportation.

2.4.2.4 Package valve

In accordance with 10 CFR 71.43(e), ensure that the application describes any valve or other device, the failure of which would allow radioactive contents to escape, in sufficient detail to

determine whether it is protected against unauthorized operation. Ensure that the description includes any enclosure to retain any leakage. This enclosure does not apply to pressure-relief valves.

2.4.3 Lifting and Tie-Down Standards for All Packages

2.4.3.1 Lifting devices

Review the design and evaluation of those lifting devices that are a structural part of the package, their connection with the package body, and the package body in the local area around the lifting devices. Verify that the design, testing, and analyses demonstrate that these devices comply with the following requirements of 10 CFR 71.45(a):

- Any lifting attachment that is a structural part of the package must be designed with a minimum safety factor of three against yielding when used to lift the package in the intended manner.

- Any lifting attachment that is a structural part of the package must be designed so that its failure under excessive load would not impair the ability of the package to meet other requirements.

Verify that the packaging drawings show the location and construction of the lifting devices. Any other structural part of the package that could be used to lift the package must be rendered inoperable for lifting during transport or be designed with strength equivalent to that required for lifting attachments.

2.4.3.2 Tie-down devices

Review the design and evaluation of the tie-down devices that are a structural part of the package, their connection with the package body, and the package body in the local area around the tie-down devices. Verify that the design, testing, and analyses demonstrate that these devices comply with the following requirements of 10 CFR 71.45(b):

- Any tie-down device that is a structural part of the package must be capable of withstanding, without generating stress in any material of the package in excess of its yield strength, a static force applied to the c.g. of the package having a vertical component of 2 times the weight of the package with its contents, a horizontal component along the direction in which the vehicle travels of 10 times the weight of the package with its contents, and a horizontal component in the transverse direction of 5 times the weight of the package with its contents.

- A tie-down device that is a structural part of the package must be designed so that its failure under excessive load would not impair the ability of the package to meet other requirements.

Verify that the packaging drawings show the location and construction of the tie-down devices. Any other structural part of the package that could be used to tie down the package must be rendered inoperable for tying down the package during transport or be designed with strength equivalent to that required for tie-down devices.

2.4.4 General Considerations for Structural Evaluation of Packaging

Review the evaluations in the application to ensure that they demonstrate that the analyses or tests used to evaluate the package under the normal conditions of transport and the hypothetical accident conditions have been adequately performed, and that the structural performance of the package meets the following requirements of 10 CFR 71.41(a):

- The initial conditions (e.g., temperature, pressure, and residue heat) used are the most limiting for test or loading conditions of the packaging (see RG 7.8 for further guidance).
- The evaluation methods employed are appropriate for loading conditions considered and follow accepted practices and precepts.
- Interpretations of evaluation results are correct.
- The drop orientations considered in the evaluation are the most damaging. Note that the most damaging orientation for one component may not be the worst case for another component.
- Design criteria have been properly applied (see RG 7.6 for further guidance).

2.4.4.1 Evaluation by analysis

If the structural evaluation is by analysis, include the following elements, at a minimum, in the review of the application:

- Verify that the application clearly describes the analysis models, methods, and results including all assumptions and input data used. The analysis model should adequately represent the geometry, boundary conditions, loading, material properties, and structural behavior of the packaging analyzed.
- Verify that the applicant provided information on any computer-based modeling, as described in Attachment 2A to this SRP chapter, and review the structural analysis the applicant submitted, in accordance with the attachment.
- Verify that for each structural analysis, the application includes information on any computer-based modeling, as described in Attachment 2A to this SRP chapter, and review the structural analysis the applicant submitted in accordance with the attachment.
- Verify that the material model and properties are appropriate for the analyses. If the analysis is an elastic analysis, ensure that the material also is modeled as an elastic material. If the analysis is inelastic, ensure that the application reflects use of the actual material behavior or a conservative elastic-plastic material model representing the actual material. The application should describe how the material properties were obtained and why the material model is appropriate for the loading conditions considered. For analyses involving large strains, verify that the application reflects use of a stress-strain curve for that material. Wood properties can vary greatly depending on species, orientation (direction of loading with respect to the grain direction), temperature, and moisture content. Refer to Section 7.4.4.4 of this SRP for further information on wood material.

- Verify that the applied (force and displacement) boundary conditions in the analysis model are appropriate. For free-drop impact analyses of packages with “soft” impact limiters, impact loads for package components are usually derived from a rigid-body dynamic analysis of the package and used in a quasi-static analysis of the components. Verify that the applicant applied a dynamic amplification factor to the equivalent static load to account for all vibration effects that have been ignored in the rigid-body dynamic and quasi-static analyses. A summary of the quasi-static and rigid-body dynamic analyses methods for impact analysis is provided in NUREG/CR-3966, “Methods for Impact Analysis of Shipping Containers,” issued November 1987, and UCRL-ID-121673, “Guidelines for Conducting Impact Tests on Shipping Packages for Radioactive Material,” issued September 1995.

- Verify that the solution method is appropriate for the evaluation. If the applicant used a computer program, verify the validity and reliability of the computer program. Ensure that the application describes the solution method, the benchmarking results, and the quality assurance program for maintaining and using the computer code.

- Verify that applicant evaluated the most critical combinations of environmental and loading conditions. At a minimum, ensure that the evaluation covers all the initial and loading conditions listed in RG 7.8. In addition, verify that the applicant evaluated all critical free-drop orientations, assuming that the impact could be at any angle. In general, the drop orientations that should be evaluated consist of two groups: (i) drops that produce the highest g-loads to be used for impact analysis of the package components, and (ii) drops that attack the most vulnerable orientations and parts of the packaging (i.e., bolts, seals, valves, and ports). The first group includes drops with the package c.g. located directly above the center of the impact area. These drops are the end drops, the side drops, and the c.g.-over-corner drops. This group also includes slap-down drops where the package c.g. is not directly above the impact area. A slap-down drop of a long package can produce a high g-load in the second impact because of a whipping action generated by the force of the first impact. The number of drops in the second group will depend on the vulnerability of the packaging components and their structural failure modes. Components vulnerable to impact loads should be protected from direct impacts by employing special design features such as recessed construction, protective cover plate, and impact limiter. Verify that the applicant evaluated the consequences of all credible drops.

- Verify that the analysis results are correctly interpreted or used to demonstrate adequate margins of safety of the structural design. The maximum stresses or strains should be compared with corresponding design allowances specified in the code. Verify that the application shows the response of the package to loads and load combinations in terms of stress and strain to components and structural members. Verify that the applicant evaluated structural stability of individual members, as applicable.

2.4.4.2 Evaluation by test

If the structural evaluation is by test, include the following elements, at a minimum, in the review of the application:

- Verify that the test procedures, test equipment, and the impact pad are adequate for package impact testing. UCRL-ID-121673 provides recommendations for package drop

testing, including the use of reduced-scale models, which are commonly used for testing SNF packages.

- Verify that the test specimen is fabricated using the same materials, methods, quality assurance, and inspection specifications, as stated in the design documents. Ensure that the application identifies any differences and includes an evaluation of the effects. The specimens should include all safety components to be tested as well as components that are expected to significantly affect the test results. Substitutes for the radioactive contents during the tests should have the same structural properties as the actual contents. Verify that the substitutes have the same mass and same interaction with the surrounding packaging component as the actual contents. The same criteria should be used for all other simulated components to ensure that the simulated parts do not alter the test results. Verify that the scale-model test specimen is properly scaled, fabricated, and instrumented (if applicable). In general, scale models do not provide reliable data to determine the leakage rate of the package. Verify that effects related to the size of the scale-model test article are not significant. Verify that the application provides data to show that the size effect can be ignored if a reduced-scale model (smaller than 1/4-scale) is used.

- Review the description of the surface (e.g., material, mass, and dimensions) used for the free-drop and crush test. Confirm that the surface is essentially unyielding, as specified in 10 CFR 71.73(c)(1).

- Review the description of the steel bar (e.g., material, dimensions, orientation, and method of mounting) used for the puncture test. Confirm that the steel bar is securely attached to an essentially unyielding surface, has sufficient length to cause maximum damage to the package, and meets the other specifications of 10 CFR 71.73(c)(3).

- Verify that the selected drop orientations are sufficient for a thorough test of all critical components of the package and the selection is supported by sound analysis or reasoning. Apply the criteria in Section 2.4.4.1 of this SRP for the selection of critical drop orientation for analysis, as appropriate. Verify that the methods and instruments are adequate for the measurements and that the measurements are sufficient for describing the structural response or damage, including both interior and exterior damage of the test specimen.

- Verify that all test results are evaluated and their structural integrity implication interpreted. The test conclusions should be valid and defensible. Discuss with the applicant any unexpected or unexplainable test results, indicating possible testing problems or previously unknown specimen behavior. In each test, ensure the test measurements, damage, and observations are consistent with each other. Identify any inconsistencies and explain their possible causes in the application. Identify any unreliable results and assess the need for additional tests. If the package is permanently deformed or damaged, evaluate the possibility of further damage by subsequent test conditions. In addition, if the final damage is severe, evaluate the margin of safety of the package design against an unacceptable structural failure scenario, such as a sudden or total collapse or rupture. If acceptance tests are performed on the specimen after the structural testing, ensure the acceptance tests are performed according to appropriate codes and standards.

- Review the video and photos of the tests, if available.

- Verify that the tests demonstrate an adequate margin of safety. The test results should clearly show that the effects of the tests can be reliably reproduced. Verify that the description of the test results includes a discussion of the effects of uncertainties in mechanical properties, test conditions, and diagnostics.

- Review the criteria for evaluating pass or fail for the test conditions. Compare the test results with these criteria.

2.4.5 Normal Conditions of Transport

The evaluation of the package under the normal conditions of transport is based on the effects of the tests and conditions specified in 10 CFR 71.71. These tests must not result in a decrease in package effectiveness, as specified in 10 CFR 71.43(f), nor in any of the following conditions:

- loss or dispersal of contents

- structural changes reducing the effectiveness of components required for shielding, for heat transfer, or for maintaining subcriticality or containment

- changes to the package affecting its ability to withstand the hypothetical accident conditions

As required by the initial conditions of 10 CFR 71.71(b), the ambient air temperature before and after the tests must remain near constant, at that value between -29 and +38 degrees Celsius [-20 and +100 degrees Fahrenheit] most unfavorable for the feature under consideration. The initial internal pressure within the containment system must be the maximum normal operating pressure unless a lower internal pressure consistent with the ambient temperature assumed to precede and follow the tests is more unfavorable. Separate specimens may be used for the free-drop test, the compression test, and the penetration test, as long as each specimen is subjected to the water spray test before being subjected to any of the other tests.

Coordinate with the containment reviewer to verify that the applicant demonstrates that there would be no loss or dispersal of radioactive contents, as specified in 10 CFR 71.51(a)(1).

Coordinate with the criticality reviewer, as appropriate, to verify that the applicant demonstrates that the geometric form of the fissile content will not be substantially altered from vibration and a 1-foot drop, as specified by 10 CFR 71.55(d)(2).

See RG 7.8 for the applicability of some of the tests based on the size of the package. The NRC staff has determined that some of the tests from 10 CFR 71.71 may not have any significance for large shipping packages.

2.4.5.1 Heat

Verify that the heat-loading condition, as required by 10 CFR 71.71(c)(1), will not compromise the structural integrity of the package. Confirm that the evaluation of thermal performance and the maximum temperatures under the heat conditions are consistent with the Thermal Evaluation section of the application.

There are two sources of thermal stresses. These stresses can be caused by either spatial temperature gradients in constrained package components or by interference between components from the different thermal expansions of the components.

Review the circumferential and axial deformations and stresses (if any) that result from differential thermal expansion. The evaluation should consider possible interferences resulting from a reduction in gap sizes. Verify that the stresses are within the limits for normal condition loads.

Verify that the evaluations are based on the maximum ambient temperature and the design pressure in combination with the maximum internal heat load. For specified components of the package (e.g., elastomer seal and neutron shield material), coordinate with the appropriate reviewer to evaluate the maximum temperatures and their effect on the operation of the package. In addition, coordinate with the materials reviewer to determine the effect of time and temperature on the structural properties of the materials. The evaluation should demonstrate that repeated cycles of thermal loadings, together with other loadings, will not result in fatigue failure or extensive accumulations of deformations.

2.4.5.2 Cold

Confirm that the evaluation of thermal performance and the maximum temperatures under the cold condition, as required by 10 CFR 71.71(c)(2), are adequate and consistent with the Thermal Evaluation section of the application. Verify that the evaluations consider the minimum internal pressure with the minimum internal heat load (typically assumed to be no decay heat) and any residual fabrication stresses. Verify that the applicant has considered differential thermal expansions that could result in possible geometric interferences. Verify that the applicant also considered possible freezing of liquids.

Verify that the stresses are within the limits for normal condition loads.

2.4.5.3 Reduced external pressure

Confirm that the application adequately evaluates the package design for the effects of reduced external pressure equal to 25 kilopascals (kPa) [3.5 pounds per square inch (psi)] absolute as required by 10 CFR 71.71(c)(3). Verify that the application considers the greatest possible pressure difference between the inside and outside of the package as well as the inside and outside of the containment system.

2.4.5.4 Increased external pressure

Confirm that the application adequately evaluates the package design for the effects of increased external pressure equal to 140 kPa [20 psi] absolute as required by 10 CFR 71.71(c)(4). Verify that the application considers this loading condition in combination with minimum internal pressure. Verify that the application considers the greatest possible pressure difference between the inside and outside of the package as well as the inside and outside of the containment system. Ensure that the applicant has considered the possibility of buckling of the containment boundary.

2.4.5.5 Vibration and fatigue

Confirm that the application adequately evaluates the package design for the effects of vibration normally incident to transport as required by 10 CFR 71.71(c)(5). Verify that the application includes a determination of the acceleration from vibration by test or analysis. The applicant should provide a fatigue analysis for highly stressed systems, considering the combined stresses from vibration, temperature, and pressure loads. If closure bolts are reused, verify that the fatigue evaluation includes the bolt preload. NUREG/CR-6007 provides guidance on bolt evaluation. Verify that a resonant vibration condition, which can cause rapid fatigue damage, is not present in any packaging component. Consider the effect on package internals. Additional guidance for vibration evaluation is provided in NUREG/CR-0128, "Shock and Vibration Environments for a Large Shipping Container during Truck Transport (Part II)," issued May 1978, and NUREG/CR-2146, "Dynamic Analysis to Establish Normal Shock and Vibration of Radioactive Material Shipping Packages," issued October 1983.

2.4.5.6 Water spray

Review the package design for the effects of the water spray test that simulates exposure to rainfall of approximately 5 centimeters [2 inches] for at least 1 hour as required by 10 CFR 71.71(c)(6). Verify that this test does not significantly affect material properties.

2.4.5.7 Free drop

Review the package design for the effects of the free-drop test required by 10 CFR 71.71(c)(7). The application should address factors such as drop orientation; effects of free drop in combination with pressure, heat, and cold temperatures; and other factors discussed in this section.

Review the evaluation of the closure lid bolt design, port cover plates, and other package components for the combined effects of free-drop impact force, internal pressures, thermal stress, and all other concurrently applied forces (e.g., O-ring seal compression force and bolt preload). NUREG/CR-6007 provides guidance on bolt evaluation.

Review the evaluation of other package components, such as port covers, port cover plates, and shield enclosures, for the combined effects of package drop impact force, internal pressures, and thermal stress.

2.4.5.8 Corner drop

Review the package design for the effects of the corner-drop test required by 10 CFR 71.71(c)(8). This test applies only to rectangular fiberboard, wood, or fissile material packages not exceeding 50 kilograms (kg) [110 pounds (lb)] and cylindrical fiberboard, wood, or fissile material packages not exceeding 100 kg [220 lb]. This test is generally not applicable to SNF packages, because of their weight exceedance.

2.4.5.9 Compression

Review the package design for the effects of the compression test required by 10 CFR 71.71(c)(9). This test applies only to packages weighing up to 5,000 kg [11,000 lb]. This test is generally not applicable to SNF packages because their weight exceeds 5,000 kg [11,000 lb].

2.4.5.10 Penetration

Review the evaluation of the package for the penetration condition required by 10 CFR 71.71(c)(10). Verify that the most vulnerable orientation and location of the package have been considered for this test condition.

2.4.6 Hypothetical Accident Conditions

Verify that the evaluation under hypothetical accident conditions is based on a sequential application of the tests specified in 10 CFR 71.73, in the order indicated, to determine their cumulative effect on a package. The evaluation of the ability of a package to withstand any one test must consider the damage that resulted from the previous tests. In addition, as stated above, the tests under normal conditions of transport must not affect the package's ability to withstand the hypothetical accident condition tests.

Coordinate with the containment reviewer to verify that the applicant demonstrated that there would be no loss or dispersal of radioactive contents as specified in 10 CFR 71.51(a)(2).

Coordinate with the criticality reviewer, as appropriate, to verify that the application demonstrates the requirements of 10 CFR 71.55(e).

Confirm that the evaluation demonstrates that the package has adequate structural integrity to satisfy the containment, shielding, and subcriticality requirements of 10 CFR Part 71 under the hypothetical accident conditions, considering the following:

- Inelastic deformation of the containment closure and seal system is generally unacceptable for the containment evaluation.
- Review the deformation of shielding components with respect to the shielding evaluation.
- Review the deformation of components required for heat transfer or insulation, in terms of the thermal evaluation.
- Review the deformation of components required for subcriticality, in terms of the criticality evaluation.

The applicant may use either of two approaches to demonstrate that the package remains subcritical: (i) showing that reconfigured fuel is subcritical even with water inleakage, or (ii) showing that the package excludes water under hypothetical accident conditions. For the first approach, ensure that the applicant developed the reconfigured fuel geometries based on the material properties of the spent fuel cladding and impact loads imposed on the fuel assemblies. For the second approach, ensure that the applicant showed that there would be no inelastic deformation of the containment closure system (e.g., bolt closure or welded region of a canister) under hypothetical accident conditions. Coordinate with the materials and criticality reviewers to determine and evaluate the applicant's approach, in accordance with Chapter 1, "General Information Evaluation," of this SRP.

With respect to the test conditions required by 10 CFR 71.73(b), except for the water immersion tests, verify that the ambient air temperature before and after the tests remains at that value between -29 and +38 degrees Celsius (-20 and +100 degrees Fahrenheit), which is the most

unfavorable for the feature under consideration. The initial internal pressure within the containment system must be the maximum normal operating pressure, unless a lower internal pressure consistent with the selected ambient temperature is less favorable.

2.4.6.1 Free drop

Review the evaluation of the package for the free-drop test as required by 10 CFR 71.73(c)(1). Verify that the applicant evaluated structural integrity for the drop orientation that produces the highest g-load and causes the most severe damage, including c.g.-over-corner, oblique orientation with secondary impact (slap down), side drop, and drop onto the closure. The most damaging orientation for one component might not be the most damaging orientation for another component. If a feature such as a tie-down component is a structural part of the package, verify that it is included in the drop-test configurations and the drop orientation.

Evaluate the effects of lead slump for a package with lead shielding. The lead slump determined by the applicant should be consistent with that used in the shielding evaluation.

Review the evaluation of the closure lid bolt design, port cover plates, and other package components for the combined effects of free-drop impact force, internal pressures, thermal stress, and all other concurrently applied forces (e.g., O-ring seal compression force and bolt preload). NUREG/CR-6007 provides guidance on bolt evaluation.

Review the evaluation of other package components, such as port covers, port cover plates, and shield enclosures, for the combined effects of package drop impact force, internal pressures, and thermal stress.

Review the impact pad used for the free-drop test to ensure that the evaluation used an essentially unyielding pad of adequate size.

Ensure that the applicant has considered buckling of package components.

2.4.6.2 Crush

If applicable, review the evaluation of the package for the dynamic crush condition required by 10 CFR 71.73(c)(2). Verify that the applicant justified its choice for the most unfavorable orientation. This test is only specified for packages with a mass not greater than 500 kg [1,100 lb], density not greater than water, and radioactive contents greater than 1,000 A_2, not as special form material.

This test is generally not applicable to SNF packages.

2.4.6.3 Puncture

Review the evaluation of the package for the puncture test required by 10 CFR 71.73(c)(3). Verify that the application has identified and justified the orientation and location for which maximum damage would be expected. Consider any damage resulting from the free-drop and crush conditions when evaluating this test.

Although analytical methods are available for predicting puncture, empirical formulas derived from puncture test results of laminated panels are sometimes used for determining the package surface-layer thickness required for resisting punctures. The Nelm's formula, developed

specifically for package design, provides the minimum thickness needed for preventing the puncture of the steel surface layer of a typical steel-lead-steel laminated cask wall. NUREG/CR-4554, "SCANS (Shipping Cask Analysis System): A Microcomputer Based Analysis System for Shipping Cask Design Review," Volume 7, issued February 1990, provides an empirical formula for puncture evaluation based on empirical and analytical puncture studies. The formula is applicable for puncture at an angle normal to the surface and at a location away from a stiff support under the surface. The formula is conservative for solid packaging walls, but may be nonconservative for punctures at an oblique angle, where the delivery of the puncture energy is more concentrated than in a right-angle impact. Fortunately, there are few oblique punctures that can involve the total impact energy. In general, oblique punctures may be critical for thin-shelled packages that require only a fraction of the total impact energy to penetrate the packaging wall. Additional considerations in puncture testing are identified in NRC Bulletin 97-02, "Puncture Testing of Shipping Packages Under 10 CFR Part 71," dated September 23, 1997.

Verify that punctures at oblique angles, near a support, at a valve, and at a penetration have been considered in the evaluations, as appropriate.

2.4.6.4 Thermal

Verify that applicant evaluated the structural package design for the effects of a fully engulfing fire, as specified in 10 CFR 71.73(c)(4). Any damage resulting from the free-drop, crush, and puncture conditions must be incorporated into the initial condition of the package for the fire test. Confirm that the determination of the maximum pressure in the package during or after the test considers the temperatures resulting from the fire and any increase in gas inventory caused by combustion or decomposition processes. Verify that the applicant evaluated the maximum thermal stresses, which can occur either during or after the fire, and that the results are consistent with the Thermal Evaluation section of the application.

2.4.6.5 Immersion—fissile material

If the contents include fissile material, subject to the requirements of 10 CFR 71.55, "General Requirements for Fissile Material Packages," and if water inleakage has not been assumed for the criticality analysis, review the evaluation of the damaged test specimen (i.e., after free-drop, puncture, and fire) immersed under a head of water of at least 0.9 meter [3 feet] in the orientation for which maximum leakage is expected, as required by 10 CFR 71.73(c)(5).

2.4.6.6 Immersion—all packages

Review the evaluation of a separate, undamaged specimen subjected to water pressure equivalent to immersion under a head of water of at least 15 meters [50 feet], as required by 10 CFR 71.73(c)(6). For test purposes, an external pressure of water of 150 kPa [21.7 psi] gauge is considered to meet these conditions.

2.4.7 Air Transport Accident Conditions for Fissile Material

In addition to the regulations that govern fissile materials in general (10 CFR 71.55), verify that the package is designed and constructed and its contents limited so that it would be subcritical for air transport, as applicable. Air transport conditions are based on a sequential application of the tests specified in 10 CFR 71.55(f)(1), in the order indicated, to determine their cumulative

effect on a package. Ensure that the evaluation of the ability of a package to withstand any one test considers the damage that resulted from the previous tests.

Review the deformation of components required for subcriticality, in terms of the criticality evaluation. Specifically, the following sections describe the tests to be evaluated.

2.4.7.1 Free drop

Evaluate in accordance with 10 CFR 71.73(c)(1) and as described in Section 2.4.6.1 of this SRP chapter.

2.4.7.2 Crush test

Evaluate in accordance with 10 CFR 71.73(c)(2) and as described in Section 2.4.6.2 of this SRP chapter.

2.4.7.3 Puncture test

Review the evaluation of the package for the puncture test as specified in 10 CFR 71.55(f)(1)(iii). Verify that the application identifies and justifies the orientation and location for maximum damage. Consider any damage resulting from the free-drop and crush conditions when evaluating this test.

2.4.7.4 Thermal Test

Evaluate in accordance with 10 CFR 71.73(c)(4) and as described in Section 2.4.6.4 of this SRP chapter, but with a test duration of 60 minutes rather than 30 minutes.

2.4.7.5 90-meter-per-second Impact

Review the evaluation of the package for the 90 m/s impact test in accordance with 10 CFR 71.55(f)(2). Verify that the applicant has evaluated structural integrity for the drop orientation that produces the highest g-load and causes the most severe damage, including c.g.-over-corner, oblique orientation with secondary impact (slap down), side drop, and drop onto the closure with respect to the criticality evaluation. A separate, undamaged specimen can be used for this evaluation.

2.4.8 Special Requirement for Type B Packages Containing More Than 10^5 A_2

For a package of irradiated nuclear fuel with activity greater than 37 petabecquerel (PBq) [10^6 curies (Ci), 10 CFR 71.61, "Special Requirements for Type B Packages Containing More Than $10^5 A_2$," requires that its undamaged containment system withstand an external water pressure of 2 megapascals (MPa) [290 psi] for a period of not less than 1 hour without collapse, buckling, or inleakage of water. Ensure that the application provides analysis or test results to show that the containment structure will not collapse or buckle within 1 hour after the pressure is applied. This test applies only to the containment system. No structural support from other packaging components should be considered unless the component is an integral part of the containment system. The inleakage requirement has not been met if the stresses around the closure seal region exceed the yield stress limits. Additionally, coordinate with the containment reviewer to ensure that the O-ring and groove is designed for both internal and external pressures.

2.4.9 Air Transport of Plutonium

In addition to applicable fissile material requirements for plutonium, verify that the evaluation under accident conditions is based on sequential application of the tests specified in 10 CFR 71.74, "Accident Conditions for Air Transport of Plutonium," considering the following:

- Rupture of the containment closure and seal system is generally unacceptable for the containment evaluation.
- Review the deformation of shielding components, in terms of the shielding evaluation.
- Review the deformation of components required for heat transfer or insulation, in terms of the thermal evaluation.
- Review the deformation of components required for subcriticality, in terms of the criticality evaluation.

Ensure that the applicant evaluated the tests of 10 CRF 71.74(a), in the order indicated, to determine their cumulative effect on a package. The evaluation of the ability of a package to withstand any one test must consider the damage that resulted from the previous tests.

Confirm that water and ambient conditions for applicable tests are in accordance with 10 CFR 71.64(b)(1)(ii).

Ensure that the applicant used an undamaged package for the individual free-fall-impact test and individual deep submersion test, as specified in 10 CFR 71.74(b) and 10 CFR 71.74(c), respectively.

2.4.10 Appendix

Confirm that the appendix, if included, provides a list of references, copies of applicable references if not generally available to the reviewer, computer code descriptions, input and output files, test results, and other appropriate supplemental information.

If the applicant evaluated the package by test and listed the elements of the test in the appendix, review the test description. The description should include the following elements:

- test procedures
- test package description
- test initial and boundary conditions
- test chronologies—planned and actual
- photographs of the package components, including any structural damage, before and after the tests
- test measurements, including, at a minimum, documentation of test package physical changes as a result of the tests

- test results
- methods used to obtain these corrected results

2.5 Evaluation Findings

Prepare evaluation findings on satisfaction of the regulatory requirements in Section 2.3 of this SRP chapter. If the documentation submitted with the application fully supports positive findings for each of the regulatory requirements, the statements of findings should be similar to the following:

F2-1 The staff has reviewed the package structural design description and concludes that the contents of the application satisfies the requirements of 10 CFR 71.31(a)(1) and (a)(2) as well as 10 CFR 71.33(a) and (b).

F2-2 The staff has reviewed the structural codes and standards used in package design and finds that they are acceptable and therefore satisfy the requirements of 10 CFR 71.31(c).

F2-3 The staff has reviewed the lifting and tie-down systems for the package and concludes that they satisfy the standards of 10 CFR 71.45(a) for lifting and 10 CFR 71.45(b) for tie-down.

F2-4 The staff has reviewed the package description and finds that the package satisfies the requirements of 10 CFR 71.43(a) for minimum size.

F2-5 The staff reviewed the package closure description and finds that the package satisfies the requirements of 10 CFR 71.43(b) for a tamper-indicating feature.

F2-6 The staff reviewed the package closure system and the applicant's analysis for normal and accident pressure conditions and concludes that the containment system is securely closed by a positive fastening device and cannot be opened unintentionally or by a pressure that may arise within the package and therefore satisfies the requirements of 10 CFR 71.43(c) for positive closure.

F2-7 The staff reviewed the package description and finds that the package valve, the failure of which would allow radioactive contents to escape, is protected against unauthorized operation and provides an enclosure to retain any leakage and therefore satisfies the requirements of 10 CFR 71.43(e).

F2-8 The staff reviewed the application and finds that the package was evaluated by subjecting a specimen or scale model to the specific tests, or by another method of demonstration acceptable to the Commission, and therefore satisfies the requirements of 10 CFR 71.41(a).

F2-9 The staff reviewed the structural performance of the packaging under the normal conditions of transport required by 10 CFR 71.71 and concludes that there will be no substantial reduction in the effectiveness of the packaging that would prevent it from satisfying the requirements of 10 CFR 71.51(a)(1) for a Type B package and 10 CFR 71.55(d)(2) for a fissile material package.

F2-10 The staff reviewed the structural performance of the packaging under the hypothetical accident conditions required by 10 CFR 71.73 and concludes that the packaging has adequate structural integrity to satisfy the subcriticality, containment, and shielding requirements of 10 CFR 71.51(a)(2) for a Type B package and 10 CFR 71.55(e) for a fissile material package.

F2-11 The staff reviewed the structural performance of the packaging under the air transport accident conditions for fissile material required by 10 CFR 71.55(f) and concludes that the packaging has adequate structural integrity to satisfy the subcriticality requirements of 10 CFR 71.55(f) for air transport of fissile material.

F2-12 The staff reviewed the packaging structural performance under an external pressure of 2 MPa [290 psi] for a period of not less than 1 hour and finds that the package does not buckle, collapse, or allow the inleakage of water and therefore satisfies the requirements of 10 CFR 71.61.

F2-13 The staff reviewed the packaging structural performance under the accident conditions for air transport of plutonium required by 10 CFR 71.74 and concludes that the packaging has adequate structural integrity to satisfy the subcriticality, containment, and shielding requirements of 10 CFR 71.64, "Special Requirements for Plutonium Air Shipments."

The reviewer should provide a summary statement similar to the following:

> Based on review of the statements and representations in the application, the NRC staff concludes that the package has been adequately described and evaluated to demonstrate that it satisfies the structural integrity requirements of 10 CFR Part 71.

2.6 References

10 CFR Part 71, "Packaging and Transportation of Radioactive Material."

American National Standards Institute, ANSI N14.6–1993, *Institute for Nuclear Materials Management*, "Special Lifting Devices for Shipping Containers Weighing 10,000 Pounds (45000 kg) or More for Nuclear Materials," New York, NY.

American Society of Mechanical Engineers (ASME) Boiler and Pressure (B&PV) Code, 2007—Addenda 2008. Section III, "Rules for Construction of Nuclear Facility Components." Division 3, "Containments for Transportation & Storage of Spent Nuclear Fuel and High Level Radioactive Material & Waste" (no NRC position on this has been established). Division 1, "Metallic Components"; Subsection NCA-1140.

Bulletin 97-02, U.S. Nuclear Regulatory Commission, "Puncture Testing of Shipping Packages under 10 CFR Part 71," Bulletin 97-02, September 23, 1997.

NUREG-0612, U.S. Nuclear Regulatory Commission, "Control of Heavy Loads at Nuclear Power Plants," NUREG-0612, July 1980, Agencywide Documents Access and Management System Accession No. ML070250180.

NUREG/CR-0128, U.S. Nuclear Regulatory Commission, “Shock and Vibration Environments for a Large Shipping Container During Truck Transport (Part II),” SAND78-0337, Sandia Laboratories, Albuquerque, NM, May 1978.

NUREG/CR-2146, U.S. Nuclear Regulatory Commission, “Dynamic Analysis to Establish Normal Shock and Vibration of Radioactive Material Shipping Packages, Volume 3: Final Summary Report,” HEDL-TME 83-18, Hanford Engineering Development Laboratory, October 1983.

NUREG/CR-3019, U.S. Nuclear Regulatory Commission, “Recommended Welding Criteria for Use in the Fabrication of Shipping Containers for Radioactive Materials,” UCR-L53044, Lawrence Livermore National Laboratory, Livermore, CA, March 1984.

NUREG/CR-3854, U.S. Nuclear Regulatory Commission, “Fabrication Criteria for Shipping Containers,” UCRL-53544, Lawrence Livermore National Laboratory, Livermore, CA, March 1985.

NUREG/CR-3966, U.S. Nuclear Regulatory Commission, “Methods for Impact Analysis of Shipping Containers,” UCID-20639, Lawrence Livermore National Laboratory, Livermore, CA, November 1987.

NUREG/CR-4554, U.S. Nuclear Regulatory Commission, “SCANS (Shipping Cask Analysis System): A Microcomputer Based Analysis System for Shipping Cask Design Review,” UCID-20674, Lawrence Livermore National Laboratory, Livermore, CA, February 1990.

NUREG/CR-5502, U.S. Nuclear Regulatory Commission, “Engineering Drawings for 10 CFR Part 71 Package Approvals,” UCRL-10-130438, Lawrence Livermore National Laboratory, May 1998.

NUREG/CR-6007, U.S. Nuclear Regulatory Commission, “Stress Analysis of Closure Bolts for Shipping Casks,” UCR-ID-110637, Lawrence Livermore National Laboratory, Livermore, CA, April 1992.

NUREG/CR-6322, U.S. Nuclear Regulatory Commission, “Buckling Analysis of Spent Fuel Basket,” UCR-LID-119697, Lawrence Livermore National Laboratory, Livermore, CA, May 1995.

Regulatory Guide 7.6, U.S. Nuclear Regulatory Commission, “Design Criteria for the Structural Analysis of Shipping Cask Containment Vessels,” Agencywide Document Access and Management System (ADAMS) Accession No. ML003739418.

Regulatory Guide 7.8, U.S. Nuclear Regulatory Commission, “Load Combinations for the Structural Analysis of Shipping Casks for Radioactive Material,” ADAMS Accession No. ML003739501.

Regulatory Guide 7.9, U.S. Nuclear Regulatory Commission, “Standard Format and Content of Part 71 Applications for Approval of Packages for Radioactive Material,” ADAMS Accession No. ML050540321.

Regulatory Guide 7.11, U.S. Nuclear Regulatory Commission, “Fracture Toughness Criteria of Base Material for Ferritic Steel Shipping Cask Containment Vessels with a Maximum Wall Thickness of 4 Inches (0.1 m),” ADAMS Accession No. ML003739413.

Regulatory Guide 7.12, “Fracture Toughness Criteria of Base Material for Ferritic Steel Shipping Cask Containment Vessels with a Wall Thickness Greater than 4 Inch (0.1 m),” ADAMS Accession No. ML003739424.

UCID-21246. “Dynamic Impact Effects on Spent Fuel Assemblies,” Chun, R., M. Witte, and M. Schwartz, Lawrence Livermore National Laboratory, CA, October 20, 1987.

UCRL-ID-121673. “Guidelines for Conducting Impact Tests on Shipping Packages for Radioactive Material,” Mok, G.C., R.W. Carlson, S.C. Lu, and L.E. Fischer, Lawrence Livermore National Laboratory, Livermore, CA, September 1995.

ATTACHMENT 2A COMPUTATIONAL MODELING SOFTWARE TECHNICAL REVIEW GUIDANCE

Technical Review Guidance

2A.1 Computational Modeling Software Application

The U.S. Nuclear Regulatory Commission (NRC) staff does not endorse the use of any specific type or code vendor of computational modeling software (CMS). Any appropriate CMS application could be used for analyses of cask or package components; however, for any CMS to demonstrate that a particular cask or package design satisfies regulatory requirements, the applicant must demonstrate adequate validation of that CMS. Descriptions of CMS validations can be contained within a given application or incorporated by reference.

Verify that the application or related documentation (such as proprietary calculation packages or benchmark reports) provides the following information:

- details of the methodology used to assemble the computational models and the theoretical basis of the program used
- a description of benchmarking against other codes or validation of the CMS against applicable published data or other technically qualified and relevant data that are appropriately documented
- standardized verification problems analyzed using the CMS, including comparison of theoretically predicted results with the results of the CMS
- release version and applicable platforms

Once the information described above has been docketed, it need not be submitted with each subsequent application but can be referred to in subsequent safety analysis reports (SARs) or related documents. If an applicant changes its analysis methodology or changes the type or vendor of the CMS used, the applicant should submit either a revision of previously submitted information or include a clear explanation of the methodology changes, and their effects on the analysis in question, in subsequent application submittals.

2A.2 Modeling Techniques and Practices

The staff may need to verify the modeling techniques and practices the applicants used to demonstrate adequacy of the model.

Verify that the CMS and the options the applicant used are appropriate for adequately capturing the behavior of a cask, package, or any components.

The original application should include relevant input and results files or an equivalent detailed model description and output.

2A.3 Computer Model Development

Verify that the computer model used for the analysis is adequately described, either in the application or in other documentation, is geometrically representative of the cask or package design being analyzed, has addressed how material and manufacturing uncertainties might affect the analysis, has appropriate boundary conditions, and has no significant analysis errors.

Verify that the model description includes an adequate basis for the selection of parameters and components used in the analysis model (e.g., the reason a particular element type was applied in the analysis model).

Verify that models sufficiently represent cask or package geometry and that adequate justification is provided for simplifications used. Models created with CMS are often simplified to reduce computer processing time. Models can often omit geometric details or use homogenized or smeared material properties to represent complex geometry or material combinations and still retain analytic accuracy. If smeared or homogenized properties are used, verify that the applicant has provided adequate justification for this approach, as the response of the problem can be dramatically altered

Verify that the applicant has discussed how manufacturing and assembly tolerances and contact resistances will affect the analyses that have been conducted, if at all, in both the structural and thermal disciplines. Verify that the applicant has described how tolerances and contact resistances are accounted for, if applicable, in the cask or package analysis models that are submitted for review.

Verify that the applicant provided a general discussion of how error, warning, or advisory messages generated by the software affect the analysis result (if applicable). When processing a computer model developed using CMS, the software will frequently provide error, warning, or advisory messages indicating a possible problem with the model that may or may not be sufficient to terminate processing. If the error or warning function has been disabled during processing, ensure that an explanation of why this is appropriate is provided.

Verify that, within the specific disciplines, the dimensions and physical units used in the models developed are clearly labeled and mutually consistent. Ensure that the fundamental units of time, mass, and length are clearly identified. All other physical units derived must be consistent with the basic units adopted. For example, if the unit of length is the millimeter (mm), time in milliseconds (ms), and mass in gram (gm), then the mechanical force should have units of Newton (N), energy in millijoule (mJ), and stress in megapascal (MPa). Verify that the input parameters are expressed in the units as assigned. If an applicant chooses to not adopt this uniformity of units, ensure that the applicant applied the appropriate conversion before processing the input into CMS. Similar assurances must be provided for the output for the analysis solution.

2A.4 Computer Model Validation

Verify that the application properly documents model validation done with applicable experiments or testing and that appropriate references are provided.

For example, an analytical model's ability to capture relevant model output such as g-loads and plastic deformations can be demonstrated by comparing the physical test data of a similar package that was drop tested. The test data used to validate or benchmark the analytical model

should be similar with regard to the expected package behavior of interest. For instance, a package with impact limiters should be used to benchmark a package that also has impact limiters. Plastic strain data used for validation, for instance, should come from areas of the package where such data are crucial or relevant to the performance of the package, such as the containment boundary. Other details to consider when benchmarking and validating physical data include whether the package is bolted or welded, and whether the response will be dominated primarily by a quasi-static, wave, or impulse-type response. The data source should be readily available or included in the application and describe all the assumptions and simplifications made during physical testing so that the staff can weigh its relevance to the design of interest.

2A.5 Justification of Bounding Conditions/Scenario for Model Analysis

The applicant must determine the most damaging orientation and worst-case conditions for a given design and document how the analytic model was configured for the scenario. Verify that the applicant provided sufficient justification for selecting the most damaging orientation and worst-case conditions.

2A.6 Description of Boundary Conditions and Assumptions

Verify, as necessary, that the textual description included in the application or other documents addresses boundary conditions such as an unyielding surface in a drop scenario. The textual description should also include justifications and bases for such items. Ensure appropriate material (temperature dependent) properties are used.

2A.7 Description of Model Assembly

Verify that the application lists the types of elements used in the model along with the corresponding materials or components in which they are used in the analysis model. The application should present the elements and materials associated with specific components of the analysis model to enable a quick assessment.

Verify that the applicant provided a sufficient explanation of the logic behind the creation of each specific computer model (such as the mesh) so that effective confirmatory calculations can be performed.

Input files should be provided for the models used in the analysis. If input files are not provided or do not adequately describe model assembly, ensure that the applicant has provided in the appropriate application sections or related documents an adequate explanation of how computer models were assembled using the CMS.

2A.8 Loads, Time Steps, and Impact Analyses

Verify that the applicant has clearly explained the loads, load combinations, and, if used by the analytical code, the load steps used in the computer model. Evaluate all loads, how they are placed on the computer models, load combinations, and, if used, the time steps applied in the analysis.

Verify that the time steps specified for the solution of the analysis are sufficiently small to accurately capture the behavior of the structures, systems, or components being modeled.

For impact analyses using software such as LS-DYNA, examine the output files for hour-glassing energy in each part of the system, in addition to the package as a whole. Verify that impact analyses output is realistic. If the parts in a model contact each other, they should exhibit deformation and penetration as appropriate. Disassemble the model by component and examine them for breaches or other unseen damage. For instance, components can be perforated, but this damage may be hidden from view by other components in the model.

2A.9 Sensitivity Studies

Verify that the discussion of the general development of the computer model covers sensitivity studies, with relevant references to examples included in the application or related documents.

Verify that the applicant has completed sensitivity studies for relevant CMS modeling parameters. This includes element type and mesh density, load-step size, interfacing gaps or contact friction, material models and model parameters selection, and property interpolation, if applicable. For example, a mesh sensitivity study should be conducted not only for mesh density but also for mesh density and refinement in areas of thermal or structural concern or where performance of the material is crucial, such as seal areas and lid bolts. A mesh sensitivity is also needed to make sure the analysis results are mesh independent.

Verify that the application or related documentation clearly describes the results of applicable sensitivity studies and that the sensitivity studies can be independently verified, if necessary.

Verify that the applicant's documentation includes at least a brief discussion of the different models used in its mesh sensitivity studies.

2A.10 Results of the Analysis

Verify that the application or related documents includes all relevant results (tabular and computer plots) for applicable load cases and load combinations evaluated for design code compliance, and that the tables and plots clearly identify all governing results (stresses, deformation).

Verify that results are consistent throughout the application, and that the correct results are used in calculations of other cask or package performance.

3 THERMAL EVALUATION

3.1 Review Objective

The objective of the U.S. Nuclear Regulatory Commission's (NRC's) thermal evaluation with regard to heat transfer and flow is to ensure that the applicant has adequately evaluated the thermal performance of the transportation package design under review for the thermal tests specified under normal conditions of transport, short-term operations (e.g., drying, backfilling), and hypothetical accident conditions, and that the package design meets the thermal performance requirements of Title 10 of the *Code of Federal Regulations* (10 CFR) Part 71, "Packaging and Transportation of Radioactive Material."

3.2 Areas of Review

The NRC staff should review the application to verify that it adequately describes the package and includes adequately detailed drawings. In general, the staff should review the following information to determine the adequacy of the package description.

- description of the thermal design
  - packaging design features
  - codes and standards
  - content heat load specification
  - summary tables of temperatures
  - summary tables of pressures in the containment vessel
- material properties and component specifications
  - material thermal properties
  - specifications of components
  - thermal design limits of package materials and components
- general considerations for thermal evaluations
  - evaluation by analyses
  - evaluation by tests
  - confirmatory analyses
  - effects of uncertainties
  - conservatisms
- evaluation of accessible surface temperatures
- thermal evaluation under normal conditions of transport
  - heat and cold
  - maximum normal operating pressure

- thermal evaluation under hypothetical accident conditions
    - initial conditions
    - fire test
    - maximum temperatures and pressures
- appendix

3.3 Regulatory Requirements and Acceptance Criteria

This section provides a summary of those sections of 10 CFR Part 71 relevant to the thermal review areas addressed in this standard review plan (SRP) chapter. The NRC staff reviewer should refer to the exact language in the regulations. Table 3-1 matches the relevant regulatory requirements to the areas of review covered in this chapter. The reviewer should also verify the association of regulatory requirements with the areas of review presented in the table to ensure that no requirements are overlooked as a result of unique applicant design features.

The thermal evaluation seeks to ensure that the transportation package design under review meets the applicable regulatory requirements and fulfills the acceptance criteria.

The package must have adequate thermal performance to meet the containment, shielding, subcriticality, and temperature requirements of 10 CFR Part 71, under normal conditions of transport, short-term operations (e.g., drying, backfilling), and hypothetical accident conditions.

3.3.1 Description of the Thermal Design

The applicant must describe the package in sufficient detail to provide an adequate basis for its evaluation, as stated in the following regulations:

> 10 CFR 71.31, “Contents of Application,” specifically: 10 CFR 71.31(a)(1) and
> 10 CFR 71.33, “Package Description,” specifically: 10 CFR 71.33(a)(5), 71.33(a)(6), 71.33(b)(1), 71.33(b)(3), 71.33(b)(5), 71.33(b)(7), and 71.33(b)(8)

The safety analysis report (SAR) must identify established codes and standards applicable to the thermal design. [10 CFR 71.31(c)]

The thermal design must not depend on a mechanical cooling system to meet the containment requirements of 10 CFR 71.51(a). [10 CFR 71.51(c)]

3.3.2 Material Properties and Component Specifications

The applicant must describe the package in sufficient detail to provide an adequate basis for its evaluation, as stated in the regulations listed below.

> 10 CFR 71.31(a)(1), 10 CFR 71.33(a)(5), and 10 CFR 71.33(b)(3)

In addition to the regulatory requirements identified in the above paragraph, the temperatures of the materials and components used in the package should not exceed their specified maximum allowable temperatures.

Table 3-1 Relationship of Regulations and Areas of Review for Transportation Packages

Areas of Review	10 CFR Part 71 Regulations											
	71.31 (a)(1)	71.31 (a)(2)	71.31 (c)	71.33 (a)(5)	71.33 (a)(6)	71.33 (b)(1)	71.33 (b)(3)	71.33 (b)(5)	71.33 (b)(7)	71.33 (b)(8)	71.35(a)	71.41(a)
Description of the thermal design	●		●	●	●	●	●	●	●	●		
Material properties and component specifications	●			●			●					
General considerations for thermal evaluations		●									●	●
Evaluation of accessible surface temperatures (for SNF)												
Thermal evaluation under normal conditions of transport												
Thermal evaluation under hypothetical accident conditions												

Areas of Review	10 CFR Part 71 Regulations										
	71.41(a)	71.43(f)	71.43(g)[a]	71.51 (a)(1)	71.51(c)	71.55(f)	71.64	71.71 (c)(1)[b]	71.71 (c)(2)[b]	71.73 (c)(4)[c]	71.74
Description of the thermal design					●						
Material properties and component specifications											
General considerations for thermal evaluations	●										
Thermal evaluation of accessible surface temperatures (for SNF)			●								
Thermal evaluation under normal conditions of transport		●		●				●	●		
Thermal evaluation under hypothetical accident conditions						●	●			●	●

[a]Temperature limits for nonexclusive-use shipments are assumed not to apply to SNF packages.
[b]10 CFR 71.71, “Normal Conditions of Transport", primarily 71.71(c)(1) and 71.71(c)(2), for SNF packages.
[c]10 CFR 71.73, “Hypothetical Accident Conditions,” primarily 71.73(c)(4), for SNF packages.
Note: 10 CFR 71.33, 71.71, and 71.73 are applicable, in their entirety, to transportation packages for radioactive materials. The bullet (●) indicates the entire regulation as listed in the column heading applies.

3.3.3 General Considerations for Thermal Evaluations

The applicant must properly evaluate the package to demonstrate that it satisfies the thermal requirements specified in 10 CFR Part 71, Subpart E, under the conditions and tests of Subpart F. [10 CFR 71.31(a)(2), 10 CFR 71.35(a), and 10 CFR 71.41(a)]

The package must be evaluated to demonstrate that any system for containing liquid is adequately sealed and has adequate space (i.e., ullage) or other specified provision for expansion of the liquid. [10 CFR 71.87(d)]

The models used in the applicant's thermal evaluation should be described in sufficient detail to permit an independent review, with confirmatory calculations, of the package thermal design.

3.3.4 Evaluation of Accessible Surface Temperatures

The package must be designed, constructed, and prepared for shipment so that the accessible surface temperature of a package in still air at 38 degrees Celsius (°C) [100 degrees Fahrenheit (°F)] in the shade will not exceed 85 °C [185 °F] in an exclusive-use shipment or 50 °C [122 °F] in a nonexclusive-use shipment. [10 CFR 71.43(g), 10 CFR 71.87(k)] (nonexclusive-use shipments are assumed not to apply to SNF packages.)

3.3.5 Thermal Evaluation Under Normal Conditions of Transport

The applicant must evaluate the package design to determine the effects of the conditions and tests under normal conditions of transport. The ambient temperature preceding and following the tests must remain near constant at that value between -29 °C [-20 °F] and +38 °C [100 °F], which is the most unfavorable condition for the feature under consideration [10CFR 71.71(b)]. The initial internal pressure within the containment system must be considered to be the maximum normal operating pressure (MNOP), unless a lower internal pressure consistent with the ambient temperature considered to precede and follow the tests is more unfavorable.

The conditions and tests of 10 CFR 71.71(c)(1) and 10 CFR 71.71(c)(2) for heat and cold, respectively, are the primary thermal tests for normal conditions of transport. [10 CFR 71.71, "Normal Conditions of Transport"]

The package must be designed, constructed, and prepared for transport so that there will be no significant decrease in packaging thermal effectiveness under the tests specified in 10 CFR 71.71. [10 CFR 71.43(f) and 10 CFR 71.51(a)(1)]

The package must have adequate thermal performance to meet the containment, shielding, subcriticality, and temperature requirements of 10 CFR Part 71 under normal conditions of transport.

3.3.6 Thermal Evaluation Under Hypothetical Accident Conditions

The package must have adequate thermal performance to meet the containment, shielding, subcriticality, and temperature requirements of 10 CFR Part 71 under hypothetical accident conditions. The applicant must evaluate the package design to determine the effects of the conditions and tests under a hypothetical accident (fire). This accident includes a sequence of incidents (impact, crush, puncture, thermal, and immersion) on a package (the crush test is generally not applicable to packages for SNF). Except for the water immersion tests, the

ambient temperature preceding and following the tests must remain constant at that value between -29 °C [-20 °F] and +38 °C [100 °F], which is the most unfavorable condition for the feature under consideration [10 CFR 71.73(b)]. The initial internal pressure within the containment system must be considered to be the MNOP, unless a lower internal pressure consistent with the ambient temperature considered to precede and follow the tests is more unfavorable. The 30-minute, 800°C [1,475°F] fire test of 10 CFR 71.73(c)(4) on a damaged package is the primary thermal test for hypothetical accident conditions. [10 CFR 71.73]

The applicant must properly evaluate a fissile package designed for air transport to demonstrate that it can remain subcritical after undergoing the thermal test in 10 CFR 71.73(c)(4), except that the duration of the test must be 60 minutes. [10 CFR 71.55(f)(1)(iv)]

The applicant must properly evaluate a package designed for air transport of plutonium to demonstrate that it will meet the performance test requirements of 10 CFR 71.74, "Accident Conditions for Air Transport of Plutonium," in accordance with the requirements in 10 CFR 71.64, "Special Requirements for Plutonium Air Shipments." These tests include physically exposing the package to pool fire for 60 minutes.

When evaluating a package with special-form radioactive material (RAM), reviewers should recognize that the requirement for maintaining 800 °C [1,475 °F] for the 10-minute heat test of 10 CFR 71.75(b)(4) applies only to the special form content and is not equivalent to the thermal test of the package described in 10 CFR 71.73(c)(4) (i.e., 800 °C for 30 minutes).

3.4 Review Procedures

As part of the thermal evaluation, verify that the application adequately describes and evaluates the package design for the thermal tests specified under normal conditions of transport and hypothetical accident conditions, and that it meets the thermal performance requirements of 10 CFR Part 71.

For all packages, the thermal evaluation is based in part on the descriptions and evaluations presented in the General Information, the Structural Evaluation, Shielding Evaluation, and Materials Evaluation chapters of the safety analysis report (SAR). Similarly, the reviewer should consider the results of the thermal evaluation when reviewing the Structural Evaluation, Containment Evaluation, Shielding Evaluation, Criticality Evaluation, Operating Procedures Evaluation, and Acceptance Tests and Maintenance Program Evaluation chapters of the SAR.

Figure 3-1 shows an example of information flow for the thermal evaluation.

The thermal evaluation results could indicate that special additional conditions in the certificate of compliance (CoC) (i.e., types of transport modal restrictions such as no air shipments, minimum ambient temperature for transport, and package leakage testing) are required. Verify that these conditions are consistent with the results from the thermal evaluation.

Radioactive Materials

The review procedures for RAM are generally applicable to the thermal evaluation of both low-enriched uranium (LEU)-RAM and mixed oxide (MOX)-RAM packages. There may be some differences in emphasis in the thermal review procedures that arise from generic

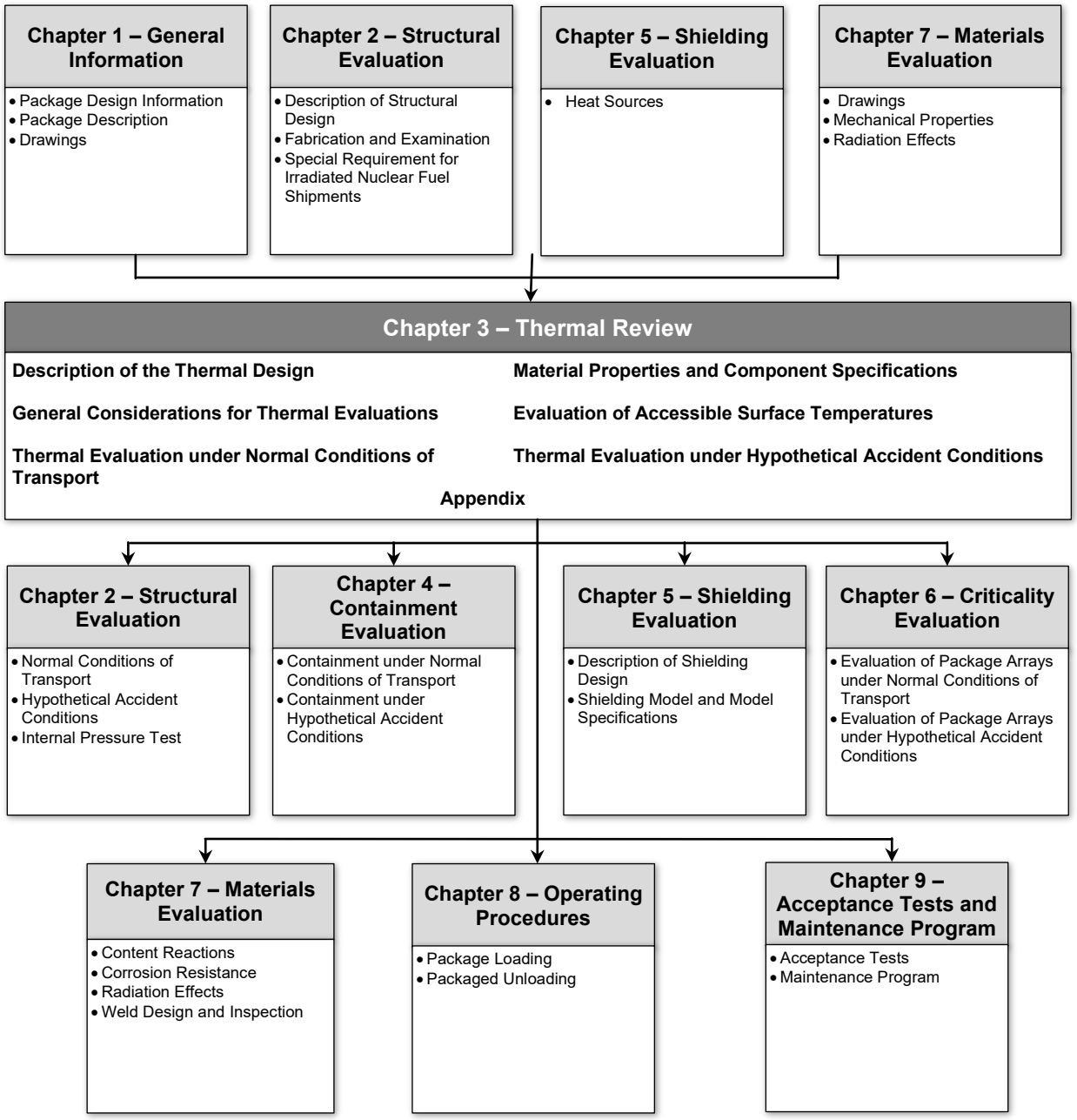

Figure 3-1 Information Flow for the Thermal Evaluation

differences between LEU-RAM and MOX-RAM packaging and contents. Plutonium has a higher specific activity of energetic and short-ranged decay particles (approximately 5 million electron volt alphas) than LEU-RAM does. This results in higher specific content decay heat rates in the MOX-RAM packages than in other LEU-RAM packages (see Appendix B, "Differences Between Thermal and Radiation Properties of MOX and LEU Radioactive Materials," to this SRP, Attachment 3, "Differences between Thermal and Radiation Properties of MOX and LEU Radioactive Materials"). Also, MOX-fresh-fuel rods and assemblies may need

special attention in some of the review procedures provided in this SRP section. The review procedures include the special considerations or attention needed for MOX-RAM packages.

Appendix A to this SRP provides a description for each of the various transportation package types containing RAM and states the safety functions and features. Regarding the areas of safety review, for each package type, the thermal evaluation (and, depending on the safety features, sometimes in conjunction with structural and containment evaluations) is addressed.

Contents that are authorized for transport should be clearly identified in the package application, typically in the General Information section. Applicants are encouraged to include a contents description suitable for inclusion in a CoC. The contents description should be consistent with the package evaluation. The specificity of the contents description may be different for different package types and the safety significance of the contents.

Spent Nuclear Fuel

The review procedures for SNF are generally applicable to the thermal evaluation of both LEU-SNF and MOX-SNF transportation packages. No significant deviations exist in the review procedures and considerations for the two packages. Because packages for shipment of SNF are generally intended to be shipped by exclusive-use, only exclusive-use shipments are assumed in the following SRP review procedures.

3.4.1 Description of the Thermal Design

3.4.1.1 Packaging design features

Verify that all text, drawings, figures, and tables describing the thermal features in the Thermal Evaluation chapter of the SAR are consistent with those of the General Information chapter, as well as those used in the applicant's thermal evaluation. Particular emphasis should be placed on the consistency of the component dimensions, materials, and material properties.

Review the general description of the package presented in the General Information chapter of the SAR and any additional description of the thermal design in the Thermal Evaluation chapter of the SAR. Verify that the package description in the General Information chapter of the SAR includes the following:

- package geometry and materials of construction
- the structural and mechanical features that may affect heat transfer, such as cooling fins, insulating materials, surface conditions of the package components, and gaps or physical contacts between internal components
- a description of any structural and mechanical means for the transfer and dissipation of heat
- the identity and volumes of receptacles containing liquid (e.g., contents, neutron absorber)
- the MNOP of the containment system
- the maximum amount of content-decay heat

Verify that the thermal design does not depend on the presence of a mechanical cooling system to ensure containment.

3.4.1.2 Codes and standards

Verify that the application identifies established codes and standards used in all aspects of the thermal design and evaluation of the package, including material properties and components.

3.4.1.3 Content heat load specification

Verify that the maximum decay heat of the package contents reported in the Thermal Evaluation section of the application is consistent with the decay heat and other contents specifications in the General Information section of the application and that this heat load is appropriately considered in all thermal evaluations.

Coordinate with the shielding reviewer to review the method in which the actual heat load is determined and to ensure that the heat load is properly determined for the maximum allowed radioactive contents; for SNF, this means the content specifications of burnup, enrichment, and cooling time that result in the maximum decay heat load. If the heat load is based on the mass and decay energies of the contents, verify, in consultation with the shielding reviewer, that the applicant properly determined such. The computer codes discussed in Section 5.5.2 of this SRP for determination of neutron and gamma sources are often useful for calculating content decay heat loads. These codes are especially useful for SNF that contains a large number of radionuclide species. Consider the information in Appendix C to this SRP for reviews of MOX-SNF. For example, depending on the grade of plutonium in the MOX-SNF, the decay heat for MOX-SNF may be significantly larger than for LEU-SNF.

3.4.1.4 Summary tables of temperatures

<u>Radioactive Materials</u>

Confirm that summary tables of the maximum, minimum, and allowable temperatures that affect structural integrity, containment, shielding, and criticality are presented for both normal conditions of transport and hypothetical accident conditions. For the fire-test condition, the tables should also include the following:

- the maximum temperatures and the time at which they occur after fire initiation
- the maximum temperatures of the post-fire steady-state condition

Coordinate with the structural and containment reviewers to confirm that these temperatures are consistent.

Ensure that the summary tables of the temperatures of package components including, but not limited to, the fuel and cladding, basket, impact limiters, containment vessel, seals, shielding, and neutron absorbers are consistent with the temperatures presented in the General Information and Structural Evaluation chapters of the SAR for the normal conditions of transport and hypothetical accident conditions.

Spent Nuclear Fuel

Confirm that summary tables of the temperatures of package components including, but not limited to, the fuel and cladding, basket, impact limiters, containment vessel, seals, shielding, and neutron absorbers are consistent with the temperatures presented in the General Information and Structural Evaluation chapters of the SAR for the normal conditions of transport and hypothetical accident conditions. Confirm that the summary tables contain the design temperature limits for each of the components for the normal conditions of transport and hypothetical accident conditions. For the hypothetical accident condition fire, ensure that these summarized temperatures also include the maximum temperatures after fire, the elapsed time from the beginning of the fire to the occurrence of these maximum temperatures, and the post-fire steady-state temperatures of each package component. Confirm that the temperatures and design temperature limit criteria for the package components are consistent throughout the appropriate chapters of the SAR.

3.4.1.5 Summary tables of pressures in the containment system

Coordinate with the structural and containment reviewers to verify that summary tables of the pressure in the containment system under the normal conditions of transport and hypothetical accident conditions are consistent with the pressures presented in the General Information, Structural Evaluation, Containment Evaluation, and Acceptance Tests and Maintenance Program chapters of the SAR. Ensure also that the tables present the design pressure limits of the package components at the temperatures producing the pressures.

3.4.2 Material Properties and Component Specifications

3.4.2.1 Material thermal properties

Confirm that the application presents the thermal properties necessary to calculate thermal transport in the package as well as from the package to the environment. These properties include, but are not limited to, the following:

- thermal conductivity
- specific heat
- density
- emissivity

Verify that the thermal emissivities are appropriate for the specific package surface conditions. The thermal radiation absorptivity on the external packaging surface may be conservatively assumed to be unity to compensate for changes in the package surface from dirt, weathering, and handling during its lifetime. Consideration of a proposed value of less than unity in the SAR should be based on the demonstration that controls and procedures will be in place to ensure such a value throughout the package lifetime. Periodic visual examination followed by paint touch-up or washing may be sufficient if the absorptivity takes adequate account of weathering. These controls and procedures should appear in the Operating Procedures and Acceptance Tests and Maintenance Program chapters of the SAR.

Verify that, for surrounding air and any fluids present within the package, the following additional properties are presented:

- viscosity
- Prandtl number

Confirm that the given fluid properties are adequate for evaluating thermal convection parameters such as the Prandtl number (a dimensionless number defined as the ratio of the momentum diffusivity to the thermal diffusivity), which can be determined from the other thermal properties presented.

Confirm that the thermomechanical properties of any packaging material that may cause temperature-induced pressures or stresses within the package materials are presented. These properties include, but are not limited to, the following:

- coefficient of thermal expansion
- modulus of elasticity
- Poisson's ratio

The coefficient of thermal expansion is usually the linear coefficient for isotropic solids and the volumetric coefficient for fluids. For an isotropic material, the linear coefficient is one-third the volumetric coefficient.

Coordinate with the structural reviewer to ensure that the structural properties that affect thermal stresses are consistent with the values reported in the Structural Evaluation chapter of the SAR.

If a package material is anisotropic, confirm that the application includes the directional properties of, for example, the thermal conductivity, modulus of elasticity, and the linear expansion coefficient.

Confirm that the application presents temperatures at which phase changes, radiolysis/decomposition, dehydration, and combustion will occur, along with thermal and thermomechanical properties resulting from the change.

Confirm that the thermal properties used for the analyses of the package are appropriate for the material specified for the package in the General Information chapter of the SAR and are consistent with those used in the Structural Evaluation chapter of the SAR. Verify that the sources of the thermal properties used in the SAR are referenced. Authoritative sources of material properties data include, but are not limited to, those that reference experimental measurements. In general, textbooks are an unacceptable source of material properties data. If the applicant experimentally measures the thermal properties of the material and components used in the package, ensure that the experiments are performed under an approved quality assurance program.

Confirm the appropriateness of the use of temperature-dependent thermal properties in an analysis of the package response to thermal loads. If the material properties are not presented as a function of temperature, verify that the value conservatively under- or over-predicts temperatures or stresses, as appropriate, compared to the equivalent temperature-dependent property.

3.4.2.2 Specifications of components

Confirm that the maximum allowable service temperatures or pressures are specified for each package component, as appropriate. Ensure that specifications are provided for applicable package components (e.g., pressure-relief valves and fusible plugs).

Verify that the application identifies references for the specifications of package components such as O-rings, pressure-relief valves, and bolts. Confirm also that the application identifies any temperature constraints on the function of the components (such as the allowable stress in a bolt). Verify that the minimum allowable service temperature of all components is less than or equal to -40 °C [-40 °F], unless a minimum heat load is specified (see Section 3.4.5.1 of this SRP chapter).

3.4.2.3 Thermal design limits of package materials and components

<u>Spent Nuclear Fuel</u>

Confirm that the application specifies the maximum allowable temperatures for each component that could affect the containment, shielding, and criticality functions of the package. Acceptable maximum allowable cladding temperature limits are provided Section 7.4.14.2 of this SRP. Verify that the limits specified in the application are consistent with this section.

Verify that the maximum allowable fuel and cladding temperature is justified. The justification should consider the fuel and clad materials, irradiation conditions (e.g., the absorbed dose, neutron spectrum, and fuel burnup), and the shipping environment including the fill gas. Other necessary considerations include the elapsed time from removal of the SNF from the core to its placement into the transportation packaging, its time duration in the packaging, and its post-transport disposition (e.g., storage). Examples of temperature limits include, but are not limited to, the following:

- the temperature limit for metal fuel less than the lowest melting point eutectic of the fuel
- the temperature limit on the irradiated clad in an inert gas environment, as determined by creep, creep rupture, or diffusion-controlled cavity growth (Levy et al. 1987; Schwartz and Witte 1987), as appropriate

Verify that the temperature range of the thermal and structural properties for each package material exceed the specified and predicted temperature limits for the material.

3.4.3 General Considerations for Thermal Evaluations

Thermal evaluations of the package design can be performed by either analysis or test, or by a combination of both. Verify that the package is modeled in the manner in which it is transported (e.g., with or without a container compliant with the International Organization for Standardization). If the package is shipped in an ISO-compliant container, verify that the CoC explicitly states this requirement.

The use of analysis to evaluate the thermal performance of a package will allow any associated conservatisms, uncertainties, and analytical errors to be determined. Note that because of their mass and cost and the difficulty of decay-heat simulation, SNF packages are normally evaluated by analysis.

Review the Structural Evaluation and Thermal Evaluation chapters of the SAR to determine the response of the package to the normal conditions of transport and hypothetical accident conditions. Verify that the corresponding models used in the thermal analyses are consistent with the effects of normal and accident conditions. For example, the package might have impact limiters or an external neutron shield that would be damaged during the structural and thermal tests of 10 CFR 71.73.

3.4.3.1 Evaluation by analyses

For each thermal analysis, verify that the applicant has provided information on any computer-based modeling, as described in Attachment 2A to Chapter 2, "Structural Evaluation," of this SRP, and evaluate the thermal analyses the applicant submitted, in accordance with the attachment.

Further guidance for reviewing computational fluid dynamics and heat transfer applications for transportation package thermal evaluations is provided in NUREG-2152, "Computational Fluid Dynamics Best Practice Guidelines for Dry Cask Applications," issued March 2013. When warranted, confirm that the application provides solution verification results by calculating the grid convergence index (GCI). Guidance to calculate the GCI is provided in NUREG-2152 and the American Society of Mechanical Engineers' (ASME's) "Standard for Verification and Validation in Computational Fluid Dynamics and Heat Transfer" (ASME V&V 20).

Verify that the GCI calculation follows the assumptions used to develop the GCI method, as described in NUREG-2152 and ASME V&V 20. These are summarized as follows:

- Grid refinement or coarsening is performed systematically in all directions; that is, the refinement or coarsening should be structured even if the grid is unstructured.
- The observed order of accuracy should not vary greatly from the theoretical order of accuracy (i.e., the order of accuracy of the numerical method used in the analysis).
- A minimum of four grids is required to demonstrate that the observed order of accuracy is constant for a simulation series.
- A three-grid solution for the observed order of accuracy may be adequate if the values of the target variable (for example, peak cladding temperature, total heat transfer rate, or mass flow rate) predicted on the three grids are in the asymptotic region for the simulation series.
- Methods to test for asymptotic behavior of the target variable predicted values are provided in ASME V&V 20.
- The factor of safety value is 1.25 if the target values on the three grids are in the asymptotic region and the observed order of accuracy does not vary greatly from the theoretical order of accuracy. Otherwise a factor of safety of 3.0 is used.

The GCI is calculated using the observed order of accuracy if it is smaller than the theoretical value. Otherwise the theoretical order of accuracy is used.

Spent Nuclear Fuel

Under the conditions where any of the cask component temperatures are close (within 5 percent) to their limiting values during an accident, or the MNOP is within 10 percent of its design basis pressure, or any other special conditions, verify that the applicant considered, by analysis, the potential impact of the fission gas in the canister to the cask component temperature limits and the cask internal pressurization.

3.4.3.2 Evaluation by Tests

Radioactive Materials

Temperature-sensing devices should be placed in critical package locations. For example, for MOX-fresh-fuel rods and assemblies, temperature-sensing devices should be placed on the test package's simulated fuel basket and fuel rods.

Verify that the application describes the test package, test facility, and test procedures in adequate detail. Confirm that the applicant used proper quality assurance programs to fabricate the test package, operate the test facility, and evaluate the test results. Verify that the test package has been adequately designed, as specified below:

- The thermal performance of the test package, including simulated package contents and any attached test instrumentation and mounting hardware, should be representative or prototypical of the actual package design.

- The temperature-sensing instrumentation should be located to measure the appropriate maximum package component temperatures and characterize the significant heat transfer pathways.

- Test package instrumentation (such as temperature- or pressure-sensing devices) should be mounted at locations that minimize their effects on local test package temperatures.

Review the ability of both the test facility (pool-fire or furnace facility) and the test procedures to meet the range of thermal conditions (e.g., insolation and fire heat fluxes or temperatures). Additional guidance for review of thermal testing is presented in Section 3.4.6 of this SRP chapter.

- Verify that the appropriate results from normal conditions of transport and hypothetical accident condition thermal tests, as specified below, are adequately presented:

- initial conditions (e.g., temperatures, pressures) and changes in the package resulting from structural tests

- maximum steady-state temperatures or pressures (e.g., hot normal conditions of transport, pre-fire conditions)

- maximum temperatures and pressures during the fire and post-fire periods

- physical changes in the package condition resulting from the fire test, such as changes in package material properties caused by combustion or melting of not important to safety package components

Some conditions, such as ambient temperature, decay heat of the contents, or package emissivity or absorptivity, may not be exactly represented in a thermal test. Verify that the thermal evaluation includes appropriate corrections or evaluations to account for these differences. For example, the thermal evaluation should include a temperature correction if the ambient temperature at the onset of the fire test was lower than 38 °C [100 °F]. Additional insight about evaluation by test is also presented in the following paragraphs.

Spent Nuclear Fuel

For those results determined by tests, verify that the applicant reported a description of the test package, the test facility, and the test procedures used for simulating either the normal conditions of transport or hypothetical accident conditions in adequate detail. Confirm that the applicant used proper quality assurance programs to fabricate the test package, operate the test facility, and evaluate the test results.

Review the ability of both the test facilities and test procedures to meet the range of specified temperatures: from -29 °C [-20 °F] to 38 °C [100 °F] for normal conditions of transport and both 38 °C [100 °F] and 800 °C [1,475 °F] for hypothetical accident conditions. Note that an evaluation by test will also have to consider the -40 °C [-40 °F] cold test [10 CFR 71.71(c)(2)]. Confirm that the facilities can simulate the specified heat-transfer boundary conditions, as follows:

- incident heat fluxes equivalent to or exceeding the specified insolation requirements during the normal conditions of transport or the post-fire environment for hypothetical accident conditions

- incident heat fluxes equivalent to or exceeding the specified convective and radiative heat transfer environment, including specified emissivities, for a minimum 30-minute period representing the hypothetical accident condition fire (e.g., fully engulfing)

- an environment that assures an adequate supply and circulation of oxygen for initiating and naturally terminating the combustion of any burnable package component.

Confirm that the test package, with a simulated package contents and any attached test instrumentation or hardware, adequately simulates the thermal behavior of the actual package design.

Verify that figures in the SAR show the locations of the temperature and heat flux sensing devices. Verify that the temperature sensing devices are placed on the test package in the following manner:

- on applicable components

- they do not unduly affect local temperatures

- in locations where maximum temperatures are expected and where other temperatures need to be determined

- in locations that permit reasonable interpolation or extrapolation of measured temperatures for estimating temperatures in unmonitored regions of the package

The applicable components include, but are not limited to, the containment vessel, fuel basket, seals, radiation shielding, criticality controls, and impact limiters. Confirm that the temperature-sensing devices are measuring the temperature of the component, not that of the component environment.

Verify that the test time is sufficient for temperatures to reach steady-state conditions under normal conditions of transport or their peak following cessation of the hypothetical accident condition fire. To the extent that specified boundary conditions, the decay heat of the contents, or specified temperatures are not achieved during a test, verify that the evaluations include appropriate corrections to the temperature data.

Additional guidelines on reviewing thermal tests under hypothetical accident conditions are available for further reading (see NUREG/CR-5636, "Fire and Furnace Testing of Transportation Packages for Radioactive Materials," issued January 1999; Gregory et al. 1987; Hovingh and Carlson 1994; VanSant et al. 1993, ASTM E2230).

3.4.3.3 Confirmatory analyses

The rigor required of the confirmatory analysis will depend on the size of the margin between the maximum package component temperatures determined by the applicant and the maximum temperature limit specified for a material or component or the regulatory limit determined by the type of shipment. A conservative method of analysis of the fire portion of the hypothetical accident is to mathematically apply an 800°C [1,475°F] surface temperature for 30 minutes to the package with the appropriate initial temperature distribution and content decay heat. This will eliminate the questions about the flame velocity and its effect on the convection heat input into the package. The analysis will still require the appropriate boundary conditions during cooldown to calculate the maximum component temperatures, recognizing that peak temperatures often occur hours after the 30-minute test because of a package's thermal mass and the content's decay heat.

3.4.3.4 Effects of uncertainties

Verify that the thermal evaluations appropriately address the effects of uncertainties in thermal and structural properties of materials, test conditions and diagnostics, and analytical methods, as applicable.

3.4.3.5 Conservatisms

Verify that the applicant discussed, quantified, and reported in the SAR any conservatisms associated with the thermal models. For cases with small margin, ensure that the SAR includes a table of results showing how the associated conservatisms affect the safety parameters (e.g., calculated peak cladding temperature, confinement seal temperatures, operating pressure). The table of results should be supported with fully documented analytical models and calculations. In order to justify a small thermal margin, the identified model conservatisms should demonstrate a positive increase in the predicted margin. Verify that these discussions include the effects of uncertainties and analytical error in thermal properties, test conditions and diagnostics, and analytical methods. If the evaluations are performed by test, verify that the test

results are reliable and repeatable. For additional guidance, see NUREG-2152, ASME V&V 20, and ASME Performance Test Code 19.1-2005, "Test Uncertainty."

3.4.4 Evaluation of Accessible Surface Temperatures

Verify that the SAR presents the thermal model used for the calculation of the accessible surface temperature. This model should consist of a heat balance at the surface of the package in which the decay heat from the contents at the surface of the package is equal to the convective and radiative heat loses to the environment at an ambient temperature of 38 °C [100 °F].

If the maximum surface temperature of a package exceeds the regulatory limit, a personnel barrier can be placed around the package. This personnel barrier becomes the accessible package surface. Verify that the applicant considered the thermal impedance of the barrier when determining the package temperatures for normal conditions of transport.

Confirm that the maximum accessible surface temperature the applicant determined is consistent with the General Information chapter of the SAR.

When appropriate, perform an independent analysis as described in Section 3.4.3.3 of this SRP chapter to confirm the maximum accessible surface temperature the applicant determined.

Ensure that the maximum temperature of the accessible package surface does not exceed 85 °C [185 °F] for exclusive-use shipment and 50 °C [122 °F] for nonexclusive-use shipment when the package is subjected to the heat conditions of 10 CFR 71.43(g). SNF packages generally are shipped as an exclusive-use shipment.

3.4.5 Thermal Evaluation Under Normal Conditions of Transport

3.4.5.1 Heat and cold

Confirm that the thermal evaluation demonstrates that the tests for normal conditions of transport do not result in significant reduction in packaging effectiveness, including the following:

- degradation of the heat-transfer capability of the packaging (such as creation of new gaps between components)
- changes in material conditions or properties (e.g., expansion, contraction, gas generation, and thermal stresses) that affect the structural performance
- changes in the packaging or contents that affect containment, shielding, or criticality, such as thermal decomposition or melting of materials
- ability of the package to withstand the tests under hypothetical accident conditions

Verify that the component temperatures and pressures do not exceed their allowable values.

Ensure that the maximum temperature of the accessible package surface is less than 50 °C [122 °F] for nonexclusive-use shipment or 85 °C [185 °F] for exclusive-use shipment when the package is subjected to the heat conditions of 10 CFR 71.43(g).

Verify that the SAR properly determines the maximum temperatures of the package components during normal conditions of transport when the package is in 38 °C [100 °F] still air with insolation, according to the table in 10 CFR 71.71(c)(1), and the content heat load is the maximum allowable. Temperatures of special interest include, but are not limited to, those of the radioactive contents/fuel/cladding, containment vessel, seals, shielding, criticality controls, and impact limiters. Confirm that applicant has determined the volume-averaged temperature of gases. Verify that the results are consistent with the General Information and Structural Evaluation chapters of the SAR.

Ensure that the SAR determines the minimum temperatures of the package components during normal conditions of transport when the package is in -40 °C [-40 °F] still air without insolation and the content heat load is the minimum allowable. If the SAR does not restrict the minimum heat load, the package should be considered at a uniform temperature of -40 °C [-40 °F]. Verify that these temperatures are consistent with the Structural Evaluation chapter of the SAR.

Confirm that the maximum temperatures do not exceed their allowable limits and minimum temperatures do not extend below their allowable limits, as specified in Section 3.4.2.3 of this SRP chapter.

3.4.5.2 Maximum normal operating pressure

For all packages, including MOX-fresh-fuel rods and assemblies, the thermal evaluation shall determine the MNOP when the package has been subjected to the heat condition specified in 10 CFR 71.71(c)(1) (which includes insolation) for 1 year. Ensure that the evaluation has considered all possible sources of gases, such as those present in the package at closure, water vapor, radiolysis, dehydration, outgassing, or fill gas released from the MOX-fresh-fuel rods.

The evaluation of MOX powder and pellets on the MNOP should be similar to that of plutonium oxide powder and pellets.

For powders, however, it should be noted that there is the possibility that hydrogen and other gases may be produced from the thermal- or radiation-induced decomposition of the moisture associated with impure plutonium-containing oxide powders. Given that the ratio of plutonium oxide powder to uranium oxide powder with respect to the total amount of MOX powder is expected to be small, any additional contributions from such gases should also be expected to be small.

By the time the MOX powders are converted to fuel pellets, the processing temperatures should have removed all of the impurities from the plutonium oxide. From this point on (i.e., from MOX pellets, to MOX fuel rods, to full fuel assemblies), the evaluations of MOX pellets and LEU pellets should be virtually identical.

To summarize, ensure that the maximum normal operating pressure calculation has considered all possible sources of gases, such as the following:

- gases initially present in package
- saturated vapor, including water vapor from the contents or packaging
- helium from the radioactive decay of the contents

- hydrogen or other gases resulting from thermal- or radiation-induced decomposition of materials such as water or plastics

Ensure that the application demonstrates that hydrogen and other flammable gases make up less than 5 percent by volume of the total gas inventory, or lower if warranted by the flammable gas, within any confined volume. Confirm that the maximum normal operating pressure is consistent with that in the General Information, Structural Evaluation, and Acceptance Tests and Maintenance Program chapters of the SAR.

Verify that packages that have confined liquids, whether as content or as part of the design (e.g., liquid neutron absorber), are designed such that there is sufficient ullage, or other specified provision, for expansion of the liquid.

Spent Nuclear Fuel

Confirm that the SAR determines the maximum normal operating pressure when the package has been subjected to the heat condition for 1 year, as specified in 10 CFR 71.71(c)(1). Ensure that the evaluation has considered all possible sources of gases, such as the following:

- gases present in the package at closure
- fill gas released from the SNF rods
- backfilled helium and generated helium from a failed burnable poison rod assembly (BPRA)
- fission product gases released from the SNF
- saturated vapor from material in the containment vessel, including water vapor desorbed from the containment system components or the package contents
- helium from the α-decay of the SNF contents
- hydrogen and other gases from radiolysis or chemical reactions (e.g., sodium-water)
- hydrogen and other gases from the dehydration, combustion, or decomposition of package components

Guidance on release of fill gas and fission product gas for pressurized-water reactor (PWR) and boiling-water reactor (BWR) fuel is provided in Table 4-2, “Release Fractions and Specific Activities for the Contributors to the Releasable Source Term for Packages Designed to Transport Irradiated Fuel Rods,” of this SRP.

Verify that the MNOP in the application is consistent with the Structural Evaluation chapter of the SAR.

If the package has any confined volumes other than the containment vessel (e.g., coolant tanks), confirm that their pressures are properly determined (including consideration of ullage for liquids) and consistent with the Structural Evaluation chapter of the SAR.

3.4.6 Thermal Evaluation Under Hypothetical Accident Conditions

Verify that the package has been evaluated to demonstrate the effects of the tests for hypothetical accident conditions.

3.4.6.1 Initial conditions

For all packages, including MOX-fresh-fuel rods and assemblies, the internal heat load of the contents are to be at its maximum allowable power, unless a lower power, consistent with the temperature and pressure, is more unfavorable.

Before the fire test, the package is to be evaluated for the effects of the crush (if applicable), drop, and puncture tests. Ensure that the physical condition of the package represented in the thermal evaluations under hypothetical accident conditions is consistent with the post-structural hypothetical accident conditions test results from the Structural Evaluation chapter of the SAR.

Verify that the application justifies the most unfavorable initial conditions of the following:

- an ambient temperature between -29 °C [-20 °F] with no insolation and 38 °C [100 °F)] with insolation (typically, the temperature will be the latter)

- an internal pressure of the package equal to the maximum normal operating pressure unless a lower internal pressure, consistent with the ambient temperature, is less favorable

- contents at maximum decay heat unless a lower heat, consistent with the temperature and pressure, is less favorable

Confirm that the initial steady-state temperature distribution is consistent with the thermal evaluation under normal conditions of transport.

3.4.6.2 Fire test

For all packages, including MOX-fresh-fuel rods and assemblies, the internal heat load of the contents is to be at its maximum allowable power, unless a lower power, consistent with the temperature and pressure, is more unfavorable.

Confirm that the package design is evaluated for the effects of the fire test. Ensure that the evaluation (likely done by computer analysis) appropriately addresses the fire test conditions, including the following:

- dimensions of the pool fire (i.e., package should be fully engulfed)
- fire temperature and duration (see below)

Ensure that the evaluation accounts for the following characteristics of the package:

- orientation and placement in the fire
- internal heat load (i.e., maximum possible heat loading)

For the after-fire verification, see the last paragraph of this section, as the listed four conditions (bullets) are applicable to both categories of transportation packages (i.e., RAM and SNF).

Verify that the package is exposed to the 800°C [1,475°F] fire environment for a minimum of 30 minutes and that surface and fire emissivity are greater than or equal to 0.8 and 0.9, respectively. Confirm that the application specifies flame velocities that are appropriate for the hydrocarbon fire and uses the appropriate correlation for convection in the fire as a boundary condition (see Gregory et al. 1987).

Note that after the fire, emissivity and absorptivity values for the package surfaces would tend to be higher because of the layer of soot deposited on the package surfaces from the fire.

Verify that the evaluation accounts for the following conditions after the fire exposure:

- no artificial cooling of the package surface (i.e., no water stream)
- the package is subjected to full solar insolation
- the evaluation continues until the post-fire, steady-state condition is achieved
- all combustion is allowed to proceed until it terminates naturally

See Section 3.4.7.2 of this SRP chapter for additional insight on the description of the fire test.

3.4.6.3 Maximum temperatures and pressures

Verify that the SAR appropriately evaluates the transient peak temperatures of the package components as a function of time after the fire. The maximum temperatures in the components will occur following cessation of the fire, with the delay time increasing with the distance inward from the package surface. Verify also that the SAR determines the maximum temperatures of the post-fire, steady-state condition.

Confirm that the maximum temperatures do not exceed the maximum allowable temperature limits. If lead is utilized for shielding, confirm that the lead does not reach melting temperature as a result of the hypothetical accident conditions thermal test.

Verify that the evaluation of the maximum pressure in the package design is based on MNOP (see Section 3.4.5.2 of this SRP chapter) as it is affected by the fire-induced increases in package component temperatures.

Verify that maximum temperatures and pressures are consistent with those in the Structural and Containment Evaluation chapters of the SAR.

Ensure that the application demonstrates that hydrogen and other flammable gases make up less than 5 percent by volume of the total gas inventory, or lower if warranted by the flammable gas, within any confined volume.

<u>Radioactive Materials</u>

Confirm that the applicant considered possible increases in gas inventory, caused by fire-induced thermal combustion or decomposition processes, in the pressure determination.

For MOX-fresh-fuel rods and assemblies, the applicant shall consider the possible increases in gas inventory (e.g., from an unlikely failure of a fuel rod) in the pressure determination.

For MOX powders and fuel pellets, the processing temperatures should have removed all of the impurities from the plutonium oxide. The only additional increase in pressure should be the

result of any helium released from the contents as a result of the increased temperature. However, because any increase in temperature as a result of the thermal testing should be small when compared to the processing temperatures, any increase in pressure should likewise be small.

Verify that maximum temperatures and pressures are consistent with the Structural and Containment Evaluations of the SAR.

Spent Nuclear Fuel

Confirm that the applicant considered possible increases in gas inventory (e.g., from fuel rod failure, BPRA failure) in the pressure determination.

If the package has any confined volumes other than the containment vessel (e.g., coolant tanks), confirm that their pressures are properly determined.

For high-burnup fuel (burnup exceeding 45,000 megawatt days per metric ton of uranium), verify that the thermal evaluation considers credible or bounding fuel reconfigurations, for example, possible accumulation and relocation of damaged fuel near temperature-sensitive components such as seals.

Verify that maximum temperatures and pressures are consistent with the Structural and Containment Evaluations of the SAR.

3.4.7 Appendix

An appendix may include a list of references, copies of any applicable references not generally available to the reviewer, computer code descriptions, input and output files, test facility and instrumentation descriptions, test results, supplemental analyses, and other appropriate supplemental information.

3.4.7.1 Radioactive materials

Description of Test Facilities

For cases where the package is evaluated by a fire test, confirm that the descriptions of the test facility include the following:

- type of facility (furnace, pool-fire)
- method of heating the package (gas burners, electrical heaters)
- volume and emissivity of the furnace interior
- method of simulating decay heat, if applicable
- types, locations, and measurement uncertainties of all sensors used to measure the fire heat fluxes, fire temperatures, and test package component temperatures and pressures
- how the post-fire environment is maintained to adequately attain the post-fire steady-state condition

- methods for maintaining and measuring an adequate supply and circulation of oxygen for initiating and naturally terminating the combustion of any burnable package component throughout both the fire and post-fire periods

Test Descriptions

This description should include the following:

- test procedures
- test package description
- test initial and boundary conditions
- test chronologies (planned and actual)
- photographs of the package components, including any structural or thermal damage, before and after the tests
- test measurements, including, at a minimum, documentation of test package physical changes and temperature and heat flux histories
- corrected test results (if applicable)
- methods used to obtain these corrected results.

Confirm that all sensors that measure heat fluxes and temperatures are positioned to measure values affecting critical components such as seals, valves, pressure, and structural components. The sensors should have proper operating ranges for the test conditions. Verify that the applicant appropriately considered possible perturbations caused by the presence of these sensors (e.g., by disturbing local convective heat transfer conditions).

For a pool-fire facility, verify that the fire dimensions and test package relative location conform to the following specifications in 10 CFR 71.73(c)(4):

- The fire width should extend horizontally between 1 and 4 meters [40 inches and 13 feet] beyond any external surface of the package.
- The package should be positioned 1 meter [40 inches] above the surface of the fuel source.

Because it is probable that the method of supporting the package in the test facility will locally perturb fire conditions adjoining the test package, verify that the applicant has appropriately incorporated such an effect into the thermal evaluation.

Applicable Supporting Documents or Specifications

Review any reference documents included in the SAR appendix. In addition to the documents noted in Sections 3.4.7.1 and 3.4.7.2 of this SRP chapter, these documents may include a variety of items such as thermal specifications of O-rings and other components and documentation of the thermal properties.

For MOX-fresh-fuel rods and assemblies, the application should include the applicable sections from reference documents. These documents may include the test plans used for the thermal tests, the thermal specifications of O-rings, fuel clad, and other components, and the documentation of the thermal properties of non-ASME-approved materials used in the package.

Verify that similar documentation is also included for MOX powders and pellets.

Analyses Details

Supplemental calculations may be required to support evaluations presented in the Thermal Evaluation chapter of the SAR. Verify that all such analyses are prepared in a manner consistent with Section 3.4.3.1 of this SRP chapter.

3.4.7.2 Spent nuclear fuel

Justification for Assumptions or Analytical Procedures

Confirm that the applicant has stated and justified all assumptions used in the evaluation of the package.

Review the appropriateness of and justification for the applicant's assumptions and analytical procedures.

Computer Program Description

Confirm that the applicant described all the computer programs used in the thermal evaluation of the package. Verify that the applicant identified space dimensionality and method of analysis (i.e., finite difference, finite element). Verify that the application describes the range of applications and phenomena (linear, nonlinear; steady state, transient) as well as the material properties and material models (isotropic, anisotropic). Verify that the application describes the various types of initial boundary conditions and thermal loads. Verify that the application identifies solution techniques (direct or iterative for steady state; explicit and implicit for transient). Also, verify that the application identifies and describes any other capabilities (enclosure radiation with view factor calculation, thermal stress analysis) that are applicable to the applicant's thermal evaluation. Verify that the computer programs are appropriate for the problem to which they are applied.

Computer Input and Output Files

Confirm that the applicant has submitted annotated input files, as applicable, for each problem (maximum accessible surface temperature, normal conditions of transport, calculation of initial temperature distribution for hypothetical accident, initial temperature distribution for analysis of thermal hypothetical accident) analyzed using a computer code. Confirm that the applicant has submitted annotated output files, as applicable, for each problem (maximum accessible surface temperature, normal conditions of transport, calculation of initial temperature distribution for hypothetical accident conditions, and temperature distribution histories for the thermal hypothetical accident condition during and following the 30-minute fire, until all the package component temperatures have reached their maxima).

Description of Test Facilities

Verify that the application describes the facilities used for performing thermal tests. The description should include, but is not limited to, the following:

- the type of facility (furnace, pool fire)
- the method of heating the package (gas burners, electrical heaters)

Verify that the description of a furnace facility includes the volume and emissivity of the furnace interior as well as the method of measuring the interior temperature. The oxygen concentration in a furnace test should be consistent with that of a hydrocarbon-fuel fire.

For a pool-fire facility, verify that the application specifies the size of the fire relative to the size of the package. Verify that the fire dimension conforms to 10 CFR 71.73(c)(4), which requires the fire thickness to extend horizontally at least 1 meter {[40 inches (but not more than 3 meters [10 feet]} beyond any external surface of the package. The package will be positioned 1 meter [40 inches] above the surface of the fuel source. Verify that the application describes the method of support of the package in a test facility and presents an analysis of the heat loss from the package through the support to "ground." Review to ensure that the analysis of the heat loss from the package through the support is appropriate.

Confirm that the application identifies and describes the sensors used to measure heat flux and temperature. Verify that the application presents the applicable operating ranges of the sensors. Verify that the application presents and quantifies the perturbation by the sensor (e.g., from heat losses along thermocouple leads, shadowing by heat flux measuring devices) on the quantity to be measured (temperature, heat flux). Review to ensure that the heat flux and temperature sensors are appropriate and that the measurements are corrected for the perturbations by the sensors on the quantity to be measured. Verify that if calorimeters are used to measure heat flux, the applicant corrected the calorimeter readings to account for the difference in thermal inertia between the calorimeter and the package (unless the measured data have reached steady state). Verify that the application presents the method of correction of the calorimeter reading; review the method for appropriateness. For additional information, see ASME PCT 19.5.

Test Results

Verify that the application presents test measurements, including temperatures (or temperature histories) and flux (or flux histories). Verify that the corrected test results are presented and that appropriate methods are used to obtain these corrections. Verify that, for the thermal portion of the hypothetical accident, the application clearly notes the time at which the 30-minute test starts and ends. Verify that the measurements (and corrected results) are continued until steady state occurs (for tests for normal conditions of transport) or until the maximum temperature occurs in all the package components (for tests of the thermal portion of the regulatory hypothetical accident).

Verify that the application presents photographs of the package components before and following the tests. Verify that the application presents photographs of regions of components with thermal damage (such as charring of the insulation, damage to O-rings).

Applicable Supporting Documents or Specifications

Verify that the application includes the applicable sections from reference documents. These documents may include the test plans used for the thermal tests, the thermal specifications of O-rings and other components, and the documentation of the thermal properties of non-ASME-approved materials used in the package.

Additional Analyses

Frequently, thermally driven processes will occur in a package. These processes may include, but are not limited to, the following:

- generation of gases within the containment system
- effects of phase changes on package materials
- combustion, decomposition, or dehydration of package materials

The production of gases (e.g., hydrogen by radiolysis) or thermal decomposition of materials (e.g., a neutron shield) may occur in the package. Phase changes of material resulting in a decrease of the material density occurring in the containment system or in a lead shield can result in a pressure increase in the system. The tests under hypothetical accident conditions may cause combustion, decomposition, or dehydration of components such as an impact limiter or the neutron shield material.

Confirm that the applicant has identified all thermally driven special processes that will occur in the package. Verify that the applicant has stated and justified all assumptions used in the quantification and evaluation of these additional processes. Review the appropriateness of and justification for the applicant's assumptions and analytical procedures. Verify that the results are incorporated in the appropriate subsections of the Thermal Evaluation chapter of the SAR.

Other supplemental calculations may be required to support evaluations presented in the Thermal Evaluation chapter. Verify that all such analyses meet the goals discussed in Section 3.4.3.1 of this SRP chapter.

3.5 Evaluation Findings

Prepare evaluation findings upon satisfaction of the regulatory requirements in Section 3.3 of this SRP chapter. If the documentation submitted with the application fully supports positive findings for each of the regulatory requirements, the statements of findings should be similar to the following:

F3-1 The staff has reviewed the package description and evaluation and concludes that they satisfy the thermal requirements of 10 CFR Part 71.

F3-2 The staff has reviewed the material properties and component specifications used in the thermal evaluation and concludes that they are sufficient to provide a basis for evaluation of the package against the thermal requirements of 10 CFR Part 71.

F3-3 The staff has reviewed the methods used in the thermal evaluation and concludes that they are described in sufficient detail to permit an independent review, with confirmatory calculations, of the package thermal design.

F3-4 The staff has reviewed the accessible surface temperatures of the package as it will be prepared for shipment and concludes that they satisfy 10 CFR 71.43(g) for packages transported by exclusive-use vehicle.

F3-5 The staff has reviewed the package design, construction, and preparations for shipment and concludes that the package material and component temperatures will not extend beyond the specified allowable limits during normal conditions of transport consistent with the tests specified in 10 CFR 71.71.

F3-6 The staff has reviewed the package design, construction, and preparations for shipment and concludes that the package material and component temperatures will not exceed the specified allowable short-term limits during hypothetical accident conditions consistent with the tests specified in 10 CFR 71.73.

The reviewer should provide a summary statement similar to the following:

> Based on review of the statements and representations in the application, the NRC staff concludes that the thermal design has been adequately described and evaluated, and that the thermal performance of the package meets the thermal requirements of 10 CFR Part 71.

3.6 References

10 CFR Part 71, “Packaging and Transportation of Radioactive Material.”

American Society of Mechanical Engineers (ASME) V&V 20, “Standard for Verification and Validation in Computational Fluid Dynamics and Heat Transfer,” New York, NY.

ASME PTC 19.1-2005, “Test Uncertainty,” New York, NY.

ASTM E2230, “Standard Practice for Thermal Qualification of Type B Packages for Radioactive Material”.

NUREG-2152, U.S. Nuclear Regulatory Commission, “Computational Fluid Dynamics Best Practice Guidelines for Dry Cask Applications,” March 2013, Agencywide Documents Access and Management System Accession No. ML13086A202.

NUREG/CR-5636, U.S. Nuclear Regulatory Commission, “Fire and Furnace Testing of Transportation Packages for Radioactive Materials,” January 1999.

Gregory, J.J., R. Mata, and N.R. Keltner, “Thermal Measurements in a Series of Large Pool Fires,” SAND85-0196, TTC-0659, UC-71, Sandia National Laboratories, Albuquerque, NM, August 1987.

Hovingh, J. and R.W. Carlson, “Thermal Testing Transport Packages 1994 for Radioactive Materials - Reality vs. Regulation,” ASME 1994 Pressure Vessel & Piping Conference, Minneapolis, MN, June 1994.

Levy, I.S. et al., “Recommended Temperature Limits for Dry Storage of Spent Light Water Reactor Zircaloy-Clad Fuel Rods in Inert Gas,” PNL-6189, Pacific Northwest Laboratory, Richland, WA, May 1987.

Schwartz, M.W. and M.C. Witte, “Spent Fuel Cladding Integrity During Dry Storage,” UCID-21181, Lawrence Livermore National Laboratory, Livermore, CA, September 1987.

VanSant, J.H., R.W. Carlson, L.E. Fischer, and J. Hovingh, “A Guide for Thermal Testing Transport Packages for Radioactive Material - Hypothetical Accident Conditions,” UCRL-ID-110445, Lawrence Livermore National Laboratory, Livermore, CA, February 9, 1993.

4 CONTAINMENT EVALUATION

4.1 Review Objective

The objective of the U.S. Nuclear Regulatory Commission's (NRC's) containment evaluation is to verify that the applicant has adequately evaluated the performance of transportation packages for radioactive material so that the packages (packaging together with contents) meet the regulations in Title 10 of the *Code of Federal Regulations* (10 CFR) Part 71, "Packaging and Transportation of Radioactive Material."

4.2 Areas of Review

The NRC staff should review the application to verify that it adequately describes the package and includes adequately detailed drawings. In general, the staff should review the following information to determine the adequacy of the package description:

- description of containment system
  - containment boundary
  - codes and standards
  - special requirements for damaged spent nuclear fuel (SNF)
- general considerations
  - Type AF fissile packages
  - Type B packages
  - combustible-gas generation
- containment under normal conditions of transport
  - Type B transportation packages
  - SNF transportation packages
  - compliance with containment criteria
- containment under hypothetical accident conditions (Type B packages)
  - Type B transportation packages
  - SNF transportation packages
  - compliance with containment criteria
- leakage rate tests for Type B packages
- appendix

4.3 Regulatory Requirements and Acceptance Criteria

Table 4-1 identifies some regulatory requirements associated with the areas of review covered in this SRP chapter. These are not necessarily the only regulations that may apply but are meant to guide the reviewer's initial assessment of whether the applicant provided sufficient information to conduct the safety evaluation.

Table 4-1 Relationship of Regulations and Areas of Review for Transportation Packages								
Areas of Review	**10 CFR Part 71 Regulations**							
	71.31 (a)(1) (a)(2)	**71.31(c)**	**71.33**	**71.35 (a)**	**71.41 (a)**	**71.43 (c)**	**71.43 (d)**	**71.43 (e)**
Description of containment system	●		●	●	●			
Codes and standards		●						
General considerations			●			●	●	●
Containment under normal conditions of transport				●	●			
Containment under hypothetical accident conditions				●	●			
Areas of Review	**10 CFR Part 71 Regulations**							
	71.43 (f)	**71.43 (h)**	**71.51 (a) (1)**	**71.51 (a) (2)**	**71.51 (c)**	**71.63**	**71.71**	**71.73**
Description of containment system					●			
General considerations	●	●			●	●	●	●
Containment under normal conditions of transport			●		●		●	
Containment under hypothetical accident conditions				●	●			●
Note: The bullet (●) indicates the entire regulation as listed in the column heading applies.								

4.3.1 General Requirements

The applicant must describe and evaluate the transportation package in sufficient detail to demonstrate that it meets the relevant containment requirements of 10 CFR 71.31(a)(1), 71.31(a)(2), 71.31(c), 71.33(a)(4), 71.33(a)(5), 71.33(b)(1), 71.33(b)(3), 71.33(b)(5), 71.33(b)(7), and 71.35(a).

The transportation package must include a containment system securely closed by a positive fastening device that cannot be opened unintentionally or by a pressure that may arise within the transportation package, in accordance with 10 CFR 71.43(c). If necessary, coordinate with the structural reviewer when reviewing the closing device.

The transportation package must be made of materials and construction that assure that there will be no significant chemical, galvanic, or other reaction, in accordance with 10 CFR 71.43(d). If necessary, coordinate with the materials reviewer when reviewing material compatibility.

Any valve or similar device on the transportation package must be protected against unauthorized operation and, except for a pressure-relief valve, must be provided with an enclosure to retain any leakage, as required by 10 CFR 71.43(e).

Shipments containing plutonium must be made with the contents in solid form if the contents contain greater than 0.74 terabecquerel [20 curies] of plutonium, in accordance with 10 CFR 71.63, "Special Requirement for Plutonium Shipments."

The transportation package shall not have cracks, pinholes, uncontrolled voids, or other defects that could significantly reduce the effectiveness of the packaging, as required by 10 CFR 71.85(a). Details on acceptance tests for first use of a package are found in the Acceptance Tests and Maintenance section of the application. Discussion on acceptance tests, and any test the NRC deems appropriate [10 CFR 71.93(b)], is found in the corresponding chapter of this SRP.

Each closure device of the transportation package, including any required seals and gaskets, must be properly installed, secure, and free of defects; the package must be in an unimpaired condition and be loaded and closed in accordance with written procedures, as required by 10 CFR 71.87(b), 10 CFR 71.87(c), and 10 CFR 71.87(f). Note that details of procedures are found in the Operating Procedures section of the application, and details on acceptance tests and maintenance procedures are found in the Acceptance Tests and Maintenance section of the application. Discussions on evaluating operating procedures, acceptance tests, and maintenance are found in the corresponding chapters of this SRP.

SNF that has been classified as damaged for storage must be placed in a can designed for damaged fuel or in an acceptable alternative. A can designed for damaged fuel confines gross fuel particles, debris, or damaged assemblies to a known volume within the cask and permits normal handling. Generally, the use of a can would be a factor in the applicant's criticality, shielding, thermal, material, and structural analyses. For example, it would be a factor in the applicant's analyses that ensure the requirements of 10 CFR 71.55(e) are met.

The applicant must describe [10 CFR Part 71.31(a)(1)] and evaluate the transportation package to demonstrate that it satisfies the containment requirements of 10 CFR Part 71, Subpart E, "Package Approval Standards," under the tests and conditions in Subpart F, "Package, Special Form, and LSA-III Tests," as specified in 10 CFR 71.31(a)(2) and 10 CFR 71.3, "Package Evaluation."

As noted in 10 CFR 71.19(c), the applicant must ensure that any modifications to a previously approved package are not significant with respect to the safe performance of the containment system.

4.3.2 Containment Under Normal Conditions of Transport

The application must demonstrate that the transportation package satisfies the containment requirements of 10 CFR Part 71, Subpart E, under the conditions and tests of Subpart F, as specified in 10 CFR 71.35(a) and 10 CFR 71.41(a).

The transportation package may not incorporate a feature intended to allow continuous venting during transport, in accordance with 10 CFR 71.43(h).

The transportation package must be designed, constructed, and prepared for shipment so that under the tests specified in 10 CFR 71.71, "Normal Conditions of Transport," there would be no loss or dispersal of radioactive contents and no substantial reduction in the effectiveness of the package, as specified in 10 CFR 71.43(f). This regulation is applicable to Type AF and Type B packages. An additional requirement for Type B packages is specified in 10 CFR 71.51(a).

A Type B transportation package must meet both the containment requirements of 10 CFR 71.43(f) and 10 CFR 71.51(a)(1) under the tests specified in 10 CFR 71.71 and with no dependence on filters or a mechanical cooling system, as specified in 10 CFR 71.51(c).

4.3.3 Containment Under Hypothetical Accident Conditions

The application must demonstrate that the transportation package satisfies the containment requirements of 10 CFR Part 71, Subpart E, under the conditions and tests of Subpart F, as specified in 10 CFR 71.35(a) and 10 CFR 71.41(a).

A Type B transportation package must meet the containment requirements of 10 CFR 71.51(a)(2) for hypothetical accident conditions and with no dependence on filters or a mechanical cooling system, as required by 10 CFR 71.51(c).

4.4 Review Procedures

The containment review of transportation packages for radioactive material should ensure that the containment requirements of 10 CFR Part 71 are satisfied.

The containment review of transportation packages should be based, in part, on the descriptions and evaluations presented in the General Information, Material Evaluation, Structural Evaluation, and Thermal Evaluation sections of the application. Similarly, results of the containment review are considered in the review of Operating Procedures and Acceptance Tests and Maintenance Program. An example of the information flow for the containment review is shown in Figure 4-1. The containment evaluation results could indicate that special conditions in the certificate of compliance (CoC) (i.e., package leakage testing) are required. Verify that these conditions are consistent with the results from the thermal evaluation.

This chapter of the SRP provides review procedures for the containment review of transportation packages. Appendix A, “Description, Safety Features, and Areas of Review for Different Types of Radioactive Material Transportation Packages,” to this SRP describes different types of packaging for different types of contents and provides supplemental discussions and specific guidance related to containment for the particular package types (e.g., uranium hexafluoride (UF6) packages). Note that unirradiated low-enriched uranium (LEU) transportation packages have traditionally fallen under the heading of Type AF fissile transportation packages. However, reprocessed fresh fuel may have content activity that results in a Type B designation; the extent of the review will be dependent on whether the package is designated as Type AF fissile or Type B. Likewise, mixed oxide (MOX) transportation packages, because of the intentional incorporation of plutonium, can only be considered Type B transportation packages, as defined in 10 CFR Part 71.

4.4.1 Description of the Containment System

4.4.1.1 Containment boundary

Review the containment design features presented in the General Information and Containment sections of the application. All drawings, figures, and tables that describe containment features should be consistent with the evaluation.

Verify that the application provides a complete description of the containment boundary, including, as applicable, the containment vessel, welds, O-rings and seals, lids, cover plates,

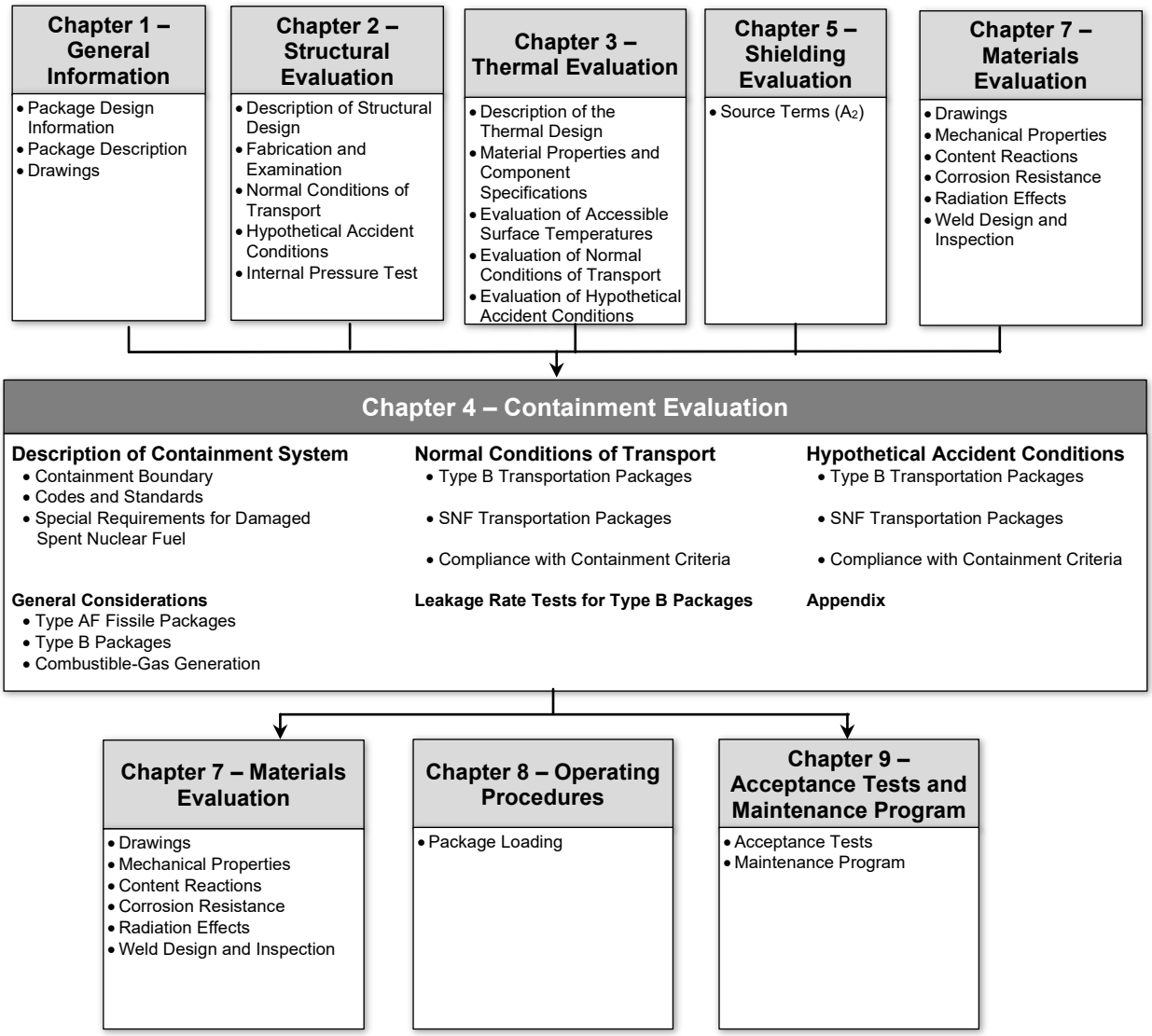

Figure 4-1 Information Flow for the Containment Evaluation

valves, and other closure devices. The application should also describe details associated with the containment boundary, such as codes, standards, and acceptance tests (materials, welds, seals); consult with structural and material disciplines during the review. Figures and sketches should clearly depict the containment boundary. Ensure that all components of the containment boundary are shown in the drawings. The application should provide the containment boundary's free volume, as this information is used in the release calculations discussed below.

Confirm that the following information regarding components of the containment boundary is consistent with that presented in the Structural Evaluation, Material Evaluation, and Thermal Evaluation sections of the application:

- materials of construction
- containment boundary welds

- applicable codes and standards (e.g., American Society of Mechanical Engineers Boiler and Pressure Vessel Code specifications for the vessel)
- bolt torque required to maintain positive closure
- maximum and minimum allowable temperatures of components, including seal material
- maximum and minimum temperatures of components under the tests for normal conditions of transport and hypothetical accident conditions.

Verify that the application describes in detail all containment boundary penetrations and their method of closure. Performance specifications for components such as valves, pressure-relief devices, and O-rings should be documented, and no device may allow continuous venting. Any valve or similar device (e.g., port plugs) on the package must be protected against unauthorized operation and, except for a pressure-relief valve, must be provided with an enclosure to retain any leakage. Cover plates and lids should be recessed or otherwise protected. Compliance with the containment requirements specified in 10 CFR Part 71, including permitted release limits, may not rely on any filter or mechanical cooling system.

Confirm that all containment seals, closure devices, and penetrations, including drain and vent ports, can be leak tested. If fill, drain, or test ports utilize quick-disconnect valves, ensure that such valves do not preclude leak testing of their seals (e.g., cover-plate seals), providing such seals form part of the containment boundary. Plugs can have sealing issues related to reliability from repeated opening and closing (e.g., sealant degradation, galling) such that leak testing should be performed after each installation to confirm there is a seal. Credit may not be taken for closure valves, quick-disconnects, or similar devices because it is assumed that mechanical closure devices (e.g., a valve or quick-disconnect) permit leaks of inert backfill gas (e.g., helium). Practical experience has shown such leaks occur and have been responsible for causing leak paths through the weld. Consequently, welds potentially subjected to helium pressure (by way of leakage through a mechanical closure device) during the welding process must be subsequently helium leak tested.

Verify that the seal material is appropriate for the transportation package. Ensure that no galvanic, chemical, or other reactions will occur between the seal and the packaging or its contents and that the seal will not degrade from irradiation. If penetrations are closed with two seals (e.g., to enable leak testing), verify which seal is defined as the containment boundary. Ensure that dimensions of the seal grooves are proper for the type and size of seals specified. Confirm that the temperature of containment boundary seals will remain within their specified allowable limits under both normal conditions of transport and hypothetical accident conditions. In addition, pursuant to NRC Bulletin 96-04, “Chemical, Galvanic, or Other Reactions in Spent Fuel Storage and Transportation Casks,” dated July 5, 1996, confirm that the transportation packages will perform adequately under the operating environments expected (e.g., short-term loading and unloading or long-term storage) during the license period such that no adverse chemical or galvanic reactions are produced.

Verify that the containment system is securely closed by a positive fastening device that cannot be opened unintentionally or by a pressure that may arise within the package.

4.4.1.2 Codes and standards

Verify that the application identifies established codes and standards applicable to the containment design as required by 10 CFR 71.31(c). Chapter 2, "Structural Evaluation," of this SRP discusses the codes and standards associated with the design, fabrication, testing, inspection, and certification of the containment system (e.g., ASME Boiler and Pressure Vessel Code).

4.4.1.3 Special requirements for damaged spent nuclear fuel

Review the condition and isotopic composition of the SNF or radioactive material proposed for the transportation package. If the contents include damaged fuel, coordinate with the criticality reviewer to verify that it is canned to facilitate handling and that the damaged fuel can confines gross fuel particles to a known subcritical volume under normal conditions of transport and hypothetical accident conditions. Coordinate with the structural and materials reviewers to ensure that the application includes justification for the appropriate material specifications and the design and fabrication criteria for the can. These specifications and criteria should generally be the same as those for containment or criticality support structures, as discussed in Chapter 2 of this SRP. If a screen-type container is used, ensure that the application includes justification for an appropriate mesh size (e.g., mesh size adequately less than fuel fragment size); an acceptance criterion for the mesh can be reviewed in consultation with a materials reviewer.

Note, the determination of the fuel condition should be based, as a minimum, on review of fuel records. Fuel that is known or suspected to be damaged should be visually inspected before loading. If the visual inspection indicates no damage greater that a hairline crack or a pinhole leak, the fuel may be considered undamaged. Additional discussion is provided in Section 7.4.14.1 of this SRP.

4.4.2 General Considerations for Containment Evaluations

4.4.2.1 Type AF fissile packages

Verify that the application specifies that the content under consideration is a Type AF quantity. For Type AF fissile packages, no loss or dispersal of radioactive material is permitted under normal conditions of transport, as specified in 10 CFR 71.43(f). Although 10 CFR Part 71 does not provide numerical release limits for Type AF packages, as it does for Type B packages, the package should confine the contents to a known geometry to ensure subcriticality under both normal conditions of transport and hypothetical accident conditions [per 10 CFR 71.55(e) and 10 CFR 71.59(a)(2)]. Because of the nature of the material, MOX radioactive material and MOX SNF transportation packages are Type B packages and cannot be considered Type AF fissile packages.

4.4.2.2 Type B packages

Type B packages must satisfy the quantified *release* rates of 10 CFR 71.51, "Additional Requirements for Type B Packages." For those packages not tested to a "leaktight" criterion, as defined in American National Standards Institute (ANSI), Institute for Nuclear Materials Management's "American National Standard for Radioactive Materials—Leakage Tests on Packages for Shipment" (ANSI N14.5), verify that the application includes release calculations and identifies the allowable normal conditions of transport and hypothetical accident condition volumetric leakage rates, in accordance with ANSI N14.5 (see NRC Regulatory Guide 7.4,

“Leakage Tests on Packages for Shipment of Radioactive Material.”). ANSI N14.5 provides an acceptable method to determine the maximum permissible volumetric *leakage* rates based on the allowed regulatory release rates under both normal conditions of transport and hypothetical accident conditions. Ensure that these two volumetric leakage rates are converted to standard air leakage rates, in accordance with ANSI N14.5. The smaller of these air leakage rates is defined as the reference air leakage rate. Typically, the normal conditions leakage rate is the most restrictive. Verify that the Containment section of the application specifies the contents of the package and how the source terms of the contents are used in the release calculations; note that the package content may change with each licensing action. Likewise, verify that the application describes the containment boundary’s fill gas (i.e., backfill gas), if used, as this information is used in the release calculations discussed above.

Discussion about release calculations and sample analyses for determining containment criteria for Type B packages are provided in NUREG/CR-6487 “Containment Analysis for Type B Packages Used to Transport Various Contents,” issued November 1996, and ANSI N14.5. If the application uses these sample analyses, ensure that the assumptions of that document are applicable to the package under consideration.

Note, the release calculations and analyses discussed above for maximum permissible volumetric leakage rates are unnecessary for transportation packages that are designed and tested to be “leaktight,” as defined in ANSI N14.5. This recognizes that the package’s containment boundary must remain “leaktight” under normal conditions of transport and hypothetical accident conditions.

Verify that the application describes and justifies the condition of the containment boundary and the contents, especially for content that has been in storage. For fuel content, it is noted that containment is performed by the packaging rather than the fuel cladding.

NRC Information Notice 2016-04, “ANSI N14.5-2014 Revision and Leakage Rate Testing Considerations,” dated March 28, 2016, contains information concerning issues that may arise when Type AF and Type B contents are shipped in a Type B package as part of different shipments.

Coordinate with the structural reviewer to ensure that the seal groove and gland design as well as the dimensions and tolerances as noted in engineering drawings are sized for the seal and that the seal and its groove are designed for internal and external (i.e., immersion) pressures. Coordinate with the materials reviewer to ensure that the properties of the seal, especially those that are elastomeric, appropriately consider normal condition and accident condition temperature ranges. In particular, the material for the seal that has high tracer gas permeation may result in difficulties in obtaining accurate leakage rate test results. Note that silicone has a relatively high helium permeation rate.

4.4.2.3 Combustible-gas generation

Confirm that the application demonstrates that any combustible gases generated in the package do not exceed 5 percent by volume, or lower if warranted by the flammable gas, of the free gas volume in any confined region of the package under normal conditions of transport and hypothetical accident conditions. For normal conditions of transport, the application should demonstrate that the 5 percent concentration value, or lower if warranted by the flammable gas, is not generated during a period of 1 year. A condition to the certificate of compliance should be added if a transport period less than 1 year is necessary to ensure that flammable conditions

are minimized. Verify that the application justifies the assumptions used in the combustible gas generation calculation, such as choice of "G" values. Information on "G" values and hydrogen generation (e.g., via radiolysis) can be found in NUREG/CR-6673 "Hydrogen Generation in TRU Waste Transportation Packages," issued May 2000. No credit should be taken for getters, catalysts, or other recombination devices.

4.4.3 Containment Evaluation under Normal Conditions of Transport

4.4.3.1 Type B transportation packages

Confirm that the radionuclides and physical form of the contents evaluated in the Containment section of the application are consistent with those presented in the General Information section of the application. Ensure that the radionuclides include any significant daughter products.

Verify that the application identifies the constituents that comprise the releasable source term, including radioactive gases, liquids, and powder aerosols. If less than 100 percent of the contents are considered releasable, evaluate the justification for the lower fraction.

Verify that the maximum temperature and maximum normal operating pressure are consistent with those determined in the Thermal Evaluation section of the application and with the pressure in the containment vessel based on the conditions of the package under normal transport conditions (e.g., temperature, pressure, release of gases through radiolysis, outgassing, water vapor).

Based on the releasable source term, ensure that the applicant calculated the maximum permissible release rate and the maximum permissible leakage rate in accordance with ANSI N14.5. Using the maximum normal conditions of transport temperature and maximum normal operating pressure, ensure that the maximum permissible leakage rate is converted to the reference air leakage rate in reference cubic centimeters per second, as defined in ANSI N14.5.

Note that for MOX SNF, consider the possibility of increased plutonium isotope levels inherent in MOX. This will influence the mass fraction of fuel that could be released as fines during cladding breach, with a relatively small increase in plutonium-bearing fines resulting in a significantly lower leakage rate acceptance criterion versus LEU SNF (given the A_2 values of the plutonium isotopes). Consideration should be given to defaulting to the ANSI N14.5 "leaktight" criterion.

4.4.3.2 Spent nuclear fuel transportation packages

Verify that the maximum normal operating pressure is consistent with that determined in the Thermal Evaluation section of the application. The pressure in the containment vessel should be based on the conditions of the package under normal transport conditions, including temperature, release of gases and volatiles from fuel rod cladding breaches, and vaporization of contents.

Detailed guidance on procedures for determining the containment criteria is provided in ANSI N14.5 and NUREG/CR-6487.

Confirm that the application fully describes the SNF contents, including fuel type, fuel amount, percent enrichment, burnup, cool time, and decay heat. Confirm that the contents evaluated in

the Containment Evaluation section of the application are consistent with those presented in the General Information section of the application. For high burnup fuel, consider fuel fragmentation and releasable fines; coordinate with a materials reviewer about these effects.

Verify that the application identifies the constituents that comprise the releasable source term, including radioactive gases, volatiles, and powders. For SNF packages, the releasable source term is composed of crud on the outside of the fuel rod cladding that can become aerosolized, and fuel fines, volatiles, and gases that are released from a fuel rod in the event of a cladding breach. Source terms, and their bases, for releasable material associated with nonfuel hardware are to be considered; for example, this can include crud that forms on the nonfuel hardware [e.g., burnable poison rod assemblies (BPRAs)]. Although the residual contamination on the inside surfaces of the packaging (from previous shipments) typically can be ignored in the determination of the releasable source term, coordinate with the shielding reviewer whether this issue should be addressed in the Operating Procedures section of the application. Reasonable bounding values for the effective surface activity density (curies per square meter) of the crud on fuel rod cladding are based on experimental determinations. A computer code, such as ORIGEN-S included in the SCALE code system, is used to identify the radionuclides present for a given percent fuel enrichment, burnup, and cool time; Section 5.4.2.1 of this SRP discusses the issues associated with using older codes. Using the individual A2 values for the crud, fines, gases, and volatiles individually, the effective A2 of the releasable source-term mixture can be determined by using the relative release fraction for each contributor and the methods from ANSI N14.5. Table 4-2 gives the release fractions and effective specific activities for the various releasable source-term contributors for SNF with an initial enrichment of 3.2 percent, a burnup of 33,000 megawatt-days per metric ton of initial heavy metal, and a cool time of 5 years. When an applicant uses the release fractions in Table 4-2, ensure that the condition of the fuel described in the application is bounded by the experimental data presented in NUREG/CR-6487. Specifically, these experimental data are based on low-burnup fuel and the release from a single breach of one fuel rod; these data should not be used for SNF described as damaged. The containment and materials reviewers may consider other release fractions for conditions other than those described in NUREG/CR-6487 if the applicant has provided adequate justification.

Based on the mass density, effective specific activity, and effective A2 of the releasable source term, ensure that the maximum permissible release rate and the maximum permissible leakage rate are calculated in accordance with the containment criteria specified in ANSI N14.5. Verify that the maximum permissible leakage rate under normal transport conditions is converted into a reference air leakage rate under standard leak test conditions according to ANSI N14.5 and NUREG/CR-6487.

4.4.3.3 Compliance with containment design criteria

Confirm that the application demonstrates that the package meets the containment requirements in 10 CFR 71.51(a)(1) under normal conditions of transport.

- If compliance is demonstrated by test, verify that the leakage rate of a package subjected to the tests of 10 CFR 71.71 does not exceed the maximum allowable leakage rate for normal conditions. Note, scale-model testing is not a reliable or acceptable method for quantifying the leakage rate of a full-scale package.

Table 4-2 Release Fractions and Specific Activities for the Contributors to the Releasable Source Term for Packages Designed to Transport Irradiated Fuel Rods[a,b]				
Variable	Pressurized-Water Reactor		Boiling-Water Reactor	
	Normal conditions of transport	Hypothetical accident conditions	Normal conditions of transport	Hypothetical accident conditions
Fraction of crud that spalls off of rods, f_C	0.15	1.0	0.15	1.0
Crud surface activity, S_C [Ci/cm^2]	140×10^{-6}	140×10^{-6}	1254×10^{-6}	1254×10^{-6}
Mass fraction of fuel that is released as fines due to a cladding breach, f_F	3×10^{-5}	3×10^{-5}	3×10^{-5}	3×10^{-5}
Specific activity of fuel rods, A_R [Ci/g]	0.60	0.60	0.51	0.51
Fraction of rods that develop cladding breaches, f_B	0.03	1.0	0.03	1.0
Fraction of gases that are released due to a cladding breach, f_G	0.3	0.3	0.3	0.3
Specific activity of gases in a fuel rod, A_G [Ci/g]	7.32×10^{-3}	7.32×10^{-3}	6.28×10^{-3}	6.28×10^{-3}
Specific activity of volatiles in a fuel rod, A_V [Ci/g]	0.1375	0.1375	0.1794	0.1794
Fraction of volatiles that are released due to a cladding breach, f_V	2×10^{-4}	2×10^{-4}	2×10^{-4}	2×10^{-4}

[a]3.2 percent initial enrichment, 33,000 megawatt-days per metric ton of initial heavy metal burnup, 5-year cooling
[b]Applicable only to undamaged fuel. Release fractions for damaged fuel should be justified in the application.
[c]Values in this table are taken from NUREG/CR-6487.

- If compliance is demonstrated by analysis, verify that the structural evaluation shows that the containment boundary, seal region, closure, and closure bolts do not undergo any inelastic deformation and that the materials of the containment system (e.g., seals) are within their maximum and minimum allowable temperature limits when subjected to the conditions in 10 CFR 71.71.

- Demonstration that the packaging meets the maximum allowable leakage rate is verified during acceptance testing of the packaging via the fabrication, periodic, and maintenance leakage rate tests, as discussed in the Acceptance Tests and Maintenance Program section and Operating Procedures section of the application (i.e., pre-shipment leakage rate test). Additional discussion is provided in Section 4.4.5 of this SRP.

4.4.4 Containment Evaluation Under Hypothetical Accident Conditions

The review procedures for containment under hypothetical accident conditions are similar to those under normal conditions of transport and listed in Section 4.4.3 above. This section focuses on the differences relevant to hypothetical accident conditions.

4.4.4.1 Type B transportation packages

The releasable source term, maximum permissible release rate, and maximum permissible leakage rate should be based on package conditions (e.g., temperature, pressure, gas generation by radiolysis) and the 10 CFR Part 71 containment requirements under hypothetical accident conditions. Verify that the temperatures, pressure, and physical conditions of the

package (including the contents) are consistent with those determined in the Structural, Material and Thermal Evaluation sections of the application. Ensure that the reference air leakage rate calculated for hypothetical accident conditions is greater than that determined in Section 4.4.3.1 of this SRP for normal conditions of transport. In the rare event that this is not the case, ensure that the containment criteria for the fabrication, periodic, and maintenance leakage rate tests are based on the hypothetical accident condition's reference air leakage rate, rather than normal conditions of transport.

4.4.4.2 Spent nuclear fuel transportation packages

The pressure in the containment vessel should be based on the conditions of the package under hypothetical accident conditions, including temperature, release of gases and volatiles from fuel rod cladding breaches, and vaporization of contents. Pressure contributions from BPRAs should assume all the backfilled helium and generated helium is released in a failed assembly. Verify that this pressure is consistent with that determined in the Thermal Evaluation section of the application.

The releasable source term, maximum permissible release rate, maximum permissible leakage rate, and conversion to the reference air leakage rate should be based on package conditions and the 10 CFR Part 71 containment requirements under hypothetical accident conditions. Verify that the temperatures, pressure, and physical conditions of the package (including the contents) are consistent with those determined in the Structural Evaluation and Thermal Evaluation sections of the application.

Ensure that the reference air leakage rate calculated for hypothetical accident conditions is greater than that determined in Section 4.4.3.2 of this SRP for normal conditions of transport. In the rare event that this is not the case, ensure that the containment criteria for the fabrication, periodic, and maintenance leakage rate tests are based on the hypothetical accident condition's reference air leakage rate, rather than normal conditions of transport.

The containment requirements of 10 CFR 71.51(a)(2) for hypothetical accident conditions shall be applied individually for Krypton-85 and the other radioactive materials. Krypton-85 shall not exceed 10 A2 in a week. The remaining radioactive materials shall not exceed A2 in a week.

The considerations regarding MOX SNF described earlier for the containment criteria for normal conditions of transport also apply to the evaluation of the containment criteria for hypothetical accident conditions.

4.4.4.3 Compliance with containment design criterion

Ensure that the application demonstrates that the package satisfies the containment requirements of 10 CFR 71.51(a)(2) under hypothetical accident conditions. Demonstration is similar to that discussed in Section 4.4.2 and 4.4.3, except that the package should be subjected to the tests of 10 CFR 71.73, "Hypothetical Accident Conditions."

4.4.5 Leakage Rate Tests for Type B Packages

It is noted that leakage rate tests have acceptance criteria and measurement sensitivities that can assure there are no flaws or leak paths that could result in significant release of radioactive contents and inert gases that may be backfilled within the containment boundary. ANSI N14.5 provides information on leakage rate testing of the containment boundary, including acceptance

criterion and test sensitivity. Likewise, NRC Information Notice 2016-04 and NRC Regulatory Guide 7.4 contain additional relevant information on leak testing and should be reviewed. Verify that personnel approving leakage rate test procedures and those performing the leakage rate tests are qualified. For example, the American National Standard Institute's "ASNT Standard for Qualification and Certification of Nondestructive Testing Personnel," (ANSI/ASNT CP-189) and the American Society for Nondestructive Testing Recommended Practice No. SNT-TC-1A, "Personnel Qualification and Certification in Nondestructive Testing" provide the minimum training, education, and experience requirements for nondestructive testing personnel involved with leakage rate testing. An individual who has obtained certification as an ASNT nondestructive testing (NDT) Level III in leak testing has the qualification necessary to develop and approve written instruction for conducting the leakage rate testing as well as the knowledge to consider practical leakage rate testing issues (e.g., isolation of vacuum pump). Using the reference air leakage rate acceptance criterion and pre-shipment leakage rate acceptance criterion, confirm that the allowable leakage rate tests for the following conditions are performed in accordance with ANSI N14.5:

- fabrication
- maintenance
- periodic
- pre-shipment (assembly verification *after* loading of contents)

Verify that the reference air leakage rate acceptance criterion and test sensitivity for the fabrication, maintenance, and periodic leakage rate tests are included in the Acceptance Tests and Maintenance Program review (see Chapter 9, "Acceptance Tests and Maintenance Program Evaluation," of this SRP). Verify that the leakage rate tests of the containment boundary are performed such that subsequent package fabrication procedures (fabrication not related to the containment boundary) do not adversely affect the integrity of the containment boundary. The pre-shipment leakage rate test acceptance criterion and test sensitivity should be included in the operating procedures evaluation. Note that for "rate-of-rise" and "pressure-drop" leakage rate tests, procedures should indicate that the vacuum pump and gas supply be physically removed or powered off, recognizing that a closed valve may not adequately isolate the pump or supply during the pressure measurement phase.

4.4.6 Appendix

Confirm that the appendix, if included, provides a list of references, copies of applicable references if not generally available to the reviewer, test results, and other appropriate supplemental information.

4.5 Evaluation Findings

Prepare evaluation findings upon satisfaction of the regulatory requirements in Section 4.3 of this SRP chapter. If the documentation submitted with the application fully supports positive findings for each of the regulatory requirements, the statements of findings should be similar to the following:

F4-1 The staff has reviewed the applicant's description and evaluation of the containment system and concludes that:

— the application identifies established codes and standards for the containment system

— the package includes a containment system securely closed by a positive fastening device that cannot be opened unintentionally or by a pressure that may arise within the package

— a package valve or similar device, if present, is protected against unauthorized operation and, except for a pressure-relief valve, is provided with an enclosure to retain any leakage

F4-2 The staff has reviewed the applicant's evaluation of the containment system under normal conditions of transport and concludes that the package is designed, constructed, and prepared for shipment so that under the tests specified in 10 CFR 71.71, "Normal Conditions of Transport," the package satisfies the containment requirements of 10 CFR 71.43(f) and 10 CFR 71.51(a)(1) for normal conditions of transport with no dependence on filters or a mechanical cooling system.

F4-3 The staff has reviewed the applicant's evaluation of the containment system under hypothetical accident conditions and concludes that the package satisfies the containment requirements of 10 CFR 71.51(a)(2) for hypothetical accident conditions, with no dependence on filters or a mechanical cooling system.

The reviewer should provide a summary statement similar to the following:

> Based on review of the statements and representations in the application, the NRC staff concludes that the package has been adequately described and evaluated to demonstrate that it satisfies the containment requirements of 10 CFR Part 71.

4.6 References

10 CFR Part 71, "Packaging and Transportation of Radioactive Material."

American National Standards Institute, ANSI N14.5-2014, "Radioactive Materials—Leakage Tests on Packages for Shipment," New York, NY.

Regulatory Guide 7.4, U.S. Nuclear Regulatory Commission, "Leakage Tests on Packages for Shipment of Radioactive Material," Agencywide Documents Access and Management System (ADAMS) Accession No. ML112520023.

B&PV Division 3 Code American Society of Mechanical Engineers, "ASME Boiler and Pressure Vessel Code, Section III, Division 3, Containment Systems and Transport Packagings For Spent Nuclear Fuel and High Level Radioactive Waste," New York, NY, 2015.

NRC Bulletin 96-04, "Chemical, Galvanic, or Other Reactions in Spent Fuel Storage and Transportation Casks," OMB No. 3150-0011, U.S. Nuclear Regulatory Commission, July 5, 1996.

NRC Information Notice 2016-04, "ANSI N14.5-2014 Revision and Leakage Rate Testing Considerations," 2016, ADAMS Accession No. ML16063A287.

NUREG/CR-6487, U.S. Nuclear Regulatory Commission, "Containment Analysis for Type B Packages Used to Transport Various Contents," UCRL-ID-124822, Lawrence Livermore National Laboratory, Livermore, CA, November 1996.

NUREG/CR-6673, U.S. Nuclear Regulatory Commission, “Hydrogen Generation in TRU Waste Transportation Packages,” UCRL-ID-13852, Lawrence Livermore National Laboratory, Livermore, CA, May 2000.

Oak Ridge National Laboratory, “SCALE: A Comprehensive Modeling and Simulation Suite for Nuclear Safety Analysis and Design,” ORNL/TM-2005/39, Version 6.1, June 2011.

5 SHIELDING EVALUATION

5.1 Review Objective

The objective of this evaluation is to verify that the design of Type B transportation packages meets the external radiation requirements of Title 10 of the *Code of Federal Regulations* (10 CFR) Part 71, "Packaging and Transportation of Radioactive Materials."

5.2 Areas of Review

The NRC staff should review the application to verify that it adequately describes the package and includes adequately detailed drawings. In general, the staff should review the following information to determine the adequacy of the package description:

- description of shielding design
  - shielding design features
  - codes and standards
  - summary tables of maximum external radiation levels
- radioactive materials and source terms
  - source-term calculation methods
  - gamma sources
  - neutron sources
- shielding model and model specifications
  - configuration of source and shielding
  - material properties
- shielding evaluation
  - methods
  - code input and output data
  - fluence-rate-to-radiation-level conversion factors
  - external radiation levels
  - confirmatory analyses

5.3 Regulatory Requirements and Acceptance Criteria

This section summarizes those aspects of 10 CFR Part 71 that are relevant to the review areas, as identified in this standard review plan (SRP) chapter. The NRC staff reviewer should refer to the exact language in the listed regulations. Table 5-1 identifies the regulatory requirements that are relevant to the areas of review covered in this chapter. Table 5-2 identifies the current external radiation level limits in 10 CFR 71.47, "External Radiation Standards for All Packages," that apply to exclusive-use and nonexclusive-use shipments. The table also states the limit in 10 CFR 71.51(a)(2), which applies to both exclusive-use and nonexclusive-use shipments.

Table 5-1 Relationship of Regulations and Areas of Review for Transportation Packages							
Areas of Review	**10 CFR Part 71 Regulations**						
	71.31	**71.33**	**71.35(a)**	**71.41(a)**	**71.43(f)**	**71.47**	**71.51(a)**
Description of shielding design	(a)(1),(b),(c)	(a)			●	●	●
Radioactive materials and source terms	(a)(1),(b)	(b)				●	●
Shielding model and model specifications	(c)			●	●	●	●
Shielding evaluation	(a)(2),(b),(c)		●	●	●	●	●
Areas of Review	**10 CFR Part 71 Regulations**						
	71.61	**71.63**	**71.64(a)(1)(ii),(b)(2)**	**71.71**	**71.73**	**71.74**	**Part 71, App. A**
Description of shielding design			●				
Radioactive materials and source terms		●	●				●
Shielding model and model specifications	●		●	●	●	●	
Shielding evaluation	●		●	●	●	●	●
Note: The bullet (●) indicates the entire regulation as listed in the column heading applies.							

Table 5-2 Package and Vehicle External Radiation Level Limits[a] (continued)				
Transport vehicle use	**Nonexclusive**	**Exclusive Use**		
Conditions of transport	Open or Closed	Open (flatbed)	Open with Enclosure[b]	Closed
Package (or freight container) limits:				
External surface	2 mSv/h [200 mrem/h]	2 mSv/h [200 mrem/h]	10 mSv/h [1,000 mrem/h]	10 mSv/h [1,000 mrem/h]
1 meter [40 inches] from external surface[c]	0.1 mSv/h [10 mrem/h]	No Limit		
Roadway or railway vehicle (or freight container) limits:				
Any point on outer surface	N/A	N/A	N/A	2 mSv/h [200 mrem/h]
Vertical planes projected from outer edges	N/A	2 mSv/h [200 mrem/h]	2 mSv/h [200 mrem/h]	N/A
Top of ...	N/A	Load: 2 mSv/h [200 mrem/h]	Enclosure: 2 mSv/h [200 mrem/h]	Vehicle: 2 mSv/h [200 mrem/h]
2 meters [80 inches] from ...	N/A	Vertical Planes: mSv/h [10 mrem/h]	Vertical Planes: 0.1 mSv/h [10 mrem/h]	Outer Lateral Surfaces: mSv/h [10 mrem/h]
Underside of …	N/A	Vehicle below load: 2 mSv/h [200 mrem/h]		

Table 5-2 Package and Vehicle External Radiation Level Limits[a] (continued)		
Transport vehicle use	**Nonexclusive**	**Exclusive Use**
Occupied spaces	N/A	Cab or sleeper: 0.02 mSv/h [2 mrem/h][d]
Hypothetical accident, 1 meter [40 inches] from package external surface	10 mSv/h [1,000 mrem/h]	

Note: This table is not a substitute for NRC or U.S. Department of Transportation (DOT) regulations on the transport of radioactive materials. See NRC and DOT regulations for current requirements (10 CFR 71.47 and 49 CFR 173.441(a) and (b), respectively).
N/A = not applicable; mrem/h = millirem per hour; mSV/h = millisieverts per hour.
[a]The limits in this table do not apply to excepted packages and empty packages under DOT shipping regulations (49 CFR Part 173, Subpart I, "Class 7 Radioactive Materials"; specifically, 49 CFR 173.421, "Excepted Packages for Limited Quantities of Class 7 (Radioactive) Materials," 173.422, "Additional Requirements for Excepted Packages Containing Class 7 (Radioactive) Materials," 173.423, "Requirements for Multiple Hazard Limited Quantity Class 7 (Radioactive) Materials," 173.424, "Excepted Packages for Radioactive Instruments and Articles," 173.425, "Table of Activity Limits—Excepted Quantities and Articles," 173.426, "Excepted Packages for Articles Containing Natural Uranium or Thorium," and 173.428, "Empty Class 7 (Radioactive) Materials Packaging").
[b]Securely attached (to vehicle), access-limiting enclosure; package personnel barriers are considered as enclosures. See discussion in Section 5.4.1.2 of this SRP chapter for further information.
[c]Transport index may not exceed 10.
[d]Does not apply to private carriers, if exposed personnel under their control wear radiation dosimetry devices in conformance with 10 CFR 20.1502, with exposures and doses controlled and monitored under a radiation protection program satisfying the requirements of 10 CFR Part 20.

The Shielding Evaluation section of the application should describe and analyze the packaging design features and package configurations that are relevant to shielding, including items that increase radiation levels (e.g., streaming paths) as well as those that reduce radiation levels. This section of the application should also discuss how these features and the results of shielding analyses demonstrate compliance with NRC regulations.

The package design and contents descriptions in the application should be sufficient to provide an adequate basis for the shielding evaluation and to allow for independent review, including confirmatory calculations. Depending on package contents, this includes descriptions that allow for analyzing of secondary radiations such as neutrons from subcritical multiplication in spent nuclear fuel (SNF) contents and contributions of radioactive daughters in source and waste packages. The contents descriptions should be consistent with the assumptions made about the contents in the shielding evaluation.

For some packages, it may be desirable to add supplemental gamma shielding as an auxiliary component of the packaging. In these cases, the application must specifically address the inclusion of such shielding to the package in the package description to meet 10 CFR 71.33(a). The certificate of compliance (CoC) would need to specifically authorize the use of this shielding. Additionally, the application must demonstrate that this shielding remains effective during the applicable conditions (10 CFR 71.71, "Normal Conditions of Transport," 10 CFR 71.73, "Hypothetical Accident Conditions," 10 CFR 71.74, "Accident Conditions for Air Transport of Plutonium") to meet 10 CFR 71.35(a). NRC Information Notice 83-10, "Clarification of Several Aspects Relating to Use of NRC-Certified Transport," dated March 11, 1983, presents additional information regarding the use of supplemental shielding.

The application should describe the model(s) used in the shielding analysis to enable independent review, including confirmatory calculations. The model(s) should be consistent with the package design, the contents descriptions, and how the package is intended to be fabricated and operated, as described in the acceptance tests and package operations sections of the

application. The model descriptions should address streaming paths and other locations of shielding changes (e.g., radial surface locations beyond the axial extent of neutron shields, locations of reduced gamma shielding component thickness) and possible positions of package contents in relation to the package's features. The descriptions should include the specifications of the package's shielding components. For nonstandard materials like proprietary neutron shielding and neutron absorbers credited in the analyses, this includes material composition specifications in addition to dimensional specifications. The application should describe differences in package features, dimensions, and material properties for normal conditions of transportation calculations and the hypothetical accident conditions calculations that could affect shielding performance. For example, polymer-based neutron shields usually are assumed to be gone for hypothetical accident conditions. Also, personnel barriers may be credited for normal conditions of transport calculations but not for hypothetical accident conditions.

The application should demonstrate that a package at the minimum shielding effectiveness allowed by the package design, including tolerances, will comply with the NRC regulations for the bounding radiation source(s) of the proposed package contents. The analysis should account for any increases in source terms with time, such as may occur with some package contents that produce radioactive daughters that may have greater source strengths or more penetrating radiation spectra. The analysis should be sufficiently detailed to show compliance for radiation levels at any point of the package surface and at the relevant distances from the package. For packages designed to be used for nonexclusive-use shipments, the analysis should show that the package will not exceed the nonexclusive-use radiation limits in 10 CFR 71.47(a). The NRC expects that packages evaluated to meet the nonexclusive-use limits will be designed, fabricated, and operated to meet these limits during package use. Otherwise, the analysis should show that the package will not exceed the exclusive-use radiation limits in 10 CFR 71.47(b) applicable to how the package is intended to be shipped (see Table 5-2).

The requirements in 10 CFR 71.47 state that each package offered for transportation must be designed and prepared for shipment so that under conditions normally incident to transportation, the package does not exceed the radiation level limits in 10 CFR 71.47(a), except as provided in 10 CFR 71.47(b). The NRC's practice is to ensure the analyses for compliance with the 10 CFR 71.47 limits include the impacts of the evaluations for normal conditions of transport described in 10 CFR 71.71. Inclusion of the impacts of these evaluations reasonably bounds the impacts of "conditions normally incident to transportation," though they are not necessarily the same thing. As described in 10 CFR 71.43(f) and 10 CFR 71.51(a)(1), the package must be designed, fabricated, and prepared for shipment so that under the 10 CFR 71.71 evaluations, the package's surface radiation levels do not significantly increase and the effectiveness of the packaging is not substantially reduced. As identified in the international regulations for radioactive materials transportation [see Specific Safety Requirements No. SSR-6, "Regulations for the Safe Transport of Radioactive Material", 2012 Edition, paragraph No. 648(b)], the international community interprets "significant increase" to mean an increase in excess of 20 percent of the package radiation levels in the preevaluation condition. If the application demonstrates that 10 CFR 71.47 limits are not exceeded for a package evaluated in accordance with 10 CFR 71.71, the NRC accepts the package as sufficient to meet the requirements in 10 CFR 71.43(f) and 10 CFR 71.51(a)(1) for the shielding evaluation.

The application should identify and describe, as applicable, the use of any industry codes and standards or NRC guidance as part of the package's shielding design and in the shielding evaluation. While applicants are not required to comply with NRC guidance, the use of NRC

guidance is expected to facilitate the staff's review process in evaluating package designs and confirming compliance with NRC regulations.

The following documents also provide useful guidance regarding information the application should include in regard to the package's shielding design and the shielding evaluation:

- Regulatory Guide (RG) 7.9, "Standard Format and Content of Part 71 Applications for Approval of Packages for Radioactive Material," issued March 2005, Section 5, "Shielding Evaluation."

- NUREG/CR-5502, "Engineering Drawings for 10 CFR Part 71 Package Approvals," issued May 1998.

- NUREG/CR-6407, "Classification of Transportation Packaging and Dry Spent Fuel Storage System Components According to Importance to Safety," issued February 1996.

At a minimum, the application should present information consistent with this SRP and guidance in RG 7.9 and other necessary supplemental information used in confirming compliance with NRC regulations. In instances where an applicant has taken a different approach to specific provisions of NRC guidance, the application should provide the basis and justification for taking that approach. The application should include a list of references with applicable pages from referenced documents (providing copies if the references are not generally available); justification of assumptions and analytical procedures used in code models, code tests, and benchmarking results; descriptions of computer programs; sample input and output files supporting all major conclusions (e.g., an input or output file for each type of calculation, for different source or package configurations, and for the normal conditions of transport and for the hypothetical accident conditions); tabulations of source terms, radionuclide distributions, enrichment, fuel burnup rates, isotopic depletion, concentrations, and inventories; tabulations of flux rates; and fluence-to-radiation level conversion factors. The applicant may also consider including photographs of shielding components and assembly.

5.4 Review Procedures

The NRC conducts shielding reviews of Type B packages. This includes all radioactive materials for which the applicant seeks to obtain approval in a CoC as approved contents of the Type B package. If the applicant seeks to add materials that are of Type A quantities to the approved contents of the Type B packages, whether to be shipped alone in the package or together with Type B contents, review the application to ensure that the applicant has adequately evaluated the Type B package for these contents, applying the guidance in this SRP chapter as appropriate. The NRC does not conduct reviews of Type A packages as, with the exception of Type AF (fissile) packages, the regulations allow self-certification of these packages. For Type AF packages, shielding reviews are not necessary because, by the nature of the contents, radiation source terms and radiation levels for these packages are negligible.

Ensure that the applicant has described and evaluated the package design, including the shielding and the contents with their associated source terms, to meet all applicable external radiation requirements of 10 CFR Part 71 under normal conditions of transport and hypothetical accident conditions. For packages for the shipment of plutonium by air, ensure that the applicant has also evaluated the package design to meet the external radiation requirements in 10 CFR 71.64(a)(1)(ii) and (b)(2). For such a package, use methods and processes similar to those described in this chapter for evaluating compliance with the external radiation

requirements for normal conditions of transport and hypothetical accident conditions to evaluate compliance with the requirements for air shipments of plutonium.

As part of the evaluation, review and consider the package and contents descriptions presented in the General Information section of the application. Coordinate with the reviewers of the other sections of the application, as applicable and described in the review procedures in this SRP chapter, to ensure that the applicant adequately evaluated the packaging and the contents for both normal conditions of transport and hypothetical accident conditions and to ensure that the package will be fabricated, operated, and maintained consistent with the shielding evaluation and in a manner to meet the regulations. This includes ensuring that the acceptance tests include appropriate shield effectiveness tests for those packaging components relied on for shielding. Figure 5-1 illustrates the information flow and interdependency between the reviews for other sections of the application and the shielding evaluation review.

Also, as part of the review, ensure that the CoC includes appropriate conditions with respect to the package design, allowable package contents, package operations, and package acceptance and maintenance tests to ensure that the shielding performance of the package will be as designed and meet regulatory requirements. To do this, see also the guidance in Chapter 1, "General Information Evaluation," Chapter 8, "Operating Procedures Evaluation," and Chapter 9, "Acceptance Tests and Maintenance Program Evaluation" of this SRP and work with the reviewers of those chapters.

In addition to the guidance provided in this chapter, consult the information and guidance provided in the appropriate section of Appendix A, "Description, Safety Features, and Areas of Review for Different Types of Radioactive Material Transportation Packages," and the other appendices to this SRP, as applicable. Appendix A includes useful guidance that is specific to several of the package types, with the exception of Tritium-Producing Burnable Absorber Rod (TPBAR) packages, which the NRC certifies. Appendix E, Description and Review Procedures for Irradiated Tritium-Producing Burnable Absorber Rods Packages," includes guidance and other potentially useful information for reviews of TPBAR packages. Appendix B, "Differences between Thermal and Radiation Properties of MOX and LEU Radioactive Materials," and Appendix C, "Differences between Thermal and Radiation Properties of MOX and LEU Spent Nuclear Fuel," also provide useful information to inform reviews of mixed oxide (MOX) fresh fuel and MOX SNF packages, respectively. Except for the information in Appendix C for MOX SNF packages, guidance regarding SNF, including research reactor and commercial [both low-enriched uranium (LEU) and MOX] SNF, is contained within this chapter.

5.4.1 Description of Shielding Design

Ensure that the application includes information about the packaging design. This design information is typically captured in engineering drawings submitted in the General Information section in the application. RG 7.9, NUREG/CR-5502, and NUREG/CR-6407 provide information and describe the recommended format and technical contents for drawings submitted in package applications. Verify that the engineering drawings focus on and provide the necessary details for the features of the package and configuration(s) of components that are important in assessing the shielding performance of the package and demonstrating compliance with 10 CFR Part 71 regulations. These details include dimensions with tolerances as well as materials specifications with tolerances for shielding, such as proprietary neutron shields and other nonstandard materials, lead gamma shielding, and neutron absorbers credited in the analyses. The degree of specificity of the package component descriptions in the drawings should be commensurate with the stated safety functions and with the sensitivity of package

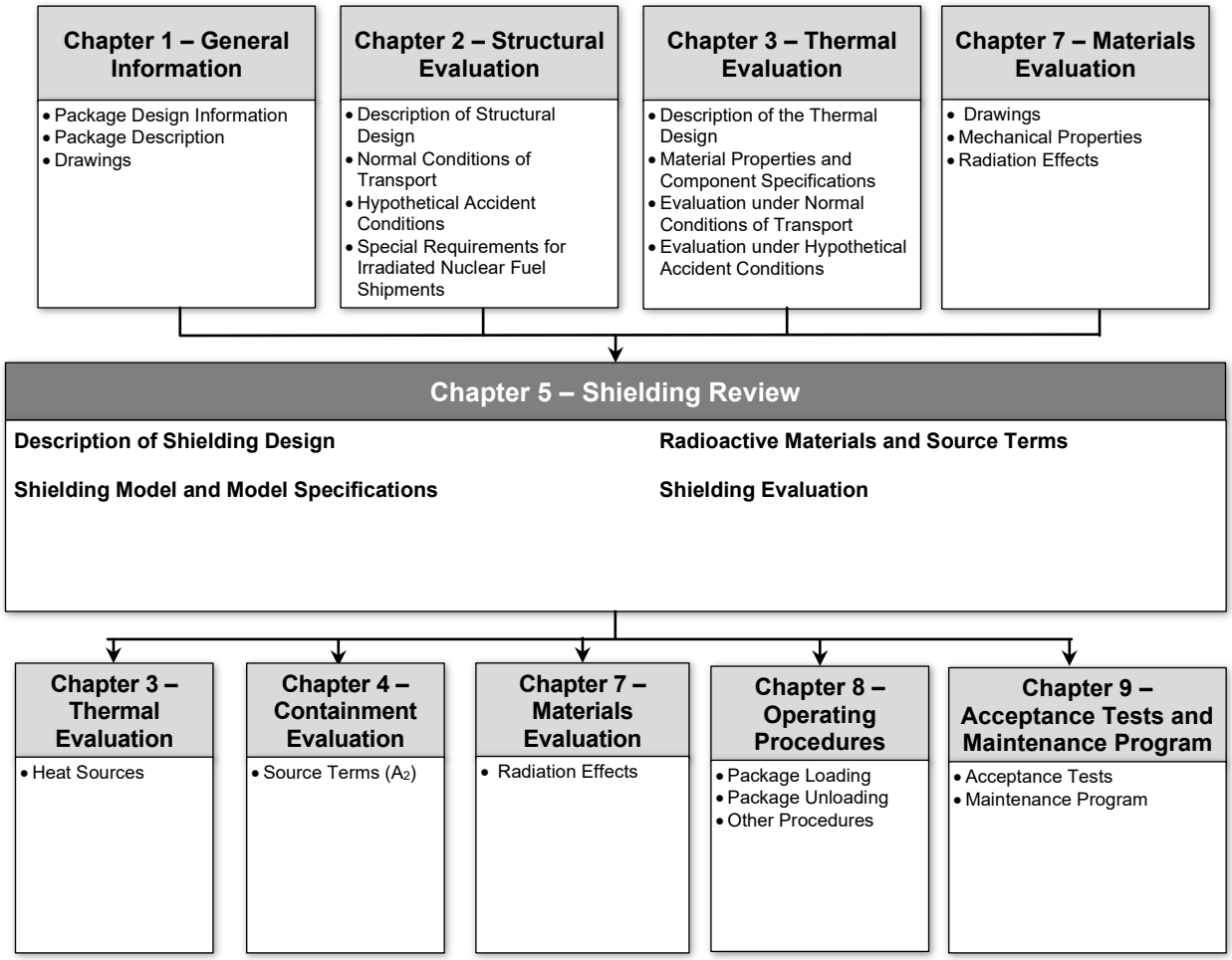

Figure 5-1 Information Flow for the Shielding Evaluation

shielding performance to the properties of the package components (material and dimensional properties, including tolerances). With regard to tolerances, ensure that the drawings specify reasonable tolerances for dimensions and material properties because packaging features may be subject to some variability in fabrication. Whatever tolerances are specified, ensure that the applicant's shielding analyses appropriately use these tolerances to determine maximum package radiation levels (see Sections 5.4.3.1 and 5.4.3.2 of this SRP chapter).

Review the description and evaluation of shielding design features in the Shielding Evaluation section of the application. Ensure that the description, including any sketches and figures, is consistent with that given in the General Information section of the application, including the engineering drawings. Verify that the application identifies any industry codes and standards or NRC guidance the applicant used in the shielding design and evaluation, and verify that the applicant used them properly.

5.4.1.1 Shielding design features

Ensure that the application's description of the shielding design features addresses those items that are important to evaluation of the package's shielding performance, including, but not limited to, the following topics:

- dimensions, tolerances, configurations, and densities of materials for neutron and gamma shielding and those packaging components that can affect package shielding performance; these components include both those that reduce package shielding performance (e.g., streaming paths) as well as those that enhance it, both components the applicant's shielding evaluation considered and those that it did not

- material composition specifications and tolerances on those specifications (e.g., minimum boron and hydrogen content) for nonstandard materials such as proprietary neutron-shield materials

- stability and potential deformation or materials properties changes of shielding materials if exposed to elevated temperatures

- materials and dimensional specifications, with their respective tolerances, of neutron absorbers that are credited in the shielding analyses; the materials specifications should include mass density, atomic density, or areal density of the absorbing material (e.g., boron-10)

- structural components that maintain the package contents in a fixed position within the package, whether for just normal conditions of transport or also for hypothetical accident conditions

- integrity of closure features and seals (and other relevant features) relied on to maintain package contents within certain packaging components; examples include seals or closures of internal containers loaded in the package for which the shielding evaluation assumes the package contents remain in the sealed containers and cannot spread to other areas in the package cavity. The application should include package operating procedures, acceptance tests, and maintenance program checks to ensure the closure features and seals do not allow migration of contents to unintended areas of the package cavity

- dimensions of the transport vehicle, and potentially the impact limiters, that are considered in the shielding evaluation when the applicant's evaluations are for demonstrating compliance with the exclusive-use limits

- appropriate dimensions and properties, including tolerances, of supplemental shielding of which an applicant may wish to allow use with the package (as an auxiliary component of the packaging)

For applications that include allowance of the use of supplemental shielding, coordinate with the General Information review to ensure that the engineering drawings include appropriate details for this shielding. Also, coordinate with the structural, materials, and thermal reviewers to ensure that the application demonstrates that shielding remains effective for the conditions for which the shielding evaluation credits this shielding. Additionally, coordinate with the reviewers of the Package Operations and Acceptance Tests and Maintenance Programs sections of the application to ensure that these sections adequately address the use of this shielding, as appropriate. Ensure, that, if found acceptable, the CoC specifically addresses the use of this supplemental shielding. These above requirements would not apply to any supplemental shielding not attached to the package, the sole purpose of which is to reduce external radiation levels to below regulatory requirements (e.g., additional shielding attached to the sides of the trailer or truck cab) (see NRC Information Notice 83-10).

Confirm with the thermal and materials reviewers that shielding materials will not exceed their allowable maximum temperature limits under normal conditions of transport and, as applicable, hypothetical accident conditions. Also confirm with these reviewers that shielding properties will not degrade during the service life of the packaging (e.g., degradation of hydrogenous materials). For evaluations that credit the neutron absorbers, coordinate with the criticality, materials, and acceptance tests and maintenance program reviewers to confirm the proper specifications of the absorber properties and allowable variations of those properties (see Sections 6.4.1.2, 6.4.3.2, 7.4.7, 9.4.1.6, and 9.4.2.4 of this SRP) and to confirm that the application includes appropriate qualification and acceptance testing of these absorbers.

Coordinate with the materials and acceptance tests and maintenance reviewers to ensure that the application contains appropriate and adequate acceptance tests and maintenance programs to ensure that the package shielding will be fabricated and maintained consistent with the package design and in a manner to meet the regulations (see Sections 7.4.6, 9.4.1.7, and 9.4.2.5 of this SRP). In general, appropriate acceptance tests include gamma scans and measurements of gamma and neutron radiation levels over the package surfaces where gamma and neutron-shielding materials are located in the design. Also, appropriate maintenance programs generally include periodic measurements of radiation levels. Ensure the acceptance criteria for acceptance tests and maintenance programs are consistent with and based on the packaging and contents descriptions in the application. For radiation-level scan or measurement acceptance tests and maintenance program tests, appropriate acceptance criteria would be measured radiation levels that do not exceed those that are calculated for the same radiation source(s) used in the test for package shielding at the minimum properties specified in the engineering drawings over the measured package surfaces. For acceptance tests, ensure that the entire package surface where the shielding is located is tested, whereas a reasonable number of appropriate locations on the package surface may be tested for maintenance program tests. RG 7.7, “Administrative Guide for Verifying Compliance with Packaging Requirements for Shipping and Receiving of Radioactive Material,” Section 2.1.1, “Elimination of Voids,” and NUREG/CR-3854, “Fabrication Criteria for Shipping Containers,” Section 3.2, “Acceptance Testing,” issued March 1985, provide additional guidance and information concerning acceptable shielding effectiveness test methods. Confirm that the acceptance tests also include appropriate chemical and physical tests of proprietary or nonstandard shield materials (e.g., polymer-based neutron shields). Note that for a package, or portions of the package, that rely only on carbon steel or stainless steel packaging components, which are generally fabricated to industry standard specifications, for shielding, visual inspections and dimensional inspections are generally sufficient acceptance tests for ensuring shielding performance. In other words, no additional acceptance tests would be needed for such a package or portions of the package.

Many materials have been used as gamma shielding in the different package types that the NRC has certified. These materials include steel, lead, tungsten, and depleted uranium. Depleted uranium rapidly and significantly oxidizes when exposed to heat and air, although the result may not be evident until some time after the conclusion of the 10 CFR 71.73 thermal test. Therefore, confirm with the structural and materials reviewers to ensure that the 10 CFR 71.71 and 10 CFR 71.73 impact tests, including puncture tests, and the other impact tests that may be appropriate for the package (e.g., 10 CFR 71.74 impact tests) do not damage the packaging cavity containing the depleted uranium in a manner that exposes the depleted uranium to the environment.

5.4.1.2 Summary tables of maximum external radiation levels

Confirm that the application describes the type of use or shipment for which the package is designed or evaluated (i.e., exclusive-use or nonexclusive use). Review the application's summary table listing of expected maximum radiation levels. As described below and in Section 5.4.4.4 of this SRP, ensure that the applicant calculated the maximum radiation levels for all relevant and appropriate surfaces. The summary table should include the maximum radiation levels for these package surfaces and the appropriate distances from these surfaces for the type of transport for which the package is designed and intended. The table should include total radiation levels as well as the separate gamma and neutron components of the radiation levels. For packages with multiple contents, the table should also identify the source or sources that produces the maximum radiation levels. For SNF packages, this includes specifying the burnup, enrichment (or uranium and plutonium composition for MOX SNF), and the cooling time combinations. As part of this review, examine variations in radiation levels at different package locations for general consistency (e.g., decreasing radiation levels with increasing distance or increasing shielding effectiveness), given shielding modeling assumptions and regulatory requirements and NRC guidance. Verify that the radiation levels are within the regulatory limits listed in 10 CFR 71.47 (see Table 5-2) and 10 CFR 71.51(a) for the appropriate conditions and types of shipment. Note that the accident conditions limit for shipments of plutonium by air is given in 10 CFR 71.64(a)(1)((ii), which is essentially the same as the limit for all other packages given in 10 CFR 71.51(a)(2).

Consult Figure 5-2 below in reviewing the application to identify, based on the package design and calculated radiation levels in the application, the surfaces and locations for which the application should provide radiation level results and the appropriate limits for those surfaces and locations. Figure 5-2 illustrates how the radiation level limits apply to different shipment configurations for both exclusive-use and nonexclusive-use shipments. Note that the current version of the DOT's Pipeline and Hazardous Materials Safety Administration's "Radioactive Material Regulations Review" document is another source of useful information regarding transportation requirements, including package radiation limits.

The application may include results for the package's transport index (TI). The value of the TI is the maximum radiation level at 1 meter [40 inches] from the package's surface in mrem/hr. For packages designed and evaluated for nonexclusive-use transportation, the application will include this value, and this value must not exceed the limit of 10 specified in 10 CFR 71.47(a). For exclusive-use shipments, 10 CFR 71.47 does not include a limit for the TI. While a TI is calculated in the application, the actual TI for a package is determined by measurement at the time of shipment. Ensure that the measured TI is placed on the package label. The TI is used in shipments to ensure proper controls are exercised for the shipments, including limiting the number of packages that may be shipped on a conveyance [see 49 CFR 173.441(c)–(e)].

Ensure that the package operating procedures assure the package will be used consistent with the shielding evaluation. This includes ensuring that measured radiation levels that exceed expected levels result in checks that the package has been properly loaded and prepared for transport. For example, for a package that is evaluated to meet the nonexclusive-use limits in

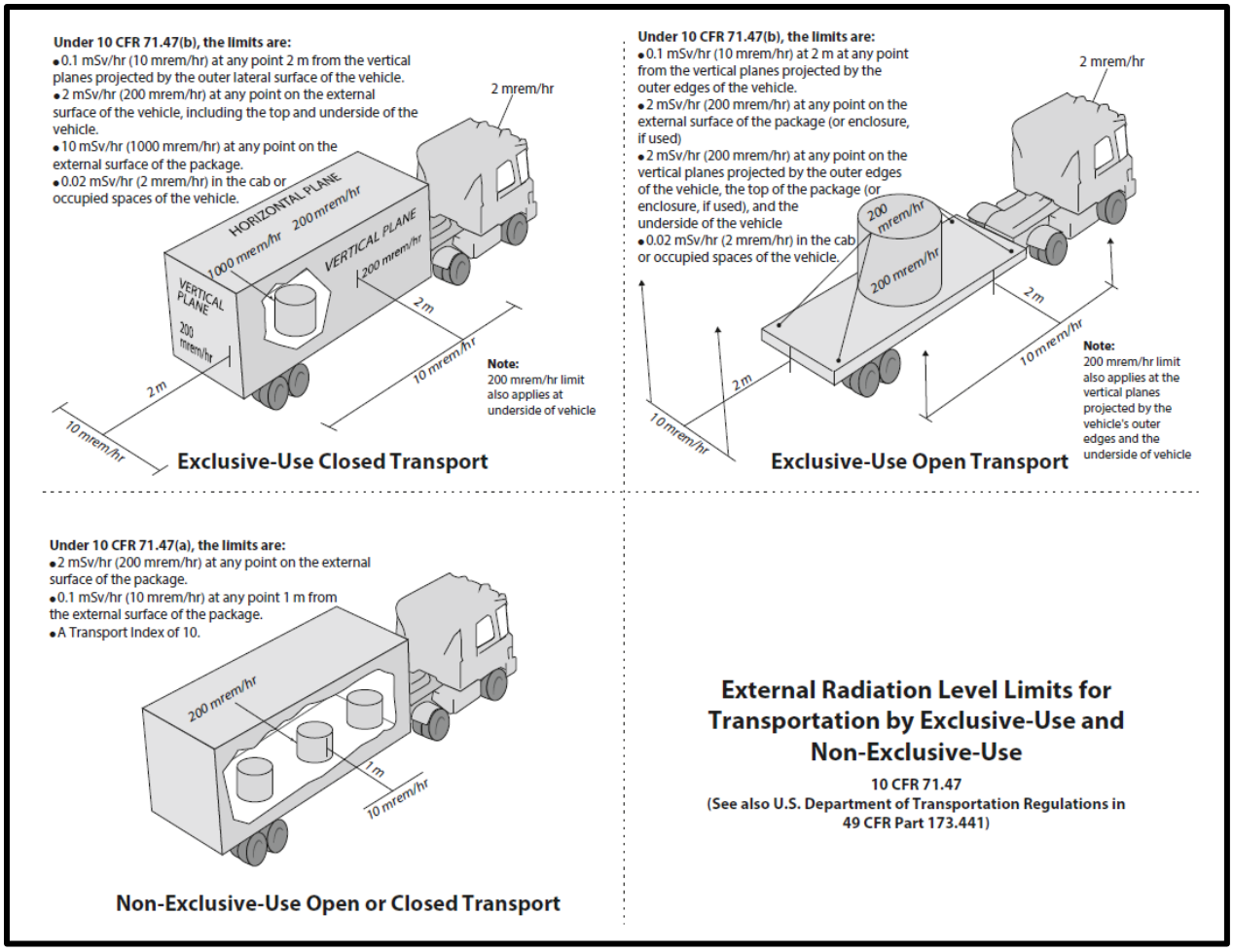

Figure 5-2 Illustration of surfaces to which regulatory radiation limits apply for exclusive-use and nonexclusive-use shipments

10 CFR 71.47, the measured radiation levels for a package prepared for shipment should, in general, not exceed the limits for nonexclusive use.

Confirm that the application states the contents and contents specifications that result in the maximum package radiation levels. For packages with a variety of contents or contents specifications with different source terms or spectra or different source configurations within the package, the same contents or contents specifications may not result in the maximum package radiation levels at all locations of the package surface or at the specified distances from the package surfaces. This may be true for the same package configuration and conditions (e.g., normal conditions of transport). This may also be true for different package configurations and conditions (e.g., normal conditions of transport versus hypothetical accident conditions). Therefore, ensure that the application states the contents and contents specifications that result in maximum radiation levels for each package surface (and at distance) for each package configuration and each set of conditions. For SNF packages, this includes such parameters as fuel type, maximum burnup, minimum enrichment, minimum cooling time, conditions of the SNF (e.g., damaged or undamaged), and the type of nonfuel hardware loaded with the fuel. For SNF, gamma and neutron radiation levels can significantly vary or be the greatest at different fuel specifications. Also, gamma radiation may be more dominant for some package surface locations or package configurations or set of conditions, and neutron radiation may be more dominant in other instances.

5.4.2 Radioactive Materials and Source Terms

Confirm that the contents used in the shielding analyses are consistent with those specified in the General Information section of the application. The contents description should be consistent with the package evaluation. Ensure that the specifications in the General Information section of the application are adequate to define the allowable contents in terms of the shielding evaluation (i.e., to ensure the shielding evaluation adequately bounds the allowable package contents). For applications with less-detailed or broader-scoped descriptions of the contents, the shielding analyses will need to address the variations in contents characteristics that the contents descriptions will allow in terms of properties relevant to shielding. The more detailed or limited in scope the contents description is, the more refined and focused the shielding evaluation can be. The level of detail may be dependent upon the package type as well. For example, a Type B waste package may have a broader description of the contents than a source package designed for multiple sources. If the package is designed for multiple types of contents or contents with a variety of specifications (e.g., SNF), ensure that the applicant clearly identified and evaluated the contents and contents specifications producing the highest external radiation levels at each location. Confirm that the identified contents and contents specification do indeed result in the highest, or bounding, radiation levels at each location.

Ensure that the contents descriptions in both the General Information and Shielding Evaluation sections of the application are sufficient to define the source terms of the allowable contents and the allowable configurations of the source terms, including possible configuration changes under normal conditions of transport and hypothetical accident conditions. Important specifications include the radionuclides present in the contents and their maximum quantities (e.g., maximum activity or maximum specific activity for radioactive material packages [i.e., source packages)], the contents' physical and chemical properties and form, and possible reconfiguration or distribution changes of nuclides and contents. For example, in describing how the radionuclides are distributed within the contents (including how such limits in the CoC conditions are to be interpreted), the applicant may characterize the distribution using terms such as "distributed throughout" and "essentially uniformly distributed," as those terms are defined in NUREG-1608, "Categorizing and Transporting Low Specific Activity Materials and Surface Contaminated Objects," Section 4.2.2. Verify that the applicant correctly identified and characterized all potential radiation sources, even if analysis shows they contribute negligibly to package radiation levels.

Note that a contents specification of simply a set number of A values (i.e., Type A quantities[2]) of radioactive materials or radionuclides is not sufficient for the reasons described in Regulatory Issue Summary (RIS) 2013-04, "Content Specification and Shielding Evaluations for Type B Transportation Packages," dated April 23, 2013. While there are different ways to specify the contents, whatever method is chosen to specify or define the allowable contents, the shielding evaluation should support this definition. The Package Operations section of the application may also need to include specific operations descriptions to ensure that the package user correctly loads the package in accordance with the contents specifications. RIS 2013-04 contains some examples of contents specifications and the associated shielding evaluations the staff has accepted along with the conditions for that acceptance.

For commercial SNF, ensure that the specifications include such things as the fuel types, fuel conditions (e.g., damaged, undamaged; see Section 7.4.14.1 of this SRP for guidance regarding

[2] See the definition of a Type A quantity in 10 CFR 71.4, "Definitions."

fuel condition), assembly hardware specifications (material masses and cobalt impurity levels per axial zone), nonfuel hardware (NFH) specifications, maximum burnups, minimum enrichments (fissile uranium and plutonium specifications for MOX SNF), minimum cooling and decay times, and arrangements in the package. NUREG/CR-6802, "Recommendations for Shielding Evaluations for Transport and Storage Packages," Section 3.3.1, "Active Spent Fuel Region Isotopics," and Appendix B, "Nuclide Importance and Parameter Sensitivity Study for PWR/BWR Source Term Generation," issued May 2003, include information about various commercial SNF parameters and their effects on the source term. Also, while written for SNF storage casks, NUREG/CR-6716, "Recommendations on Fuel Parameters for Standard Technical Specifications for Spent Fuel Storage Casks," issued March 2001, contains information that can be useful for reviewing the commercial SNF contents specifications for a transportation package.

If the contents include high-burnup commercial SNF [i.e., SNF with burnups in excess of 45,000 megawatt-days per metric ton uranium (MWd/MTU)], ensure the contents specifications include how the high-burnup fuel is to be treated, whether as damaged fuel or undamaged fuel, or in some other manner. Coordinate with the materials evaluation reviewer to ensure that the application supports the basis for the applicant's treatment of high-burnup fuel.

For a commercial SNF package, also ensure that the specifications for any NFH contents include the hardware types, component materials and masses per axial zone, quantities, arrangements in the package, maximum burnups, minimum cooling times, neutron flux factors, cobalt impurity levels and other activated materials (e.g., hafnium, silver-indium-cadmium), neutron source types, and strengths. Ensure that the application addresses specifications for those NFH types that may have multiple configurations (e.g., thimble plug devices that may also have water displacement or absorber rods).

For commercial SNF enrichments and burnups, it is acceptable for the values to be assembly-average minimum and assembly-average maximum, respectively, though calculation of the assembly average may require additional consideration for fuel with axial blankets. Natural uranium blankets effectively increase the burnup in the middle of the assembly's active fuel zone, with greater effect as the length of the blankets increases. Variations in fuel assembly type play a secondary role for pressurized-water reactor (PWR) fuel. For boiling-water reactor (BWR) fuel, part-length rods, void fractions, and channel sizes may also affect the strengths of neutron and gamma sources. Ensure that the contents specifications and source-term calculations for SNF that include MOX or thoria properly account for unique aspects of these fuel materials. These aspects include contributions from nuclides produced from fuel irradiation and from natural decay of fuel materials and buildup of nuclides with significant radiations at longer cooling times for fuel with short decay times (e.g., Tl-208 in thoria-bearing fuel).

For commercial SNF packages, also ensure that the application contains specific information concerning reactor operations that affect the SNF source term. Several NRC technical reports (specifically, NUREG/CR-6716, but also NUREG/CR-6700, "Nuclide Importance to Criticality Safety, Decay Heating, and Source Terms Related to Transport and Interim Storage of High-Burnup LWR Fuel," issued January 2001; NUREG/CR-6701, "Review of Technical Issues Related to Predicting Isotopic Compositions and Source Terms for High-Burnup LWR Fuel," issued January 2001; and NUREG/CR-6798, "Isotopic Analysis of High-Burnup PWR Spent Fuel Samples From the Takahama-3 Reactor," issued January 2003) discuss the potential effects of other parameters not typically included in the CoC conditions for commercial SNF package contents limits (e.g., moderator soluble boron concentrations, maximum poison loading, minimum moderator density (for BWR fuels), and maximum specific power). For example, the

net impact of moderator density on package radiation levels is expected to be low for PWR fuels. However, be aware that the axial variation in moderator density in BWR cores can have a measurable effect on the axial variation of radiation levels for a BWR SNF assembly. The radiation levels may increase near the top of the assemblies where the moderator density was the lowest. This is particularly important for neutron sources because reduced moderator density will harden neutron spectrum and hence induce more actinide production.

For setting commercial SNF contents limits in the CoC, ensure the application uses proper parameters and specifications that are readily inspectable and with which a package user can easily determine compliance. Several of the parameters described above fit this purpose (e.g., minimum enrichment, maximum burnup, minimum decay time, maximum uranium mass). However, specific gamma and neutron source terms do not and so should not be used in the CoC to describe the allowable SNF contents.

For research SNF packages, ensure that the application adequately describes these SNF contents. Some items for commercial SNF also apply to research SNF. These specifications include maximum burnup, minimum enrichments (or fissile material specifications), assembly hardware, fuel condition, and appropriate assembly physical parameters (e.g., plate-type fuel, dimensions). The CoC description of the contents should include those parameters important for defining the source terms for the research SNF.

5.4.2.1 Source-term calculation methods

Ensure that the applicant has accurately determined the source terms associated with the proposed package contents and has used appropriate methods for the determination. This may involve the use of published data sources, which may be useful for contents of source packages with limited numbers of radionuclides present in the package, or the use of computer codes. The International Commission on Radiological Protection (ICRP) Publication 38, “Radionuclide Transformations—Energy and Intensity of Emissions,” is an example of such data source, though more recent data sources (e.g., ICRP Publication 107, “Nuclear Decay Data for Dosimetric Calculations”) are available. Depending upon the shielding code used to calculate the package radiation levels, the code may have source information built in already. This is the case for the MicroShield® code,[3] which allows selection of the radionuclides present in the source and the capability to specify the quantity (in curies or becquerels).

The SCALE code system’s ORIGEN-ARP module also has the capability to calculate the source terms from commercial SNF contents as well as specific radionuclides and other source materials (e.g., (α,n) neutron sources). The code can provide results in a variety of forms, including an energy spectrum with total source strength. For commercial SNF calculations, ORIGEN-ARP provides more of a rough estimate for source terms since it interpolates on libraries generated for specific assembly types with set characteristics for the ranges of enrichment, burnup, and decay time values used to generate those libraries. Other modules and sequences in the SCALE code system have been developed to calculate SNF source terms, including for research SNF, and provide more flexibility and user control over the assembly parameters for calculating them. These include ORIGEN-S, SAS2H and, in more recent versions of SCALE, TRITON.

---

[3] The MicroShield code was developed by Grove Software, 4925 Boonsboro Road #257, Lynchburg, Virginia, 24503, http://www.radiationsoftware.com.

For applications that use published data sources, ensure that the data source has a strong pedigree; that is, the source is published by a well-known and trusted entity and the data have been properly validated and are publicly available. Ensure that the applicant has used the correct source term data from the published source in the shielding analyses. Also, confirm that the applicant has included the data for radionuclides that may also be present that are decay products of the proposed contents and that the contents description addresses the decay products. In various cases, the decay products may have significant impacts on and even be the dominant contributor to the package radiation levels. In such cases, ensure that the applicant has addressed and correctly determined the source term for an appropriate decay time that will maximize the radiation levels from the parent radionuclide and daughter radionuclides. The capability for this determination may also be included in the shielding code as well, as is the case for some versions of MicroShield.

For applications that use computer codes to determine source terms, verify that the applicant used a computer code, such as ORIGEN-S, that is well benchmarked and recognized and widely used by industry. If a vendor proprietary code is used, check the code validation and verification records and procedures, preferably with sample testing problems. Although easy to use, use of ORIGEN-2 (including ORIGEN-2.1) and the U.S. Department of Energy, Office of Civilian Radioactive Waste Management (OCRWM) Characteristics Database (TRW 1992) should be discouraged. Both have energy group structure limitations. For example, for ORIGEN-2, many libraries are not appropriate for burnups exceeding 33,000 MWd/MTU. Also, ORIGEN-2 and the OCRWM database are no longer maintained by the original developer and are based on outdated data that may contain errors. If the applicant uses a computer code that is designed for reactor analyses (e.g., CASMO) for source-term calculation, ensure that the code has been used in such a way that the calculations yield appropriate results to use as source terms in the shielding analysis. This includes appropriate consideration of unique aspects of any proposed SNF contents that include MOX or thoria.

Ensure that the applicant has provided appropriate descriptive information, including validation and verification status, and reference documentation. Determine whether the computer code is suitable for determining the source terms and if it has been correctly used. Pay particular attention to “Area of Applicability” to verify whether the application falls into the parameter ranges for which the code is validated. Determine whether the computer code is appropriately applied and that for SNF packages, the application includes verification that the chosen cross-section library is appropriate for the fuel specifications being considered. For example, many libraries are not appropriate for a commercial SNF burnup exceeding 45,000 MWd/MTU because validation data are limited at high burnups. If the applicant has used the code outside its validated parameter ranges, ensure that the applicant has adequately justified the acceptability of such use, including addressing uncertainties in the analysis results that result from this use.

Verify that the applicant has adequately addressed calculational error and uncertainties of the computer codes used to determine the radiological and thermal source terms for the shielding analyses for SNF packages (and for other packages, if appropriate). As part of this determination, consider factors such as other conservative assumptions and design margins in the analysis and maximum assembly heat loads for the design basis combination (or combinations) of fuel, burnup, enrichment, and cooling time. For example, adjustments to source-term values or calculation bases or other aspects of the shielding analysis or reduced decay heat or other parameter limits (versus low burnup fuel) may be necessary to compensate for uncertainties in the source-term calculations for commercial fuel with high burnups. An

acceptable approach to address calculation errors and uncertainties is to establish a bounding value (or values) with justified conservatisms.

When reviewing the commercial SNF source-term calculations, also consider that nuclide importance changes in high-burnup fuels as a function of burnup and cooling time. The data for benchmarking the calculations and computer codes are limited at high burnups. Several NRC-sponsored studies (e.g., ORNL/TM-13315, "Validation of SCALE (SAS2H) Isotopic Predictions for BWR Spent Fuel" issued September 1998; ORNL/TM-13317, "An Extension of the Validation of SCALE (SAS2H) Isotopic Predictions for PWR Spent Fuel" issued September 1996; NUREG/CR-6700; NUREG/CR-6701; and NUREG/CR-6798) provide additional information on high-burnup source-term issues.

Ensure that the application describes the source terms in a format that is compatible with the shielding calculation input, including energy spectrum structure where applicable. For some packages or some package contents and for some shielding codes, the nuclide and its activity may be sufficient. In other cases, this may require specification of radiation type, energy spectrum, and total emission rate in particles per second per some unit basis (e.g., neutron/sec per assembly for SNF). Also, ensure that the application addresses any secondary radiations produced by reactions within the package contents or the package components. This includes gammas produced by (n,γ) reactions or neutrons produced by subcritical multiplication or (α,n) reactions. For package contents with significant β emitters, particularly when the package can be used to ship such contents without significant γ-emitting nuclides present in the contents in significant quantities, this also includes bremsstrahlung. When bremsstrahlung should be accounted for, ensure the applicant has used an appropriate method for estimating the source. One such method is included in "Introduction to Health Physics" (Cember 1996).

Coordinate with the thermal reviewer to determine the need to evaluate the applicant's calculation of the package contents' decay heat. Often, the same codes used to determine radiation source terms can also be used to calculate decay heat. Other methods are also available for determining decay heat for SNF. RG 3.54, Revision 2, "Spent Fuel Heat Generation in an Independent Spent Fuel Storage Installation," describes a few such methods. Verify that the application adequately describes the calculation method and that the method is appropriate for and correctly used to determine the decay heat for the package contents. Ensure that the analysis also appropriately identifies and accounts for uncertainties in the decay heat analysis, as appropriate.

Perform independent calculations to confirm the applicant's calculated radiation source terms and decay heat levels, as appropriate. Perform independent calculations, as needed, to confirm that the applicant has properly determined the bounding source terms for the package contents. Support the containment review, as needed, by verifying the quantities of certain nuclides (e.g., krypton-85, tritium, and iodine-129) the applicant used to analyze releases of radioactive material during normal conditions of transport and hypothetical accident conditions. Confer with the containment reviewer to determine the need to verify these nuclide quantities.

5.4.2.2 Gamma sources

Based on the specified package contents, verify that the applicant calculated the maximum gamma source strength and spectra by an appropriate method (e.g., standard computer codes and hand calculations) for all appropriate contents. This includes all source terms that result in maximum radiation levels at different package surface and distance locations and for the different types of package contents for packages with multiple types of contents (e.g., SNF, NFH, greater-than-Class-C waste). Ensure that the application includes source-term

contributions from radioactive decay products if they result in higher radiation levels than the contents without decay, as described in Section 5.4.2.1 of this SRP chapter. In evaluating the contents' source terms, note that for MOX SNF, the gamma source can be significantly larger than for LEU SNF (see Appendix C to this SRP).

For gamma source terms that are calculated with computer codes, review the key parameters described in the application or listed in the input file. When neutron sources are present, verify that the production of secondary gamma (e.g., from (n,γ) reactions in shielding material) is either calculated as part of the shielding evaluation (see Section 5.4.4 below) or otherwise appropriately included in the source term. Confirm that the results of the source-term calculations are presented as a listing of gamma fluences or fluence rates, for example, gamma or million electric volts (MeV) per second, as a function of energy. The energy group structure of the source term (or terms) should be consistent with the group structure input requirements of the shielding analysis code. If the energy group structure from the source-term calculation differs from that of the cross-section set of the shielding calculation, the applicant may need to regroup the photons. Regrouping can be accomplished by using the nuclide activities from the source-term calculation as input to a simple decay computer code with a variable group structure. Some applicants will convert from one structure to another using simple interpolation. In general, only gammas with energies from approximately 0.4 to 3.0 MeV will contribute significantly to the radiation levels for typical types of package shielding; thus, regrouping outside this range is usually of lesser importance. However, look for cases when other gamma energies may also be significant to package radiation levels and ensure these gammas are also appropriately handled.

Ensure that the application provides activity (or mass) and total inventory of radionuclides that contribute significantly to the source term as supporting information. Also, determine whether the source terms are specified in terms of total package contents or other appropriate contents quantities (e.g., for SNF, in terms of per assembly, per total assemblies, or per MTU). Ensure that the application correctly uses the source-term information (e.g., the total source strength and spectra).

For SNF packages, be aware that determining the source terms for fuel-assembly hardware and NFH is generally not as straightforward as for the SNF. The source term is primarily from the cobalt contained in the hardware, particularly in the steel and Inconel components, though other activation products should be considered as well, as appropriate. For some NFH, activation of other components, such as hafnium in hafnium-absorber assemblies and the silver-indium-cadmium material in some control-rod assemblies, can also produce a significant gamma source. The strength and physical distribution of the hardware source term depends upon factors such as the mass of the materials, the level of cobalt impurity in the steel and Inconel components, and the axial region of the fuel assembly (i.e., top nozzle or upper end-fitting, upper plenum, fuel, lower plenum, bottom nozzle or lower end-fitting) and the associated neutron flux in which the materials are irradiated. Thus, verify that the application identifies the materials that comprise the assembly hardware and NFH to be stored with the assemblies.

Verify that the application describes the masses of the materials that are located within each assembly axial zone. Ensure that the application includes the masses of the assembly components for steel-clad assemblies or assemblies with steel guide and instrument tubes. For NFH, such as control-rod assemblies, ensure that the application describes the basis for the masses of the components listed for each axial region. The activation of these items is dependent upon the operation practices of the different reactors. Many may be operated with

these items positioned just above the fuel region or slightly inserted into the fuel region. Thus, only the lower ends of these items are irradiated, and the activation will be based on the appropriate flux factors for the axial regions in which the items were located. Ensure that the masses listed in each axial region are consistent with the extent of insertion into the assembly described in the application, which should be consistent with or reasonably bounding for operations practices for those items.

Ensure that the application identifies the cobalt impurity level used in the source-term calculation and describes the basis for that assumption. Various analyses have used impurity levels of about 800 to 1,000 parts per million (ppm), which is bounding for steel components of assemblies and NFH manufactured since the late 1980s. Data contained in PNL-6906, "Spent Fuel Assembly Hardware: Characterization and 10 CFR 61 Classification for Waste Disposal," issued June 1989, show that, for at least some assembly types fabricated before that time, cobalt levels may be as high as 1,500 ppm in Inconel and 2,100 ppm in steel. Thus, ensure that the application analysis uses cobalt impurity levels that are appropriate for the fuel assemblies and NFH to be transported in the package, given the age of the assemblies and NFH (based on their burnups and cooling times). If a lower cobalt impurity is assumed, ensure that appropriate references are provided.

The nature of the flux changes in magnitude and spectrum in regions outside of the fuel region. Thus, ensure that the application analysis adequately accounts for the impact of these changes on hardware irradiation in these other axial regions. This may be done by the use of scaling factors such as those described in NUREG/CR-6802, Section 3.3.2, "Hardware Regional Activation." Additionally, ensure that the hardware source term includes the contributions of materials such as hafnium and silver-indium-cadmium for those NFH items that include these materials. While the application may describe the source from cobalt in terms of curies, the source terms for these other materials likely will be described in terms of their energy spectrum.

The impacts on radiation levels from the activated assembly hardware and NFH can be significant. The effort devoted to reviewing this analysis should be based on the contribution of these source terms to the radiation levels presented in the shielding evaluation. Ensure that the source-term analysis addresses all appropriate NFH items that are included in the proposed package SNF contents, comparing the items identified in the source-term analysis with those items listed in the contents descriptions in the General Information and Shielding Evaluation sections of the application.

5.4.2.3 Neutron sources

Evaluate the method used to determine all neutron-source terms described in the application. Verify that the method considers, as appropriate, neutrons from spontaneous fissions and from (α,n) reactions. Verify that the contribution from both of these sources are separately identified, along with the actinides or light nuclei significant for these processes, as appropriate for the package contents. If the application assumes that either source-term contributions is negligible, confirm that the applicant provided an appropriate justification for their omissions. Verify that the production of neutrons from subcritical multiplication is either calculated as part of the shielding evaluation (see Section 5.4.4 below) or otherwise appropriately included and described in the basis of the source terms.

Confirm that the results of the source-term calculations are presented as a listing (or listings) of total neutron strengths and spectra (i.e., neutrons per second as a function of energy) for all appropriate contents. This includes all source terms that result in maximum radiation levels at different package surface and distance locations and for the different types of package contents

for packages with multiple types of contents (e.g., SNF, neutron-source assemblies (NSAs), other neutron-emitting radioactive materials). Also, determine whether the application specifies the source terms in terms of total package contents or other appropriate contents quantities (e.g., for SNF, in terms of per assembly, per total assemblies, or per MTU). Ensure that the source-term information (e.g., the total source strength and spectra) is correctly used in the Shielding Evaluation section of the application. The energy group structure of the source term(s) should be consistent with the group structure input requirements of the shielding analysis code.

For SNF packages, the SNF neutron source will generally result from both spontaneous fission and alpha-n reactions in the fuel. Depending on the method used to calculate these source terms, the applicant may need to define the energy group structure separately. This is often accomplished by selecting the nuclide with the largest contribution to spontaneous fission (e.g., curium-244) and using that spectrum for all neutrons, since the contribution from alpha-neutron reactions is generally small. For SNF with cooling times less than 5 years, confirm that the analysis addresses the spectra of curium-242 and californium-252.

The specification of a minimum initial enrichment is a necessary basis for defining the allowed SNF contents. Verify that the assumed minimum enrichments bound all assemblies the applicant proposes for transport in the package. Lower-enriched fuel, irradiated to the same burnup as higher-enriched fuel, produces a higher neutron source. Therefore, verify that the application specifies the minimum initial enrichment, and ensure the CoC contents limits include appropriate minimum enrichment limits.

Ensure that the applicant adequately described the neutron source, both source strength and spectrum, for NSAs included in the NFH to be transported with the SNF assemblies. NSAs are divided into two main categories: primary and secondary sources. Primary sources include polonium-beryllium (PoBe), americium-beryllium (AmBe), and other sources that generate neutrons though (α,n) reactions or spontaneous fission. Some of these sources have significantly long half-lives and can contribute a neutron source equivalent to the source of a SNF assembly. It is these sources that can contribute significantly to the neutron-source term in the package and so should be included in the shielding evaluation. Secondary sources include antimony-beryllium (SbBe) and other sources that generate neutrons through γ-n reactions. These sources typically have very short half-lives and need to be “charged” through neutron activation of the heavier element in the source material. Thus, secondary neutron sources usually contribute negligibly to the neutron-source term in the SNF package.

With regard to the contributions to the neutron source from subcritical multiplication in SNF packages, note that the results of depletion codes like SCALE’s TRITON and SAS2H or CASMO do not include this contribution. This source can often be addressed through the use of proper options in the input to the shielding code or use of appropriate factors by which the neutron source is increased when input into the shielding code. Ensure that the applicant justified the appropriateness of the selected method, including the input options and parameters in the shielding code (e.g., conservative assumptions of fissile content) or the factor (or factors) used to increase the source.

In reviewing the neutron-source specifications for MOX SNF, consider the information in Appendix C to this SRP, which indicates the neutron source may be more important relative to the gamma source for MOX SNF, with neutron emission rates significantly larger than for LEU SNF. Additionally, the (α,n) contribution is more significant and may dominate the spontaneous fission contribution to the neutron source. Therefore, the determination of the neutron-source

term and the source energy group structure should account for the contributions from both of these neutron sources. In reviewing MOX SNF, consider and account for the differences in the neutron energies, spectral distributions, and emission rates versus LEU SNF to ensure the applicant has properly calculated and described the MOX SNF neutron-source terms.

5.4.3 Shielding Model and Model Specifications

Coordinate with the structural, thermal, and materials reviewers to determine the effects the evaluations for normal conditions of transport and the tests for hypothetical accident conditions have on the packaging and its contents. For example, the package might have impact limiters or an external neutron shield that could be damaged or destroyed during the structural and thermal tests of 10 CFR 71.73. Also, the package may have a personnel barrier. This barrier may be present for normal conditions of transport but is not designed to survive the hypothetical accident conditions. Verify that the models and modelling assumptions used in the shielding calculations are consistent with the effects for the respective conditions.

5.4.3.1 Configuration of source and shielding

Examine the sketches or figures and sample input files, if provided, in the application to evaluate the applicant's shielding models. Verify that the dimensions and materials properties of the contents, radioactive sources in the contents, and the packaging components used in the shielding models are consistent with those specified in the package drawings and contents descriptions presented in the General Information section of the application.

Verify that the dimensions and material properties of the packaging components used in the models are those that maximize the package radiation levels. For example, the dimensions should be at the conservative end of their tolerance range, or they should be set such that the package shielding is minimized in a realistic manner. If the latter option is chosen, ensure that the applicant has adequately justified that the selected model dimensions result in the minimum shielding performance of the package. Ensure that voids, streaming paths, and irregular geometries are included in the model or otherwise treated conservatively in the model. These items include such things as any gaps between lids and flanges and between lead shielding and surrounding steel components that can exist based on packaging component dimensions, including tolerances, and locations of changes in package dimensions and shielding properties such as locations beyond the axial or radial extent of neutron- or gamma-shield components. Also ensure that the models include the effects of the normal conditions of transport evaluations and the hypothetical accident conditions tests for analyses versus the appropriate radiation level limits for these conditions. These effects may include loss of neutron shielding, lead slump, loss of impact limiters, crushing or deformation of packaging components, and puncture of packaging components for hypothetical accident conditions and the release or unscrewing of internal container lids for normal conditions of transport.

Verify that the dimensions and other properties of the package contents and sources used in the models are those that maximize the package radiation levels. If the package contents can be positioned at varying locations, have varying densities or compositions, or have varying source distributions, ensure that the locations, properties, and source distributions of the contents used in the evaluation are those that result in maximum expected external radiation levels. For example, the contents and source configuration that maximizes radiation levels on the side of the package might not be the same configuration that maximizes the radiation level on the top or bottom. Ensure that the application includes any changes in contents and source configurations (e.g., displacement or redistribution of the contents and sources, movement of contents and sources out of inner containers for containers when the lids release or unscrew, compaction of

contents and sources) resulting under normal conditions of transport and hypothetical accident conditions, as appropriate.

The requirements in 10 CFR 71.43(f) and 10 CFR 71.51(a)(1) state that package effectiveness should not be substantially reduced and external radiation levels should not be significantly increased for a package evaluated under the normal conditions of transport. In terms of the shielding evaluation, these requirements may be considered as met for shielding evaluations where the applicant includes the impacts of the normal conditions of transport evaluations in the models used to evaluate compliance with the 10 CFR 71.47 radiation-level limits. For exclusive-use shipments in which the analysis is based on the radiation levels stated in 10 CFR 71.47(b), confirm that the application includes the dimensions of the transport vehicle and the package location on the vehicle, as appropriate.

For commercial SNF packages, the verification of the package contents and sources described above includes verifying that the application properly models the contents, source-term locations, and the structural support regions of the fuel assemblies. Generally, the SNF contents model should include at least three source regions (the fuel region and top and bottom assembly hardware regions). Within the SNF region, the fuel materials may generally be assumed to be homogeneous in facilitating shielding calculations. In some cases, the presence of basket material may be homogenized as well. In either case, determine whether homogenization is not appropriate or improperly modeled, such as when it distorts the neutron multiplication rate or when radiation streaming can occur between basket components.

Because of uneven burnup profiles, a uniform source distribution is generally conservative for the top and bottom radiation level points. However, this may not be appropriate for the axial center unless the neutron and gamma source strengths are appropriately adjusted. Typically, fuel gamma source terms vary proportionally with axial burnup, and fuel neutron-source terms vary exponentially by a power of 4.12 with burnup (NUREG/CR-6802). These effects can be applied to the axial variation in burnup. If axial peaking appears to be significant, verify that the applicant's analysis has appropriately treated this phenomenon, including the effects on the gamma- and neutron-source terms. Ensure that the assembly structural support regions (e.g., top and bottom end hardware and plenum regions) are correctly positioned relative to the SNF. These regions may be individually homogenized.

If the proposed commercial SNF contents include damaged fuel, ensure that the contents models appropriately represent the possible configurations of the damaged fuel that maximize package radiation levels. Because damaged fuel may not retain the structural configuration of an assembly or may also be defined to include fuel debris, the models should include compaction of the damaged fuel contents and the associated source terms, identifying the amount of compaction of the source that maximizes package radiation levels. While compaction concentrates the source terms from the fuel, it also results in denser material, which in turn results in increased self-shielding by the contents. Thus, the bounding degree of compaction may not be the full amount of compaction that is physically possible. Also, ensure the models include fuel material in assembly regions that for undamaged assemblies normally only contain assembly hardware material since, with damaged fuel and fuel debris, fuel material can move into these areas. Additionally, ensure that the models include movement of the damaged fuel contents consistent with what the package would allow (e.g., within a damaged fuel can, if used) to maximize the package radiation levels for the different package surface locations. For example, the models should place the compacted source and contents (i) as close as possible to the base of the package to maximize radiation levels at the package base; (ii) at the package side surfaces below the axial extent of any gamma or neutron shielding on the side of the

package; and (iii) as close as possible to the top of the package to maximize the radiation levels at the respective bottom, side, and top areas of the package, including areas where packaging shielding varies along those package surfaces.

For commercial SNF packages that include high-burnup fuel contents (i.e., SNF with burnup exceeding 45 GWd/MTU), work with the materials, structural, and thermal reviewers to understand the approach taken for addressing these contents and to understand the implications for the fuel's behavior under normal conditions of transport and hypothetical accident conditions. Based on this coordination, identify and ensure the applicant's models address the impacts of these conditions on the high-burnup fuel's configuration. The shielding analysis should address credible and bounding reconfigurations of the fuel. Depending upon the applicant's approach and the outcomes of the materials, structural, and thermal reviews, analysis with fuel reconfiguration may be necessary to support the certification basis (also referred to as the licensing basis) for the package or may be needed as a defense-in-depth measure. Ensure that the application and the results of the review clearly indicate the purpose of the reconfiguration analysis (either as part of the certification basis or as defense-in-depth). Since the staff's understanding and knowledge regarding the behavior of high-burnup fuel continues to evolve, work with the other reviewers, particularly the materials reviewer, to understand the latest guidance that applies to evaluations of high-burnup fuel.

For research SNF, apply the preceding guidance as applicable and appropriate to ensure the applicant's analyses adequately consider the possible configurations of the research SNF and its associated source terms within the package.

5.4.3.2 Material properties

Verify that the applicant described and used appropriate material properties (e.g., composition, mass densities, and atom densities) in the shielding models for all packaging components, package contents, and the conveyance (if applicable). For nonstandard materials or other uncommon materials such as polymer-based neutron shields, foams, plastics, and other hydrocarbons, ensure that the applicant provided relevant references documenting the materials' properties. Ensure that the shielding model uses the material properties that minimize the shielding effectiveness of these materials (e.g., minimum density, minimum hydrogen content, minimum boron-10 content).

Most computer programs used for shielding calculations allow the analyst to specify either mass densities in grams-per-cubic-centimeter or atom densities in atoms-per-barn-centimeter. Consider whether either mass density or atom densities alone is sufficient for certain types of materials. Note that the use of atom densities can be subject to errors. Therefore, if used, confirm that the applicant calculated correct atom densities and correctly input these densities into the analysis models.

Work with the materials and the acceptance tests and maintenance program reviewers to ensure that the composition and fabrication of the nonstandard and uncommon materials are properly controlled in achieving the specified properties that are relied on for shielding (e.g., compositions, densities, dimensional properties). Such controls may also be needed for shielding materials such as poured lead shields. This also includes appropriate controls and tests for neutron absorbers that are also relied upon in the shielding evaluation. In this context, verify that specific information on control measures and appropriate shielding effectiveness tests is included in the Acceptance Tests and Maintenance Program section of the application (see Sections 5.4.1.1, 7.4.6, and 9.4.1.7 of this SRP). For cases where neutron absorbers are credited, also work with the criticality reviewer to ensure that the application includes appropriate

qualification and testing of the absorbers. Also work with these reviewers to assess if any shielding properties could degrade during the service life of the packaging and to confirm that adequate controls and tests are in place to ensure the long-term effectiveness of such shielding materials (see Sections 7.4.6 and 9.4.2 of this SRP).

Work with the materials and thermal reviewers to ensure that the application describes the effects of temperature and radiation on packaging materials. Work with the materials and thermal reviewers to understand the effects of the normal conditions of transport evaluations and hypothetical accident conditions tests on the properties of the package components and contents material, including changes in composition and density. For example, elevated temperatures may reduce hydrogen content through loss of bound or free water in hydrogenous shielding materials or degradation of polymer materials. Ensure that materials properties in the shielding models appropriately or conservatively include these effects (i.e., the effects of temperature, radiation, and the different conditions' evaluations and tests). Certain effects are not acceptable. For example, temperature-sensitive materials credited in the shielding evaluation should not be subject to temperatures at or above their design limitations during normal or accident conditions. Melting of lead shielding is also not acceptable. Also, these materials' properties should not degrade during the package's service life (e.g., degradation of foam, dehydration of hydrogenous materials, cracking of the neutron shield).

Typically, nonstandard or uncommon materials such as polymer-based neutron shields are neglected in the models for hypothetical accident conditions. This is because of the effects of tests such as the puncture test and thermal test. However, if the applicant's analysis takes some credit for these materials in these models, ensure the credit bounds or is conservative for the impacts of the tests for these conditions. This includes ensuring that the applicant has provided information that describes the impacts of the tests for these conditions on the materials' properties and working with the materials and thermal reviewers to confirm the validity and applicability of the information to describe the materials' properties under these conditions.

If the shielding model considers a homogenous source region rather than a detailed heterogeneous model of the contents (e.g., homogeneous fuel region for SNF versus explicit model of fuel rods with pellets and cladding), confirm that such an approach is justified, and verify that the homogenized mass densities are correct for normal conditions of transport and hypothetical accident conditions. Because an accurate, effective density of homogenized source terms is important in characterizing self-shielding, perform a confirmatory calculation of this homogenized density.

5.4.4 Shielding Evaluation

5.4.4.1 Methods

Ensure that the methods used for the shielding evaluation are appropriate for evaluating the radiation levels of the package. The methods should be adequate to effectively represent and evaluate the material properties, geometries and configurations of the packaging components and package contents, and the contents' radiation source-term properties (e.g., radiation types, energies, spectra, and secondary sources such as from (n,γ) reactions in the packaging materials). Verify that the methods are also adequate to effectively represent and evaluate the effects of the normal conditions of transport evaluations and the hypothetical accident conditions tests. Generally, more complex methods are necessary to adequately evaluate packages with more complex component and contents geometries and materials properties and more complex sources. However, simpler methods may also be acceptable for a complex package if the applicant used the methods in a manner that is bounding for the package.

Evaluation methods may not always involve computer codes. Depending upon the package, simple hand calculations may be sufficient. Additionally, in lieu of an analytical calculation, the package evaluation may involve radiation measurements on a prototype package, with a description of the measurement method and the results provided in the application's Shielding Evaluation section of the application. RIS 2013-04 also includes information that may be useful to consider in evaluating the applicant's shielding evaluation method.

If the applicant chooses to evaluate the package using radiation measurements, ensure the application includes an adequate description of the measurement methods and provides adequate details of the results to demonstrate compliance with the limits in 10 CFR 71.47 and 10 CFR 71.51(a). Verify that the information in the application is sufficient to demonstrate that the applicant has used measurement equipment and techniques that are appropriate for the types of radiation and the radiation energy and spectrum of the package contents and that the equipment produces reliable results (e.g., the detector calibration is valid). Depending on the technique and equipment and the strength of the source used in the measurements, correction factors may also be necessary to adjust the results of the measurements to ensure they demonstrate compliance with the limits for the proposed contents limits. These correction factors may include geometric adjustments to ensure that the result is for the package surface as well as scaling factors for use of sources with source strengths that are less than the proposed package limits. The International Atomic Energy Agency's Safety Guide TS-G-1.1, "Advisory Material for the IAEA Regulations for the Safe Transport of Radioactive Material," paragraph 233.5 and Table 1, and NUREG/CR-5569, "Health Physics Positions Data Base," HPPOS-013, "Averaging of Radiation Levels Over the Detector Probe Area," issued February 1994, contain useful information regarding detector size and measurement correction factors and averaging of radiation levels over the detector probe area. Ensure that the applicant's evaluation includes measurements for comparison against the regulatory limits that are for prototype packages that are in the as-fabricated condition and for prototype packages that have been evaluated and tested for the appropriate conditions (i.e., normal conditions of transport and hypothetical accident conditions). Ensure that the description of the analysis demonstrates that the measurement results are the maximum radiation levels at any point on the package surface and at the regulatory distances from the package.

If the applicant evaluated the package using hand calculations, ensure that the application includes adequate information to describe the calculation method and the results. The information should be adequate to demonstrate that the applicant correctly identified the locations and configurations of the package for which package radiation levels are maximized. Ensure the description also describes the data and the sources of the data used in the analysis, including source spectra, source emission rates, attenuation properties of the source materials and packaging components credited in the analysis, buildup factors for those materials, and production of secondary radiation in the packaging materials (if applicable). Confirm that the data come from validated sources and that the applicant has used appropriate data in the analysis. For analyses with multiple shielding materials, confirm that the applicant has appropriately or conservatively accounted for the buildup and attenuation of radiation through multiple materials.

A variety of computer codes are available that have been and may be used for shielding analyses. The codes may use Monte Carlo transport, deterministic transport, or point-kernel techniques for problem solutions. The point-kernel technique is generally appropriate only for gammas since transportation packagings typically do not contain sufficient hydrogenous material to apply removal cross sections for point-kernel neutron calculations. Shielding codes that have typically been used or may be used in package analyses include MicroShield, SCALE

(e.g., SAS4, MONACO/MAVRIC), MCBEND, and MCNP. MicroShield is a one-dimensional point-kernel code that applicants have used for source packages and other similar packages. The remaining codes have been and can be used for more complex package designs, as well as simple package designs.

For a shielding analysis that uses computer programs or codes, ensure that the application identifies the codes used, including the versions, and provides a brief description of the code to justify that it is appropriate for analyzing the package radiation levels. For older code versions, additional justification may be necessary, particularly if the applicant's use of the older code version extends beyond the ranges of parameters for which that version of the code was validated or that version of the code the developer no longer supports. If the applicant used proprietary computer codes or those not well established (e.g., the codes are not widely used or recognized codes), ensure that the applicant has included a detailed description of the code, including the methods the code uses and the limitations and capabilities of the code.

Ensure that the applicant has demonstrated that the computer codes and versions used in the analysis are adequate for the analysis and valid for the particular computational platform used to perform the analysis through benchmarking and validation of the versions of the codes used. The applicant should provide appropriate references for the code as well as benchmark and validation data for the code. For a well-established code, such as MCNP and SCALE, applicant may instead specify widely available references or references that have been previously submitted to the NRC for the same code and code version. Otherwise, check that the application includes test problem solutions that demonstrate substantial similarity to solutions from other sources and benchmark that code's capability to perform calculations for the proposed package.

Verify that the applicant used a code appropriate for the package design. Packages with complex geometries and configurations, such as streaming paths and irregular or nonsymmetric geometries, generally require a code with a two-dimensional or three-dimensional calculation capability. One-dimensional codes provide little information about off-axis locations and streaming paths. Even for radiation levels at the end of the package, one-dimensional codes require a buckling correction that must be justified since merely using the packaging cavity diameter may underestimate actual radiation exposure rates (i.e., overestimate the radial leakage). Even a two-dimensional calculation may not be adequate for determining any streaming paths if the modeled configuration is not properly established.

Confirm that the code's cross-section library is applicable for shielding calculations. Confirm that a coupled cross-section set is used and that the code has been executed in a manner that accounts for secondary sources (e.g., subcritical multiplication, secondary gamma production), unless the evaluation has independently determined source terms for these secondary sources (e.g., in the source-term calculations described in Section 5.4.2 above). Confirm that radionuclide libraries, decay schemes, neutron and gamma yields, and spectra are valid and appropriate and are documented in the application, as applicable for the analysis method and computer code.

Additionally, particularly for commercial SNF packages, applicants often use transport or point-kernel methods to calculate neutron and gamma response functions [unit of (mrem/hr)/(source particle/s/cm^2)]. This technique, also known as the response function method, enables an applicant to quickly determine radiation levels for different source terms by multiplying the source terms by the response functions instead of running a separate transport calculation for each source term. It is based on the premise that, all else being equal

(e.g., source particle type, energy, origin; detector location; material and geometric properties of the system), an increase in the source strength results in a corresponding increase in package radiation levels. For analyses that employ this response function technique, verify the following:

- The applicant calculated a response function for each particle type and for each energy bin in the particle type's energy spectrum.
- The response functions are used only for the shielding and source configuration (geometric and material properties) for which the response functions were calculated.
- The source properties (material and geometric) are appropriate or conservative for the contents for which the functions were calculated.
- The response functions are used only for the detector location for which the functions were calculated.
- The calculations for determining the response functions are well converged and appropriately account for any errors and uncertainties resulting from calculation or use of the response functions.

Thus, multiple sets of response functions may be needed to support the shielding analysis. This includes separate sets of response functions for differences in shielding properties (material or geometric), for differences in source properties (material or geometric), and for different detector locations. Ensure that the applicant has determined a sufficient number of sets of response functions to analyze and determine the maximum radiation levels at the package surfaces and the distances from the package specified in the regulations.

5.4.4.2 Code input and output data

Verify that the application identifies key input data for the shielding evaluations that use computer codes. The key input data will depend on the type of code (e.g., point-kernel, deterministic, or Monte Carlo) as well as the code itself. In addition to data describing the source terms and the materials and dimensions of the package contents and the packaging components identified above, key input data may also include data such as convergence criteria, mesh size, neutrons per generation, number of generations, and conversion factors to convert radiation fluence rates to radiation levels. Note that codes such as MicroShield may have input data limitations with regard to materials specifications and handling buildup across multiple materials. Thus, confirm that the applicant selected input parameters in a way that is conservative for these aspects of the package.

Ensure that the application includes a set of representative output files (or key sections of specific files, including input data) for each type of calculation performed in the shielding analyses. Ensure that proper convergence is achieved and that the calculated radiation levels from the output files agree with those reported in the text and tabulations and demonstrate compliance with 10 CFR Part 71 radiation limits.

For the other, noncomputer code evaluation methods, ensure that the application identifies the data and parameters for those methods and the results of those evaluations as discussed in the method description in Section 5.4.4.1 above.

5.4.4.3 Fluence-rate-to-radiation-level conversion factors

Ensure that the evaluation properly converts gamma and neutron fluence rates, as applicable to the package, to radiation levels. Verify the accuracy of the conversion factors, which should be tabulated as a function of the energy group structure used in shielding calculations. Ensure that the application includes supporting information and documentation for these tabulations.

While a variety of conversion factors are available for use in shielding analyses, the NRC only accepts the use of the American National Standards Institute/American Nuclear Society (ANSI/ANS) 6.1.1-1977, "Neutron and Gamma-Ray Flux-to-Dose-Rate Factors," conversion factors. The basis for this acceptance is explained below. Thus, unless adequately justified, confirm that the applicant used these conversion factors in its analysis. The justification should include close correspondence with the accepted conversion factors and appropriateness for the application (e.g., conversion factors are based on the same methodology as is incorporated into the limit, or usefulness for demonstration of compliance by measurement).

The radiation level limits in 10 CFR Part 71 are in terms of dose equivalent and apply to the package surfaces and specific distances from those surfaces and not to doses to individuals. Furthermore, the package user demonstrates compliance with these limits at the time of shipment [to meet 10 CFR 71.87(j)] by measurement. The conversion factors in ANSI/ANS 6.1.1-1977 are appropriate because they convert the fluence rate to radiation levels that are in terms of dose equivalent.

Conversion factors, such as those in the 1991 version of ANSI/ANS 6.1.1 are based on significantly different models and result in radiation levels that are in terms of effective dose equivalent. This quantity (effective dose equivalent) and the model are based on impact to organs in the body, as can be seen in the definitions available for this quantity (e.g., see 10 CFR 20.1003, "Definitions"). In addition to being a different quantity than specified in the regulations, effective dose equivalent is not a measurable quantity and is specific to doses to individuals. Thus, use of conversion factors that yield results in terms of effective dose equivalent is not appropriate to demonstrate compliance with the 10 CFR Part 71 radiation limits.

Other problems arise with other conversion factors such as the ANSI/ANS 6.1.1-1991 standard's factors. While direct comparison is not appropriate because the quantities are different, the radiation levels calculated with conversion factors like those in ANSI/ANS 6.1.1-1991 underestimate radiation levels versus those calculated with factors such as those in ANSI/ANS 6.1.1-1977. This is a result of the shielding provided by other body tissues between the source and the target organs in the models that are the basis of the 1991 version factors. In addition, ICRP Publication 45 (1985) recommends that the quality factors for neutrons be scaled up uniformly by a factor of two, which counteracts the neutron dose rate reduction effected by the body shielding the target organs. However, nothing has been done to address the neutron quality factors; thus, use of the conversion factors from the 1991 version of the standard significantly under-predicts neutron radiation levels. While the 1991 version of the standard has been withdrawn (as well as the 1977 version), given the preceding considerations, the NRC accepts the use of the 1977 version of the standard.

Note that some versions of some codes, such as MicroShield, use conversion factors that are more like the ANSI/ANS 6.1.1-1991 standard factors and may not have an option for using the accepted factors. As described above, this will result in underestimates of package radiation levels. Verify that the application addresses this. One approach to address this is for the applicant to calculate appropriate adjustment factors and apply these factors to the radiation level results from the code. For codes that also show the fluence rates at the detector locations,

another option is for the applicant to use the fluence-rate results and manually perform the conversion to radiation levels using the ANSI/ANS 6.1.1-1977 conversion factors.

5.4.4.4 External radiation levels

Confirm that the external radiation levels under normal conditions of transport and hypothetical accident conditions agree with the summary tables in the application and the discussion in Section 5.4.1.2 of this SRP chapter. Confirm that the radiation levels meet the limits of 10 CFR 71.47(a) or 10 CFR 71.47(b), as appropriate, and 10 CFR 71.51(a)(2). Verify that all radiation level point locations shown in the shielding analyses include all locations prescribed in 10 CFR 71.47(a) or 71.47(b) and in 71.51 (a)(2).

Verify that the analyses, whether calculations or measurements on a package prototype, demonstrate that the applicant has selected the locations of maximum expected package radiation levels. Note that maximum levels might not occur at the midpoint of a package surface or parallel plane. Radiation peaking often occurs near the axial or radial edges of package neutron- and gamma-shielding components and impact limiters and at or near locations of voids and other streaming paths and other irregular package component geometries. Therefore, ensure that the analyses in the application appropriately considered and evaluated these aspects of the package in identifying locations of maximum radiation levels. Ensure that the external radiation levels are reasonable and that their variations with locations over external surfaces of the package are consistent with the geometry and shielding characteristics of the package and the locations of the source terms of the contents that are used in the different calculations. Also, verify that the analyses appropriately consider the conservatism of simplifying assumptions and support assertions that nonconservative assumptions are more than compensated for by conservative assumptions.

In evaluating package surface radiation levels, ensure the applicant correctly identified the package surfaces and analyzed the radiation levels for the package surfaces and at the correct distances from the package surfaces. This is fairly straightforward for packages that have uniform, simple surfaces. In the case of packages with complex configurations or geometries, the package surface can vary significantly.

Figure 5-3 illustrates what constitutes the package surface and the appropriate radiation level limits for package surfaces for packages with nonuniform, complex surfaces. The images in the figure are a cutaway view (quarter symmetry) of the packages and only show the outer edge of the package surface (i.e., no detail is provided to distinguish different components such as neutron shielding, impact limiters, or the outer shell of the package). The top image in the figure is for an exclusive-use shipment that uses a personnel barrier that extends only between the impact limiters on the package. As can be seen in Figure 5-3, a package may have features that do not extend over the entire surface, so the surface location changes. Or, in the case of closely spaced fins, where the spacing makes it impractical to see or access the package's true surface between the fins, the package surface for radiation limit compliance purposes may be

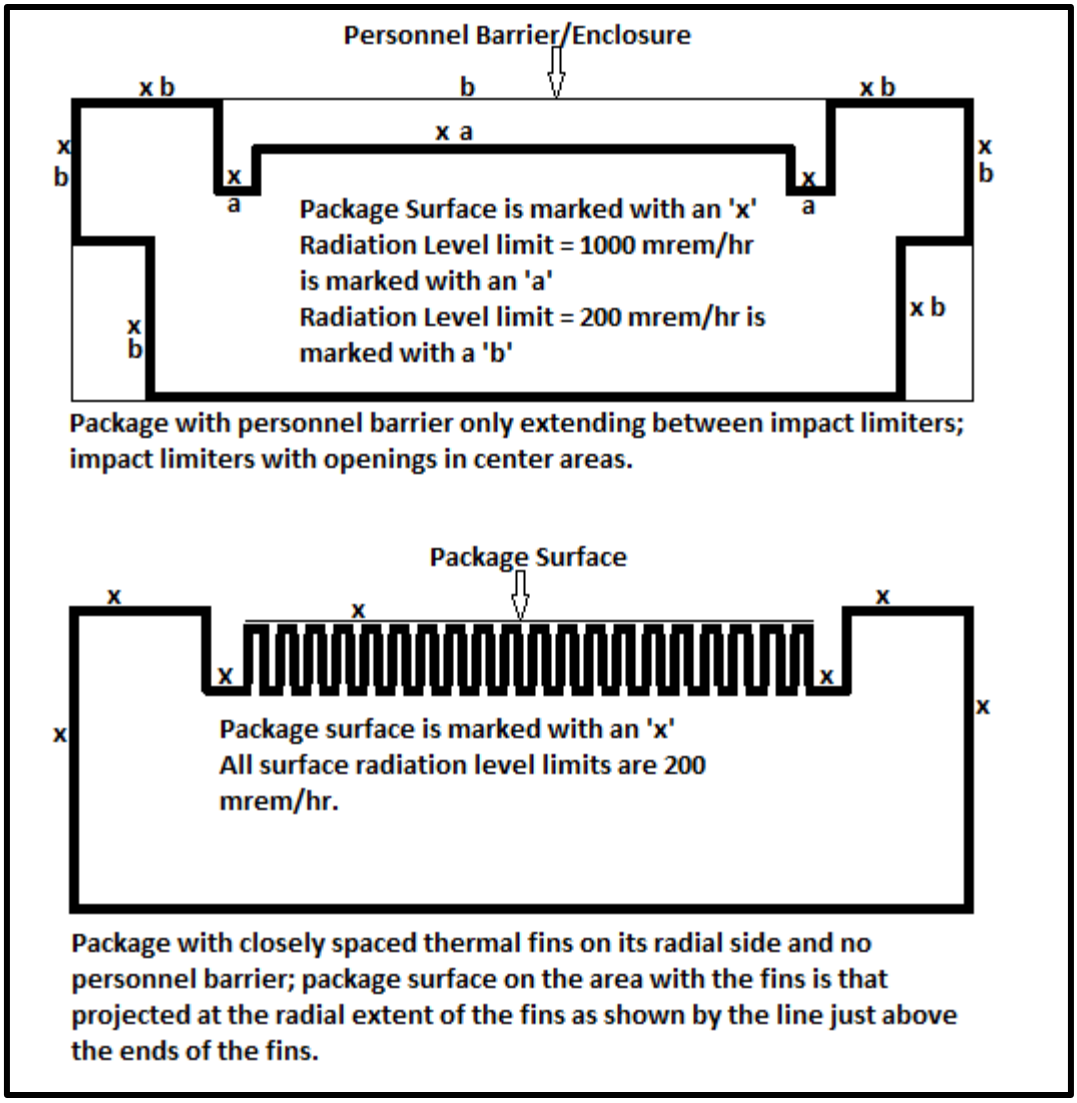

Figure 5-3 Cutaway images depicting package surfaces and radiation-level limits for packages with complex surfaces

the plane projected by the outer edges of the fins. As can also be seen in the figure, in instances where a package may have a personnel barrier that only extends over portions of the package surface (e.g., between the impact limiters on the package's radial side), the higher surface radiation limit for packages in exclusive-use shipments only applies to the package surfaces covered by the personnel barrier. The basic rule is that the 2-mSv/hr (200-mrem/hr) limit applies to any exposed, or accessible, package surfaces. For purposes of 10 CFR 71.47(b), only those parts of the package shown in the drawings and that have been demonstrated to remain in place under the normal conditions of transport evaluations (in 10 CFR 71.71) may be considered to be the external surface of the package.

Confirm that the application addresses damage to the shielding under normal conditions of transport and hypothetical accident conditions. Verify that any damage under normal conditions of transport (under 10 CFR 71.71) does not result in a significant increase in external radiation levels, as required by 10 CFR 71.43(f) and 10 CFR 71.51(a)(1). Ensure that the application includes an explanation of any increase and a justification as to why the increase is not significant. As stated earlier in this SRP chapter, the NRC has often accepted analyses of

packages modeled with damage from the 10 CFR 71.71 evaluations that show compliance with the 10 CFR 71.47 limits as adequate demonstrations of compliance with 10 CFR 71.43(f) and 10 CFR 71.51(a)(1), as well. With regard to hypothetical accident conditions, note that some shielding components, such as external neutron shielding, may not be designed to remain in place or may sustain significant enough damage so that they cannot be credited or relied on under these conditions. Also, personnel barriers and enclosures cannot be credited for hypothetical accident conditions, as these also are not designed to survive these conditions, and the limits are for radiation levels at 1 meter [40 inches] from the package's surfaces.

Confirm that the applicant's evaluation provides radiation levels for the contents and source terms that result in maximum radiation levels for the different package surfaces. As described previously, the same contents and source terms may not be bounding for all package surfaces or for all conditions. The shielding characteristics at different locations on the package and the impacts of the evaluation and test conditions will influence what source terms are bounding at which package surface locations and under which conditions. For example, SNF contents with a more dominant neutron-source term may be bounding for package surfaces located away from the package's neutron shielding or in hypothetical accident conditions when the neutron shielding is lost, but SNF contents with a more dominant gamma source term may be bounding otherwise.

Confirm that the applicant's evaluation addresses potential shifting of the package contents and redistribution of the source terms that are possible based on the package design, conditions incident to transport, and the impacts of the normal conditions of transport evaluations and the hypothetical accident conditions tests. The contents and source terms should be shifted so as to maximize the radiation levels associated with the package as designed and for the types of damage sustained from the different condition evaluations and tests. This also includes any kind of credible and bounding reconfigurations of the contents such as for loose particulates or debris. Similarly, ensure that the applicant's evaluation addresses this for any high-burnup fuel in a SNF package, consistent with the applicant's approach to high-burnup fuel as modified by the materials, structural, and thermal reviews.

In determining maximum external radiation levels, radiation levels may be averaged over the cross-sectional area of a radiation probe, with an appropriate size for such types of measurements (see HPPOS-013 in NUREG/CR-5569). For the applicant's analysis of package radiation levels, ensure the tally or detector sizes are appropriate for the contents configurations allowed in the package and the axial or radial variation of the package features relevant to shielding performance. For example, for package features such as streaming paths or voids or localized damage from the normal conditions of transport evaluations or the hypothetical accident conditions tests, ensure that the applicant selected tally or detector sizes such that radiation levels associated with such features or damage are not averaged with radiation levels for package areas around the features or damage. Also, ensure the applicant did not otherwise apply averaging to reduce the radiation levels attributed to such features or damage.

Also, if transport is by exclusive use (as is typical for commercial SNF), the application may also include an evaluation for radiation levels in normally occupied vehicle locations to address 10 CFR 71.47(b)(4). As required in that paragraph, the radiation level limit for these locations is 2 mrem/hr unless the vehicle occupants wear dosimetry devices under a radiation protection program in conformance with 10 CFR 20.1502. If included, ensure this evaluation and the results are consistent with the analysis and results for the analyses against the other limits in 10 CFR 71.47(b). Note, however, that determination of the need for dosimetry for these locations is determined at the time of shipment and not by analyses in the application.

Though not an external radiation-level issue, some packaging components may be sensitive to radiation exposure or have thresholds of exposure to gamma or neutron radiation above which the components' material properties and performance degrades (e.g., polymer-based containment seals). Therefore, coordinate with the materials reviewer to determine the need to evaluate the applicant's calculation of the gamma radiation levels and neutron fluences the packaging components will experience. This evaluation involves determination of an appropriate time over which the exposure accumulates. The results of this evaluation may play an important role in determining the frequency with which such components are repaired or replaced as part of the maintenance programs described in the application and incorporated into the CoC by reference. Verify that the application adequately describes the calculation method and that the method is appropriate for and correctly used to determine the gamma and neutron exposures for the packaging components. Ensure that the analysis also appropriately identifies and accounts for uncertainties in the analysis, as appropriate.

5.4.4.5 Confirmatory analyses

Perform confirmatory analyses, as appropriate, of the shielding calculations reported in the application, to the extent necessary. A number of factors should be considered in determining the level of effort for such confirmatory analyses. These factors include the expected magnitude of radiation levels, the margins between the analyzed radiation levels and the regulatory limits, similarity with previously reviewed packages, thoroughness of the review of source terms and other input data, radiation contributions from difficult-to-measure neutrons, the complexity of the package design, the complexity and variety of the proposed package contents, the degree of sophistication of the applicant's analysis methods, the limitations of these methods and their potential impacts on results, the degree of conservatism in the applicant's analyses, the applicant's experience with these methods (as demonstrated in previous submittals), and the assumptions used in the analyses.

At a minimum, examine the applicant's input to the computer program used for the shielding analysis. For noncomputer code methods, examine the data the applicant used in that analysis and ensure the applicant's use and manipulations of that data are appropriate and correct. Verify the use of proper package dimensions, material properties and composition, contents and source specifications and distributions, cross-section sets (including couple cross-section sets where necessary), attenuation and buildup factors, parameters or other options to address subcritical neutron multiplication, and correct factors to convert fluence rates to radiation levels, as applicable to the package, its contents, and the analysis methods. Also, independently evaluate the use of the gamma- and neutron-source terms, as applicable to the package contents and the analysis methods.

If a more detailed evaluation is deemed necessary, independently evaluate projected radiation levels to ensure that the application results are reasonable and conservatively bounding. As previously noted, the use of a simple code for neutron calculations is often not appropriate. An extensive evaluation would be necessary if significant errors or large uncertainties are suspected or noted in the review. If feasible, use a different shielding code or other appropriate analysis method with different analytical techniques and cross-section set (or other necessary data, as applicable to the analysis method) from that of the application to conduct an independent evaluation and confirm the application results.

Coordinate with the thermal and containment reviewers to determine the need to independently confirm the estimated source terms (i.e., decay heat and radionuclide quantities) and their uncertainties for these reviews. The items can be calculated with the codes used to calculate

radiation source terms or other appropriate methods. For calculations using computer codes, refer to the literature regarding these codes for information about the calculation uncertainties. For example, for SCALE, this information is included in various NRC-sponsored studies (e.g., ORNL/TM-13315; ORNL/TM-13317; and NUREG/CR-5625, "Technical Support for a Proposed Decay Heat Guide Using SAS2H/ORIGEN-S Data," issued July 1994). Also, coordinate with the materials reviewer to determine the need to independently confirm the estimated gamma radiation levels and neutron fluences for the packaging components, particularly those that are sensitive to radiation or have threshold levels above which the components may degrade from the radiation exposure.

5.4.5 Appendix

The applicant may provide some of the information described in the preceding sections in one or more appendices to the shielding section of the application (as opposed to the main body of that section). In such a case, confirm that the relevant appendices present all supporting information necessary to confirm that the package meets the radiation requirements in 10 CFR Part 71. This information includes, but is not limited to, a list of references, copies of applicable references that are not generally available, specifications and performance data for nonstandard packaging materials (e.g., polymer-based neutron shields), descriptions of source terms, radionuclide inventories, neutron and gamma energy spectra, descriptions of analytical methods (e.g., computer codes) or measurement methods, input and output files, results of test and sensitivity analyses, analytical method benchmarking and validation information, and other appropriate supplemental information.

5.5 Evaluation Findings

Prepare evaluation findings upon satisfaction of the regulatory requirements in Section 5.3 of this SRP chapter. If the documentation submitted with the application fully supports positive findings for each of the regulatory requirements, the statements of findings should be similar to the following:

F5-1 The staff has reviewed the application and finds that it adequately describes the package contents and the package design features that affect shielding in compliance with 10 CFR 71.31(a)(1), 71.33(a), and 71.33(b), and provides an evaluation of the package's shielding performance in compliance with 10 CFR 71.31(a)(2), 71.31(b), 71.35(a), and 71.41(a). The descriptions of the packaging and the contents are adequate to allow for evaluation of the package's shielding performance. The evaluation is appropriate and bounding for the packaging and the package contents as described in the application.

F5-2 The staff has reviewed the application and finds that it demonstrates the package has been designed so that under the evaluations specified in 10 CFR 71.71 (normal conditions of transport), and in compliance with 10 CFR 71.43(f) and 10 CFR 71.51(a)(1), the external radiation levels do not significantly increase.

F5-3 The staff has reviewed the application and finds that it demonstrates that under the evaluations specified in 10 CFR 71.71 (normal conditions of transport), external radiation levels do not exceed the limits in 10 CFR 71.47(a) for nonexclusive-use shipments or 10 CFR 71.47(b) for exclusive-use shipments, as applicable.

F5-4 The staff has reviewed the application and finds that it demonstrates that under the tests specified in 10 CFR 71.73 (hypothetical accident conditions), external radiation levels do not exceed the limits in 10 CFR 71.51(a)(2).

F5-5 The staff has reviewed the application and finds that it identifies codes and standards used in the package's shielding design and in the shielding analyses, in compliance with 10 CFR 71.31(c).

F5-6 The staff has reviewed the application and finds that it includes operations descriptions, acceptance tests, and maintenance programs that will ensure that the package is fabricated, operated, and maintained in a manner consistent with the applicable shielding requirements of 10 CFR Part 71.

F5-7 [For packages intended to ship plutonium by air] The staff has reviewed the application and finds that it demonstrates that under the tests specified in 10 CFR 71.74 (accident conditions for air transport of plutonium) and 10 CFR 71.64(b)(2), the external radiation levels do not exceed the limits in 10 CFR 71.64(a)(1)(ii).

The reviewer should also provide a summary statement similar to the following:

> Based on its review of the information and representations provided in the application and the staff's independent, confirmatory calculations, the staff has reasonable assurance that the proposed package design and contents satisfy the shielding requirements and the radiation level limits in 10 CFR Part 71. The staff also considered the regulation itself, appropriate regulatory guides, applicable codes and standards, and accepted engineering practices, in reaching this finding.

5.6 References

10 CFR Part 71, "Packaging and Transportation of Radioactive Material."

49 CFR Part 173, "Subpart I—Class 7 (Radioactive) Materials."

Ade, B.J. "SCALE/TRITON Primer: A Primer for Light Water Reactor Lattice Physics Calculations" (NUREG/CR-7041, ORNL/TM-2011/21), Oak Ridge National Laboratory, Oak Ridge, TN, November 2012.

American National Standards Institute/American Nuclear Society, "Neutron and Gamma-Ray Flux-to-Dose-Rate Factors," ANSI/ANS 6.1.1-1977, American Nuclear Society, LaGrange Park, IL.

ANSI/ANS 6.1.1, "Neutron and Gamma-Ray Fluence-to-Dose Factors," 1991.

Bowman, S.M. and I.C. Gauld, "ORIGEN-ARP Primer: How to Perform Isotopic Depletion and Decay Calculations with SCALE/ORIGEN," ORNL/TM-2010/43, Oak Ridge National Laboratory, Oak Ridge, TN, April 2010.

Cember, Ph.D., Herman, "Introduction to Health Physics," 3rd Edition, Published by McGraw-Hill (Health Professional Division), New York, NY, pp. 129-131, 1996.

DeHart, M.D. and O.W. Hermann, "An Extension of the Validation of SCALE (SAS2H) Isotopic Predictions for PWR Spent Fuel," ORNL/TM-13317, Oak Ridge National Laboratory, September 1996.

Hermann, O.W. and M.D. DeHart, "Validation of SCALE (SAS2H) Isotopic Predictions for BWR Spent Fuel," ORNL/TM-13315, Oak Ridge National Laboratory, September 1998.

ICRP Publication 38, “Radionuclide Transformations—Energy and Intensity of Emissions,” *Annals of ICRP*, Vol. 11-13, 1983.

ICRP Publication 45, “Quantitative Bases for Developing a Unified Index of Harm,” *Annals of the ICRP*, Vol. 15, Issue 3, 1985.

ICRP Publication 107, “Nuclear Decay Data for Dosimetric Calculations,” *Annals of ICRP*, Vol. 38, Issue 3, 2008.

International Atomic Energy Agency, “Advisory Material for the IAEA Regulations for the Safe Transport of Radioactive Material,” Safety Guide No. TS-G-1.1 (Rev. 1), August 2008 (STI/PUB/1325), Vienna.

Luksic, A., “Spent Fuel Assembly Hardware Characterization and 10 CFR 61 Classification for Waste Disposal,” PNL-6906, Volume 1, Pacific Northwest Laboratory, Richland, WA, June 1989.

MCNP5, “MCNP – A General Monte Carlo N-Particle Transport Code, Version 5; Volume II: User’s Guide,” LA-CP-03-0245, Los Alamos National Laboratory, April 2003.

NRC Information Notice 83-10, “Clarification of Several Aspects Relating to Use of NRC-Certified Transport Packages.” March 11, 1983.

NRC Regulatory Issue Summary 2013-04, “Content Specification and Shielding Evaluations for Type B Transportation Packages,” April 23, 2013, Agencywide Documents Access and Management System (ADAMS) Accession No. ML13036A135.

NUREG-1608, “Categorizing and Transporting Low Specific Activity Materials and Surface Contaminated Objects,” U.S. Nuclear Regulatory Commission (also RAMREG-003, U.S. Department of Transportation), July 1998, ADAMS Accession No. ML15336A927.

NUREG/CR-3854, U.S. Nuclear Regulatory Commission, “Fabrication Criteria for Shipping Containers,” UCRL-53544, Lawrence Livermore National Laboratory, Livermore, CA, March 1985.

NUREG/CR-5502, U.S. Nuclear Regulatory Commission, “Engineering Drawings for 10 CFR Part 71 Package Approvals,” UCRL-10-130438, Lawrence Livermore National Laboratory, Livermore, CA, May 1998.

NUREG/CR-5569, U.S. Nuclear Regulatory Commission, “Health Physics Positions Data Base,” Revision 1, ORNL/TM-12067, Oak Ridge National Laboratory, Oak Ridge, TN, February 1994, HPPOS-013, “Averaging of Radiation Levels Over the Detector Probe Area.”

NUREG/CR-5625, U.S. Nuclear Regulatory Commission, “Technical Support for a Proposed Decay Heat Guide Using SAS2H/ORIGEN-S Data,” ORNL-6698, Oak Ridge National Laboratory, Oak Ridge, TN, July 1994.

NUREG/CR-6407, U.S. Nuclear Regulatory Commission, “Classification of Transportation Packaging and Dry Spent Fuel Storage System Components According to Importance to Safety,” INEL-95/0551, Idaho National Engineering Laboratory, Idaho Falls, ID, February 1996.

NUREG/CR-6700, U.S. Nuclear Regulatory Commission, “Nuclide Importance to Criticality Safety, Decay Heating, and Source Terms Related to Transport and Interim Storage of

High-Burnup LWR Fuel," ORNL/TM-2000/284, Oak Ridge National Laboratory, Oak Ridge, TN, January 2001.

NUREG/CR-6701, U.S. Nuclear Regulatory Commission, "Review of Technical Issues Related to Predicting Isotopic Compositions and Source Terms for High-Burnup LWR Fuel," ORNL/TM-2000/277, Oak Ridge National Laboratory, Oak Ridge, TN, January 2001.

NUREG/CR-6716, U.S. Nuclear Regulatory Commission, "Recommendations on Fuel Parameters for Standard Technical Specifications for Spent Fuel Storage Casks," ORNL/TM-2000/385, Oak Ridge National Laboratory, Oak Ridge, TN, March 2001.

NUREG/CR-6798, U.S. Nuclear Regulatory Commission, "Isotopic Analysis of High-Burnup PWR Spent Fuel Samples from the Takahama-3 Reactor," ORNL/TM-2001/259, Oak Ridge National Laboratory, Oak Ridge, TN, January 2003.

NUREG/CR-6802, U.S. Nuclear Regulatory Commission, "Recommendations for Shielding Evaluations for Transport and Storage Packages," ORNL/TM-2002/31, Oak Ridge National Laboratory, Oak Ridge, TN, May 2003.

Oak Ridge National Laboratory, "ORIGEN-2.1: Isotope Generation and Depletion Code-Matrix Exponential Method," Code Package CCC-371, Oak Ridge, TN, 1991.

Oak Ridge National Laboratory, "SCALE: A Comprehensive Modeling and Simulation Suite for Nuclear Safety Analysis and Design," ORNL/TM-2005/39, Version 6.1, June 2011. Available as Code Package CCC-785 from the Radiation Safety Information Computational Center at Oak Ridge National Laboratory, https://rsicc.ornl.gov/Catalog.aspx?c=CCC.

Radiation Safety Information Computational Center, "ORIGEN-2, V2.2: Isotope Generation and Depletion Code Matrix Exponential Method," Code Package CCC-371, Oak Ridge National Laboratory, June 2002.

Radiation Safety Information Computational Center, "SCALE 5: Modular Code System for Performing Standardized Computer Analyses for Licensing Evaluation for Workstations and Personal Computers," Code Package CCC-725, Oak Ridge National Laboratory, June 2004.

Regulatory Guide 3.54, Revision 2, U.S. Nuclear Regulatory Commission, "Spent Fuel Heat Generation in an Independent Spent Fuel Storage Installation," ADAMS Accession No. ML18228A808.

Regulatory Guide 7.7, U.S. Nuclear Regulatory Commission, "Administrative Guide for Verifying Compliance with Packaging Requirements for Shipping and Receiving of Radioactive Material," ADAMS Accession No. ML112160407.

Regulatory Guide 7.9, U.S. Nuclear Regulatory Commission, "Standard Format and Content of Part 71 Applications for Approval of Packages for Radioactive Material," ADAMS Accession No. ML050540321.

Rhodes, J. et al., "CASMO-4 User's Manual," SSP-01/400 Rev 4, Studsvik Scandpower, 2004.

Specific Safety Requirements No. SSR-6, "Regulations for the Safe Transport of Radioactive Material", 2012 Edition, International Atomic Energy Agency, Vienna, Austria, 2012.

TRW Environmental Safety Systems, Inc., “DOE Characteristics Data A00020002-AAX01.0, Base, User Manual for the CDB_R,” TRW-CSCIID A00020002-AAX01.0, Vienna, VA, November 16, 1992.

U.S. Department of Transportation, Pipeline and Hazardous Materials Safety Administration, “Radioactive Material Regulations Review,” December 2008.

6 CRITICALITY EVALUATION

6.1 Review Objective

The objective of this U.S. Nuclear Regulatory Commission (NRC) criticality evaluation is to verify that the transportation package design meets the nuclear criticality safety requirements in Title 10 of the *Code of Federal Regulations* (10 CFR) Part 71, "Packaging and Transportation of Radioactive Material."

6.2 Areas of Review

The NRC staff should review the application to verify that it adequately describes and evaluates the package and includes adequately detailed drawings. In general, the staff should review the following information to determine the adequacy of the package description and evaluation:

- description of criticality design
  - — packaging design features
  - — codes and standards
  - — summary table of criticality evaluations
  - — criticality safety index (CSI)
- contents
- general considerations for criticality evaluations
  - — model configuration
  - — material properties
  - — analysis methods and nuclear data
  - — demonstration of maximum reactivity
  - — confirmatory analyses
  - — moderator exclusion under hypothetical accident conditions
- single package evaluation
  - — configuration
  - — results
- evaluations of package arrays
  - — package arrays under normal conditions of transport
  - — package arrays under hypothetical accident conditions
  - — package arrays results and CSI
- benchmark evaluations
  - — experiments and applicability
  - — bias determination

- burnup credit evaluation for commercial light-water reactor (LWR) spent nuclear fuel (SNF)

  — limits for the certification basis
  — model assumptions
  — code validation—isotopic depletion
  — code validation—k_{eff} determination
  — loading curve and burnup verification

- 33appendix

6.3 Regulatory Requirements and Acceptance Criteria

This section summarizes those sections of 10 CFR Part 71 that are relevant to the criticality review areas addressed in this standard review plan (SRP) chapter. Table 6-1 identifies the regulatory requirements that are relevant to the areas of review covered in this chapter. The reviewer should refer to the exact language in the listed regulations. The reviewer should also refer to the regulations to ensure that no requirements are overlooked as a result of unique packaging design features or contents.

The packaging must be designed and the contents specified such that the package is subcritical under the design-basis conditions, normal conditions of transport, and hypothetical accident conditions (see 10 CFR 71.55(b), (d), and (e), respectively). The application should include evaluations of arrays of packages under normal conditions of transport and under hypothetical accident conditions to determine the maximum number of packages that may be transported in a single shipment, in accordance with 10 CFR 71.59, "Standards for Arrays of Fissile Material Packages." The application should describe the packaging and the contents in sufficient detail to provide an adequate basis for their evaluation. The analyses in the application should show that the package (packaging and contents) design meets the following acceptance criteria:

- The sum of the effective neutron multiplication factor (k_{eff}), two standard deviations (95-percent confidence), and all biases and bias uncertainties should not exceed 0.95 to demonstrate subcriticality by calculation. A bias that reduces the calculated value of k_{eff} should not be applied.

- The assumption of water inleakage for the analysis pursuant to 10 CFR 71.55(b) should consider the packaging and contents to be in their most reactive condition, consistent with the package design, including tolerances. All criticality analyses should include package tolerances.

- The regulatory criteria for uranium hexafluoride packages in 10 CFR 71.55(g) must be met. Note that this requirement allows exception of these packages from the 10 CFR 71.55(b) requirements, if certain conditions are met.

- Criticality evaluations for packages intended for air transport of fissile material or plutonium should also include analyses that consider the most reactive condition of the package and contents, as determined by the tests in 10 CFR 71.55(f) for fissile material or 10 CFR 71.74, "Accident Conditions for Air Transport of Plutonium." For packages intended to transport plutonium by air, this would include optimum internal moderation of the package.

Table 6-1 Relationship of Regulations and Areas of Review for Transportation Packages

Areas of Review	10 CFR Part 71 Regulations															
	71.31	71.33	71.35	71.41	71.43	71.51	71.55	71.59	71.61	71.63	71.64	71.71	71.73	71.74	71.83	71.87
Description of criticality design	(a)(1), (c)	(a)(1) (5)	(b),(c)		(f)	(a)(1)	(a),(b), (d),(e), (f),(g)	(a),(b)			(a)(1)(iii), (b)(2)				●	(f),(g)
Contents	(a)(1)	(b)(1) (2) (3)(4) (8)					(b),(d), (e),(f),(g)			●					●	(f)
General considerations for criticality evaluations	(a)(2), (b)		(a)	(a),(d)	(d),(f)	(a)(1)	(b),(d), (e),(f),(g)		●	●	(a)(1)(iii), (b)(2)	●	●	●	●	(f),(g)
Single package evaluation	(a)(2), (b)		(a)	(a),(d)	(f)	(a)(1)	(b),(d), (e),(f), (g)		●	●	(a)(1)(iii), (b)(2)	●	●	●		(f),(g)
Evaluations of package arrays	(a)(2), (b)		(a),(b)	(a)	(f)	(a)(1)	(d),(e)	(a)(1) (2),(b)	●	●	(a)(1)(iii), (b)(2)	●	●	●		(f)
Benchmark evaluations	(a)(2), (b),(c)		(a)				(b),(d),(e)	(a)								
Burnup credit evaluation for commercial LWR SNF	(a)(2), (b)	(b)(1) (2)(3) (4)	(a),(c)				(b)(1), (d)(1)(3), (e)(1)(2)	(a)							●	(f)

Note: The bullet (●) indicates the entire regulation as listed in the column heading applies.

- Criticality safety design may credit up to 90 percent of the neutron poison material in fixed boron-based neutron absorbers when subject to adequate acceptance and qualification testing (see Section 7.4.7 in this SRP). Otherwise, the packaging model for the criticality evaluation should consider no more than 75 percent of the specified minimum neutron poison concentrations for boron-based absorbers. The amount of credit for nonboron-based absorbers (e.g., cadmium) will be considered on a case-by-case basis and should be supported in the application with proper justification and acceptance and maintenance tests.

- For commercial SNF packages that include nonfuel hardware (NFH) as part of the contents, the applicant should identify and evaluate the most reactive configuration(s) of the contents. In general, the analyses may credit the presence of the NFH if the applicant can demonstrate that the NFH will remain in place under normal conditions of transport and hypothetical accident conditions. The package design description, including drawings, and the package Operating Procedures section of the application should also include descriptions of the components and operations that are necessary to ensure that the NFH remains in its loaded position, consistent with the criticality analyses.

- If credit is taken for residual neutron-absorbing material in NFH, the application should include evaluations demonstrating that the amount credited is appropriate. Credit for residual absorbing material in NFH should be limited to NFH such as pressurized-water reactor (PWR) control element assemblies and reactor-control assemblies, particularly those that are not used as regulating rods in reactor operations. In addition, neutron-absorber material may be credited in unirradiated poison rods or rodlets that are included in the package with the SNF contents.

- The criticality evaluation should include a comparison of the calculation method(s) with applicable benchmark experiments to determine the appropriate bias and bias uncertainties.

- For commercial LWR SNF packages that rely on burnup credit, the burnup credit analysis should follow the criteria and guidance discussed in Section 6.4.7 and Attachment 6A to this SRP chapter.

6.4 Review Procedures

Verify that the applicant has adequately described and evaluated the package's criticality design and demonstrated that the package meets the nuclear criticality safety requirements in 10 CFR Part 71. In addition to the guidance provided in this chapter, consult the information and guidance provided in the appropriate section of Appendix A, "Description, Safety Features, and Areas of Review for Different Types of Radioactive Material Transportation Packages," to this SRP, as applicable. Appendix A includes useful guidance that is specific to several package types.

As part of the evaluation, review and consider the package and contents descriptions presented in the General Information section of the application. Coordinate with the reviewers of the other sections of the application, as applicable and as described in the review procedures in this SRP chapter, to ensure that the applicant has adequately evaluated the packaging and the contents for both normal conditions of transport and hypothetical accident conditions and to ensure that the package will be fabricated, operated, and maintained consistent with the criticality evaluation

and in a manner that the package meets the regulations. This includes ensuring that the acceptance tests include appropriate tests for those packaging components relied on for nuclear criticality safety (e.g., neutron absorbers, basket dimensions). It also includes ensuring that the package operations descriptions cover necessary operations elements and controls for loading, unloading, and transporting fissile material consistent with the criticality safety evaluation, in accordance with 10 CFR 71.35(c). Figure 6-1 illustrates the information flow and interdependency between the reviews of other sections of the application and the review of the criticality section.

As part of the review, ensure that the certificate of compliance (CoC) includes appropriate conditions for the package design, allowable package contents, package operations, and package acceptance and maintenance tests to ensure that the criticality safety performance of the package will be as designed and will meet regulatory requirements. To do this, see also the guidance in Chapter 1, "General Information Evaluation," Chapter 8, "Operating Procedures Evaluation," and Chapter 9, "Acceptance Tests and Maintenance Program Evaluation" of this SRP and work with the reviewers of those chapters.

6.4.1 Description of Criticality Design

6.4.1.1 Packaging design features

Review the General Information section of the application and any additional description of the criticality design presented in the Criticality Evaluation section of the application. Packaging design features important for criticality safety include, but are not limited to, the following:

- dimensions and tolerances of the containment system for fissile material
- structural components that maintain the fissile material or neutron-absorbing and moderating materials in a fixed position within the package or in a fixed position relative to each other, including the dimensions, material compositions, and tolerances for these structural components
- location, dimensions, concentration, and tolerances (both dimensional and composition) of neutron-absorbing materials and moderating materials, including neutron poisons and shielding material
- dimensions and tolerances of any floodable voids, including flux traps, within the package
- dimensions and tolerances of the overall package that affect the physical separation of the fissile material contents in package arrays

Confirm that the text, tables, figures, and sketches describing the criticality design features are consistent with each other; with the information in the General Evaluation section of the application, including the engineering drawings; and with the models used in the criticality evaluation. The drawings are the authoritative source of dimensions, tolerances, and material compositions of components important to criticality safety. The drawings will also become a part of the CoC by reference. Therefore, ensure that the drawings clearly identify and describe, with sufficient specificity, the components and features that provide or affect the packaging's nuclear criticality safety function (e.g., minimum areal density of boron-10 in neutron absorbers) under design-basis conditions and under normal conditions of transport and the appropriate

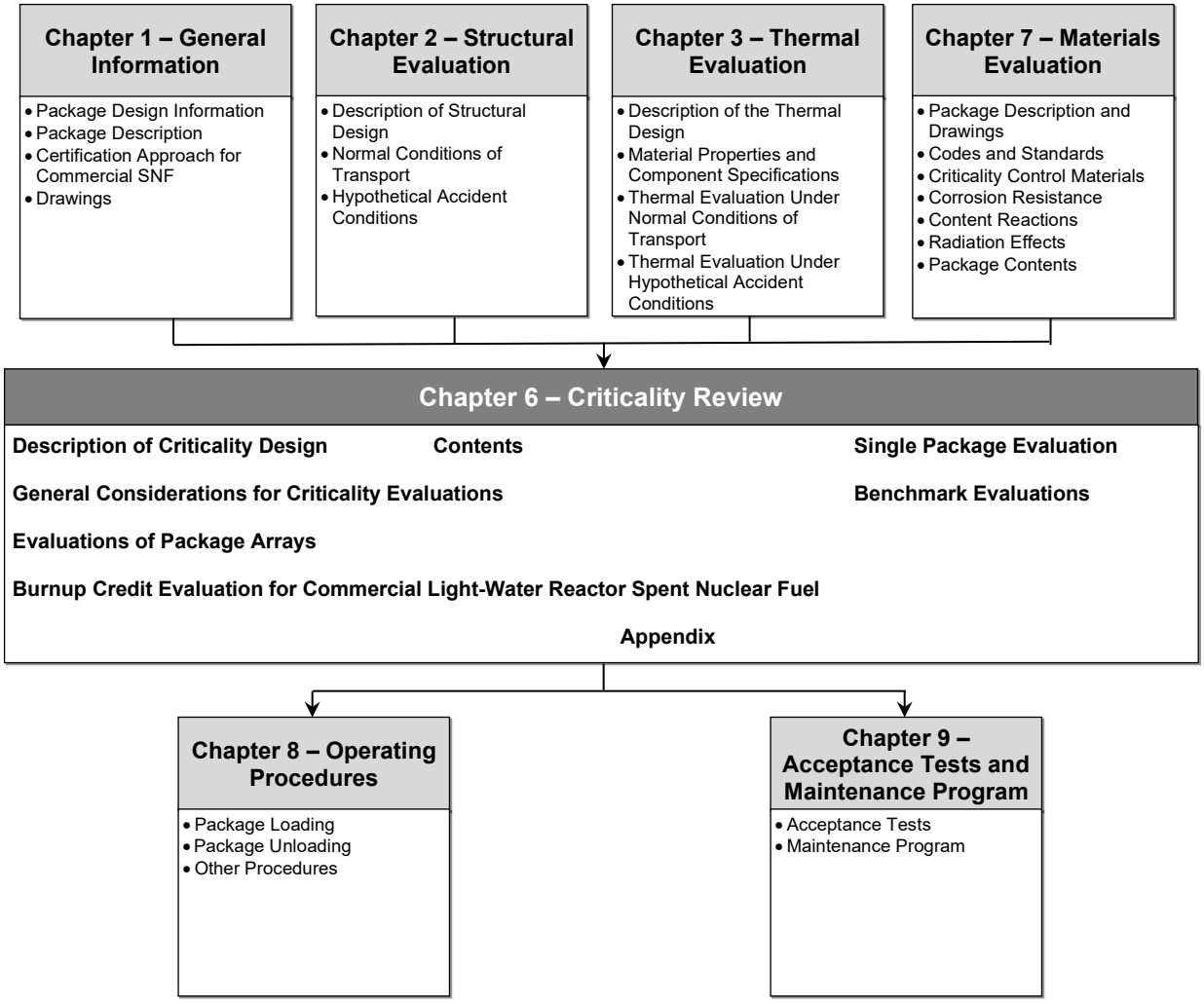

Figure 6-1 Information Flow for the Criticality Evaluation

accident conditions (i.e., as applicable, the tests in 10 CFR 71.55(f), 10 CFR 71.73, "Hypothetical Accident Conditions," and 10 CFR 71.74). The degree of specificity should be commensurate with the sensitivity of the package's performance with the particular feature.

Ensure that the specifications in the drawings are consistent with or bounded by the specifications used in the criticality analyses, including reasonable tolerances for dimensions and material specifications. In reviewing the drawings, refer to NUREG/CR-5502, "Engineering Drawings for 10 CFR Part 71 Package Approvals," issued May 1998, and NUREG/CR-6407, "Classification of Transportation Packaging and Dry Spent Fuel Storage System Components According to Importance to Safety," issued February 1996. These documents contain information that may be useful in determining whether the drawings provide sufficient details. Also, coordinate with the structural reviewer to understand the performance of these packaging design features under normal conditions of transport and hypothetical accident conditions.

6.4.1.2 Codes and standards

Verify that the applicant identified the established codes and standards used in all aspects of the criticality design and evaluation, if any, and that the applicant used them appropriately.

Coordinate this review, as appropriate, with the other reviewers. For example, review of codes and standards regarding neutron absorber materials should be coordinated with the materials reviewer (see Section 7.4.7 and Attachment 7A to this SRP). Also, consider the staff's position on the use of standards as described in documents such as Regulatory Guide 3.71, "Nuclear Criticality Safety Standards for Fuels and Material Facilities," in determining the acceptability of the applicant's use of any standards in the design or evaluation of the package.

6.4.1.3 Summary table of criticality evaluations

Review the summary table of the criticality evaluation, which should address the following cases, as described in Sections 6.4.4 to 6.4.6 in this SRP chapter:

- a single package under the conditions of 10 CFR 71.55(b), (d), and (e)
- an array of 5N undamaged packages under the conditions of 10 CFR 71.59(a)(1)
- an array of 2N damaged packages under the conditions of 10 CFR 71.59(a)(2)

For a fissile material package designed for air transport, the table should also address a single package under the conditions of 10 CFR 71.55(f). For a package for air transport of plutonium, the table should address both a single package and an array of packages under the conditions of 10 CFR 71.64(a)(1)(iii) and (b). This means that the analyses for 10 CFR 71.55(e) and 10 CFR 71.59(a)(2) must use the damaged condition of the package resulting from the 10 CFR 71.74 accident conditions tests instead of the 10 CFR 71.73 hypothetical accident conditions tests, accounting for the additional considerations in 10 CFR 71.64(b). The other conditions of 10 CFR 71.55(e) and 10 CFR 71.59(a)(2), including optimum internal moderation, would still apply to these analyses.

Verify that the table includes results for all relevant cases. Also verify that for each case the table includes the maximum value of k_{eff}, the uncertainty, the bias and bias uncertainty, and for the array cases, the number of packages evaluated in the arrays. The table should also show that the sum of k_{eff}, two standard deviations (95-percent confidence), and the bias adjustment does not exceed 0.95 for each case. For packages that have multiple fissile material content types or multiple content loading configurations (e.g., canisters containing SNF from a specific reactor versus canisters containing general classifications of SNF assemblies) and for which separate evaluations are performed for each content type, verify that the table includes the results for all relevant cases for each content type.

Confirm that the summary table illustrates that the package meets the above subcriticality criterion for all of the package's types of fissile contents.

6.4.1.4 Criticality safety index

The CSI designates the degree of control of accumulation of fissile material packages during transportation (see 10 CFR 71.4, "Definitions"). The CSI is limited to ensure that the number of packages in a shipment does not exceed the number that was evaluated. The CSI is included on the package label for a fissile package shipment. The regulation in 10 CFR 71.59(c) describes the CSI limits for shipments in nonexclusive-use and exclusive-use conveyances. The limits include those for both the individual package CSI and the total CSI for all of the packages shipped in the conveyance, both of which must be met for the type of conveyance to be used.

Based on the number of packages evaluated in the arrays, verify that the applicant has determined the appropriate value of N and calculated the CSI correctly. The appropriate value of N will be the smaller of values determined from the arrays evaluated according to 10 CFR 71.59(a)(1) and (a)(2). For packages with multiple types of fissile contents or multiple content configurations, the applicant may determine a separate CSI for each type of contents or content configuration. In addition, for some packages or some fissile content types in a package, the applicant may determine the CSI, in accordance with 10 CFR 71.22, "General License: Fissile Material," or 10 CFR 71.23, "General License: Plutonium-Beryllium Special Form Material." Ensure that the CSI for the package, or for each package content type or content configuration, is consistent with that reported in the General Information section of the application.

6.4.2 Contents

Ensure that the application clearly and adequately describes the package contents, providing those specifications that are relevant to the criticality safety of the package. The application should show the entire range of contents specifications, or characteristics, that the applicant considered and should specify the limiting values (maximum or minimum, as appropriate) for the contents specifications. Nominal values may be used if the safety of the package is insensitive to small changes in the specified parameter (e.g., active fuel length). Ensure that the specifications for the contents used in the criticality evaluation are consistent with or bound those in the General Information section of the application. The application should include a description of the contents in an appropriate and easy-to-understand format (e.g., a table of fuel assembly parameters) that is suitable for inclusion in a CoC. There should be a clear nexus between the contents description and the criticality safety analysis. The specificity of the contents description may be different for different package types or may depend on how the applicant performed the analyses. For contents properties that are not known or are not well known, ensure that the applicant has assumed these properties have credible values that maximize reactivity in the criticality analyses, consistent with 10 CFR 71.83, "Assumptions as to Unknown Properties."

Also, for some package types, the applicant may propose that the material may be exempted from classification as fissile material per 10 CFR 71.15 and therefore exempt from the fissile material package standards in 10 CFR 71.55, "General Requirements for Fissile Material Packages," and 10 CFR 71.59, "Standards for Arrays of Fissile Material Packages." In such cases, ensure that the other content descriptions in the application are consistent with the limits in 10 CFR 71.15 for this exemption and that the CoC includes this limitation on the package contents.

An application may include only some contents specifications in the General Information section and place the rest in the different evaluation sections (e.g., the Criticality Evaluation and Shielding Evaluation sections). For this reason, coordinate with the reviewers of those sections too, as needed, to confirm the consistency of contents specifications within the application. Verify that the application clearly identifies and justifies any differences from the specifications in the General Information section and the other relevant application sections. Coordinate with the other reviewers to ensure that a CoC for package approval includes the contents specifications necessary to ensure that the package meets the 10 CFR Part 71 criticality safety requirements. In general, if the applicant takes credit for certain parameters (e.g., confinement features, uranium enrichment, chemical form) or the analyses indicate that certain parameters affect the criticality safety of the package, then the description of the authorized contents should specify those parameters.

For fissile material contents, verify that the application provides significant detail consistent with the criticality analysis of the package. Specifications relevant to the criticality evaluation include fissile material mass, dimensions, uranium enrichment(s), fissile nuclides present and their concentrations, physical and chemical composition and form, density, internal moderation (e.g., moisture, plastic inserts, or wrap for assemblies), and other characteristics, depending on the specific contents. These other characteristics may include the contents' configuration(s) in the package and the inclusion of any materials that act as neutron moderators or neutron poisons and the material, dimension, and configuration specifications of these materials. They may also include spacers or other features used for geometry control, though these features may be considered as part of the packaging design and included in the engineering drawings instead. Because a partially filled container may allow more room for moderators (e.g., water), the most reactive case may be for a mass of fissile material that is less than the maximum allowable contents.

In addition to the characteristics described above, the relevant contents specifications for fuel assembly or fuel element contents include many characteristics that apply to the criticality analysis, such as the following:

- types of assemblies or elements [e.g., PWR, boiling-water reactor (BWR), research reactor (e.g., flat or curved plate fuel, pin fuel)]
- whether the contents are complete assemblies or elements or the contents are loose rods or fuel plates
- dimensions of fuel material (e.g., pellet diameter, including any annular pellets, for rods or thickness and width for fuel plates), cladding material and dimensions, fuel-cladding gap, pitch, and rod or plate length
- inclusion of items to prevent assembly damage during transport (e.g., polymer inserts to prevent wear due to vibration); wrapping of fresh fuel assemblies with plastic is permitted if the top and bottom are open to allow free flow of water sufficient to prevent preferential flooding of the fuel region
- configurations of poison-bearing rods (e.g., fuel rods containing gadolinium oxide) in unirradiated BWR fuel assemblies
- number of rods (and lattice configuration, such as 15x15) or fuel plates per assembly and locations of guide tubes, water rods, and burnable poisons (see Section 6.4.3.2), including numbers and locations of partial-length rods
- inclusion of fuel assembly components, hardware such as BWR fuel channels, or unirradiated neutron-absorber rods
- active fuel length
- mass of heavy metal per assembly or element or per rod or fuel plate
- number of fuel assemblies or elements or the number of individual rods or fuel plates per package

With regard to enrichment, assemblies may have fuel enrichments that vary by rod or by axial lattice location. Ensure that the application clearly describes how the enrichment is defined for the contents and demonstrates that the definition is appropriate for use in ensuring that the fuel assembly contents in the package will be subcritical. The applicant's evaluation should either assume the maximum initial enrichment or demonstrate that another approach (e.g., average enrichment) is bounding.

For irradiated, or spent, fuel, ensure that the application specifies parameters such as enrichment and mass of heavy metal per assembly (or element) as initial (i.e., preirradiation) values. Also, ensure that the application includes the descriptions and specifications of any NFH to be included with the SNF contents. This hardware includes items such as control-rod assemblies, burnable poison rod assemblies, fuel channels, and other items that are operated and irradiated within the fuel assembly envelope in the reactor.

For applications that take credit for residual absorber in commercial reactor control components to be loaded with SNF, ensure that the application includes appropriate specifications, such as maximum burnup (or irradiation exposure) and operational history in the core (e.g., operated in the "bite" position in the core or as a regulating rod) to characterize the amount of absorber material remaining in the nonfuel hardware. Verify that the application includes analyses demonstrating that the amount of residual absorber being credited will be present in the control components and that the analyses are conservative for or consistent with the component's use in the core (e.g., in the "bite" position or as a regulating rod). The analysis should include a depletion analysis of the initial absorber loading for a bounding maximum burnup and should not take any credit for nuclides that may build up in the control component as a result of irradiation. In other words, the criticality analysis should take credit only for residual amounts of the initial absorber material that remains after depletion. Ensure that the depletion analysis uses conservative assumptions (e.g., for neutron-flux factors). Given uncertainties in these analyses that result from things such as lack of data to "benchmark" the depletion of these components and uncertainties in the irradiation history, the applicant should credit only a fraction of the residual absorber material in the criticality evaluation. The applicant should justify that the fraction of credit used in the analysis is appropriate to account for the uncertainties in the depletion analysis for the control component.

In addition, for commercial reactor SNF contents for which the applicant requested burnup credit, ensure that the application specifies appropriate characteristics for assemblies for which burnup is credited. These characteristics include minimum burnups versus maximum enrichment and reactor operating parameters during assembly irradiation (e.g., exposure limits to control-rod insertion, in-core soluble boron concentrations, moderator temperature, and assembly specific power). Section 6.4.7 of this SRP provides guidance regarding burnup credit.

Determine whether the application for an SNF package includes any specifications regarding the condition of the SNF. If the contents include damaged fuel, confirm that the application specifies the maximum extent of damage allowed and that the applicant's criticality analyses show the package containing damaged fuel is subcritical. Fuel rods that have been removed from an assembly should be replaced with dummy rods that displace an equal or greater amount of water unless the criticality analyses consider the additional moderation resulting from their absence. (Because of the additional moderation, the contents with less fissile material might be more reactive). Ensure that the CoC includes specifications regarding the condition of the SNF in the conditions describing the approved contents. Coordinate this review with the materials evaluation reviewer as necessary (see Section 7.4.14 of this SRP).

NUREG/CR-6716, “Recommendations on Fuel Parameters for Standard Technical Specifications for Spent Fuel Storage Casks,” issued March 2001, also includes useful information about the fuel parameters that are important for criticality safety for a commercial SNF transport package. Parameters that are normally controlled in CoC conditions include fuel type, lattice size, enrichment, fuel rod pitch, fuel pellet diameter, cladding thickness, and active fuel length. It is not necessary to limit all parameters if the analysis has shown that they are not important for the package evaluation. For example, if the applicant evaluates the criticality safety of the fuel without taking credit for the clad material being present, the minimum clad thickness may not need to be specified.

If the package is designed for multiple types of contents, including multiple types of SNF or multiple content configurations, verify that the description of the contents is sufficient to permit a detailed criticality evaluation of each type or configuration or to support a conclusion that certain types or configurations are bounded by those that the applicant did evaluate. The application may include a separate criticality evaluation and propose different criticality controls (e.g., fissile mass limits, uranium enrichment limits, CSI) for each content type or configuration. Or the application may include an evaluation that bounds all content types and configurations and propose criticality controls that apply to all content types and configurations. The review procedures in this section and the rest of this chapter apply to each content type, including each type of SNF, and configuration evaluated in the application.

6.4.3 General Considerations for Criticality Evaluations

The considerations discussed below apply to the criticality evaluations of a single package, arrays of packages under normal conditions of transport, and arrays under hypothetical accident conditions. NUREG/CR-5661, “Recommendations for Preparing the Criticality Safety Evaluation of Transportation Packages,” issued April 1997, provides general guidance for preparing criticality evaluations of transportation packages.

6.4.3.1 Model configuration

Verify that the applicant’s analysis includes a model for demonstrating compliance with 10 CFR 71.55(b) and that the model is consistent with the as-designed package, including tolerances and materials specifications of package components that maximize reactivity. Coordinate with the structural evaluation, thermal evaluation, and materials evaluation reviewers to determine the effects of the normal conditions of transport and hypothetical accident conditions on the packaging and its contents. Verify that the models used in the criticality calculation are consistent with these effects.

Verify the dimensions of the contents and packaging used in the criticality models. Ensure that they are consistent with the package drawings and contents specifications in the application. Confirm that the applicant has identified and justified any differences between the models and the drawings and contents specifications. For some types of packagings and contents (e.g., powders), the contents can be positioned at varying locations and densities. Verify that the application justifies the relative location and physical properties of the contents within the packaging as those resulting in the maximum multiplication factor. Verify that the application considers dimensional tolerances for parameters such as cavity sizes and poison thickness in a way that maximizes reactivity.

Verify that the application considers deviations from nominal design configurations. For example, fuel assemblies might not always be centered in each basket compartment, and the

basket might not be exactly centered in an SNF package. In addition to a fully flooded package, confirm that the application addresses preferential flooding, as appropriate. For fuel assemblies, this includes flooding of the fuel-cladding gap and other regions (e.g., flux traps) for which water density might not be uniform in a flooded package. Also ensure that the application considers partially loaded packages since, in some cases, packages loaded to less than the maximum capacity may be more reactive.

For packages designed to transport fuel assemblies (fresh or spent), determine whether the application includes a heterogeneous model of each fuel rod or homogenizes the entire assembly. With current computational capability, homogenization should generally be avoided. If homogenization is used, the application must demonstrate that it is applied correctly or conservatively. At a minimum, this demonstration should include calculation of the multiplication factor of one assembly and several benchmark experiments (see Section 6.4.6) using both homogeneous and heterogeneous models.

Also, for SNF packages that include damaged fuel contents, determine whether the applicant has adequately evaluated a package containing damaged fuel, including identification of a bounding reconfiguration of the contents. For those evaluations that rely on damaged fuel cans or other features to confine the geometry of the damaged SNF, ensure that the applicant's analyses are consistent with the design specifications of these features. Also ensure that the package drawings, which will become part of the CoC, include these features with the specifications that are important to their function of confining the damaged SNF within a set geometric configuration.

6.4.3.2 Material properties

Verify the materials that are used in the criticality models for the packaging and contents. Verify that the applicant provided appropriate mass densities and atom densities for materials used in the models of the packaging and contents. Material properties should be at the specifications or tolerances that maximize reactivity and that are consistent with the condition of the package under the tests of 10 CFR 71.71, "Normal Conditions of Transport," and 10 CFR 71.73. For fissile material packages designed or intended for air transport, the material properties should also be consistent with the condition of the package under the tests described in 10 CFR 71.55(f). For plutonium packages designed or intended for air transport, the material properties should be consistent with the condition of the package under the tests described in 10 CFR 71.74 instead of the tests described in 10 CFR 71.73. Verify that the application addresses any differences between normal conditions of transport and the appropriate accident conditions, as identified above. Confirm that the application includes references for the data sources of the material properties.

Ensure that all materials relevant to the criticality design (e.g., poisons, foams, plastics, and other hydrocarbons) are properly specified. Confirm that the values used for neutron poisons match the minimum required values credited in the criticality analysis. Also confirm that, for neutron absorbers that are part of the packaging, the analysis does not credit more than the minimum amount of neutron absorber the acceptance testing and qualification testing verified , subject to the criteria described in Section 6.3 and Section 7.4.7 of this SRP. Ensure that neutron absorbers and moderators (e.g., poisons and neutron shielding) are properly controlled during fabrication to meet their specified properties. The Acceptance Tests and Maintenance Program section of the application should discuss such information in more detail. For packages that include other kinds of absorbers, such as unirradiated poison rods or rodlets loaded with fuel contents or nonboron-based absorbers (e.g., cadmium), confirm that the

applicant's analysis credits only an amount of absorber material that is consistent with or bounding for the absorbers, accounting for material and dimensional tolerances, other relevant fabrication variabilities, and neutronics properties. For packages that credit these kinds of absorbers, ensure that the application describes how these absorbers will be maintained in the positions for which they are credited in the analysis. Working with the materials reviewer, ensure that the application includes adequate acceptance tests for these absorbers too, as applicable and appropriate.

In addition, for commercial SNF packages, because of differences in net reactivity resulting from the depletion of fissile material and burnable poisons, in general, no credit should be taken for burnable poisons in the fuel. Also, in general, the application should not credit any negative reactivity from residual neutron-absorbing material remaining in commercial reactor control components also loaded with the commercial SNF as nonfuel hardware. However, this credit may be taken and should be accepted only if (i) the remaining absorbing material content is established through direct measurement or by calculation where a sufficient margin of safety is included, commensurate with the uncertainty in the method of measurement or calculation; (ii) the axial distribution of the poison depletion is adequately determined with appropriate margin for uncertainties; and (iii) the adequate structural integrity and placement of the control components under accident conditions are demonstrated. For evaluations with water in the package, which is always fresh water for package analyses, a bounding analysis would assume that no nonfuel hardware, including control components, are present. The applicant may take credit for water displacement, provided that adequate structural integrity and placement under accident conditions are demonstrated.

Review materials to identify any materials that are relevant to the criticality design that have properties that could degrade during the service life of the packaging. If appropriate, ensure that specific controls are in place to ensure the effectiveness of the packaging during its service life. The Acceptance Tests and Maintenance Program or Operating Procedures sections of the application should discuss such information in more detail.

Coordinate the reviews of the material properties described here with the materials reviewer. For the materials properties of SNF packages that rely on burnup credit, see the burnup credit guidance in Section 6.4.7 of this SRP chapter.

6.4.3.3 Analysis methods and nuclear data

Verify that the applicant used an appropriate method and appropriate data for the package analyses the regulations required and that are discussed in this SRP chapter. The vast majority of package criticality analysis methods use computer codes and the nuclear data included with those codes. However, depending on the applicant's approach, the applicant may use other methods that may also be appropriate to demonstrate subcriticality. Even for analyses that use computer codes, although the algorithm and calculation process that a computer code uses is a method (e.g., Monte Carlo versus deterministic technique) and should be evaluated that way, the analysis method is more than just the computer code. In other words, the computer code is a part of the analysis method. The analysis method includes the nuclear data, such as the cross-section libraries, used in the analysis and the selection of the data. The method also includes things such as key assumptions and parameters and the approach to modeling the contents and the packaging components. For noncode-based analyses as well, the method includes things such as the nuclear data used in the analysis, key assumptions and parameters, and the approach to analyzing the package contents and packaging components.

Verify that the application uses an appropriate computer code (or other acceptable method) for the criticality evaluation and that the applicant has used the code (or other method) properly. Both Monte Carlo and deterministic computer codes may be used for criticality calculations. Because Monte Carlo codes are generally better suited to analyzing three-dimensional geometry, they are more widely used to evaluate SNF cask designs. The application should clearly reference standard codes, such as SCALE/KENO (ORNL 2011) and MCNP (MCNP5 2003), used in the analysis. KENO is part of the SCALE code system and allows the use of both multigroup and continuous-energy cross sections, while MCNP uses continuous-energy cross sections. If the analysis uses other codes or methods, the application should describe these other codes or methods and provide appropriate supplemental information.

Ensure that the criticality evaluations use an appropriate cross-section library. If multigroup cross sections are used, confirm that the neutron spectrum of the package has been appropriately considered for collapsing the group structure and that the cross sections are properly processed to account for resonance absorption and self-shielding. The use of KENO as part of the SCALE sequence will directly enable such processing. Some cross-section sets include data for fissile and fertile nuclides (based on a potential scattering cross section, σ_p) that the user can input. If the applicant has used a stand-alone version of KENO, ensure that potential scattering has been properly considered. NRC Information Notice (IN) 91-26, "Potential Nonconservative Errors in the Working Format Hansen-Roach Cross-Section Set Provided with the KENO and SCALE Codes," dated April 2, 1991, and NUREG/CR-6328, "Adequacy of the 123-Group Cross-Section Library for Criticality Analyses of Water-Moderated Uranium Systems," issued June 1995, provide additional information addressing cross-section concerns.

In addition to cross-section information, verify that the application identifies other key input data for the criticality calculations. These data include the number of neutrons per generation, number of generations, convergence criteria, and mesh selection, depending on the code used. The application should also include at least one representative input file for a single package, undamaged array, and damaged array evaluation. Verify, as appropriate, that information for the model configuration, material properties, and cross sections is properly input into the code.

Generally, the application should also include at least one representative output file (or key sections). Ensure that the calculation has properly converged and that the calculated multiplication factors from the output files agree with those reported in the evaluation.

6.4.3.4 Demonstration of maximum reactivity

Verify that the application evaluates each type of allowable contents or clearly demonstrates that some types are bounded by the contents for which the applicant performed evaluations. For packages for fuel assemblies, whether an unirradiated fuel package or an SNF package, this includes verifying that the application evaluates each type of fuel assembly or shows that the evaluated types bound the remaining types.

Verify that, for each contents type, the analyses demonstrate the maximum k_{eff} for each of the cases discussed in Section 6.4.1.3 above (single package, array of undamaged packages, and array of damaged packages for the relevant conditions). Verify that the application clearly identifies and justifies assumptions and approximations.

Ensure that the analysis determines the optimum combination of internal moderation (within the package) and interspersed moderation (between packages), as appropriate. Confirm that

preferential flooding of different regions within the package is considered, as appropriate. As noted in Section 6.4.2 of this SRP chapter, the maximum allowable amount of fissile material may not be the most reactive.

NUREG/CR-5661 presents additional guidance on determining the most reactive configurations.

Confirm that the applicant's evaluation demonstrates that the package calculations are adequately converged and addresses the statistical uncertainties of the package calculations. Verify that the applicant applied the uncertainties to at least the 95-percent confidence level. As a general rule, if the acceptability of the criticality evaluation results depends on these rather small differences, question the overall degree of conservatism of the calculations. Considering the current availability of computer resources, enough neutron histories can readily be used so that the treatment of these statistical uncertainties should not significantly affect the results.

6.4.3.5 Confirmatory analyses

Perform a confirmatory analysis of the criticality calculations reported in the application, as appropriate. At a minimum, perform an independent calculation of the most reactive case, as well as sensitivity analyses to confirm that the most reactive case has been correctly identified. In deciding the necessary level of effort to perform independent confirmatory calculations, consider the following factors: (i) the calculational method (computer code) the applicant used, (ii) the degree of conservatism in the applicant's assumptions and analyses, (iii) the size of the margin between the calculated result and the acceptance criterion of $k_{eff} \leq 0.95$, and (iv) the degree of similarity to previously approved packages or package contents. A small margin below the acceptance criterion or a small degree of conservatism in the applicant's analyses may likely necessitate a more extensive analysis. This would be particularly true if aspects of the applicant's analysis seem to be questionable and may be significant to the analysis and to the criticality safety of the package (e.g., things the applicant did not include or items that were treated in a possibly nonconservative manner).

To the extent practical, model the package independently and use a different code and cross-section set from those used in the application. If the reported k_{eff} for the worst case is substantially lower than the acceptance criterion of 0.95, a simple model known to produce very conservative results may be all that is necessary for the independent calculations. A review is not expected to validate the applicant's calculations but should confirm that the regulations and acceptance criteria are met.

When the value of k_{eff} is highly sensitive to small variations in design features, contents specifications, or the effects of the relevant test conditions (i.e., 10 CFR 71.71, 10 CFR 71.73, 10 CFR 71.55(f), and 10 CFR 71.74, as applicable), confirm that the applicant appropriately considered such variations.

6.4.3.6 Moderator exclusion under hypothetical accident conditions

For commercial LWR SNF, refer to Section 1.4.4 of this SRP, which describes approach options for addressing subcriticality of SNF that is categorized as intact or undamaged fuel[4] under hypothetical accident conditions. Thus, the review guidance in this section applies only to intact or undamaged commercial SNF for hypothetical accident conditions. This section does not

[4] Note that the International Atomic Energy Agency's Safety Series No. 6, "Regulations for the Safe Transport of Radioactive Material," includes similar, but not identical, requirements for fissile material packages.

apply to evaluations for compliance with 10 CFR 71.55(b) and so does not change guidance related to meeting that requirement that is described in the other sections of this SRP chapter.

As described in Section 1.4.4 of this SRP, the applicant may choose to demonstrate package subcriticality under hypothetical accident conditions by showing that (i) reconfigured fuel is subcritical even with water inleakage, or (ii) the package excludes water under hypothetical accident conditions. Verify that the application describes the evaluation approach. Also determine that the applicant has adequately justified use of the selected approach and has adequately demonstrated that the package is subcritical. For this review, consult the guidance in Section 1.4.4 of this SRP and coordinate with the other reviewers (e.g., materials evaluation, structural evaluation) to ensure that the applicant adequately evaluated the package for the selected approach and that the applicant's criticality analysis is consistent with or bounding for the evaluated condition of the package and commercial SNF contents for the applicant's selected approach. Also coordinate with the other reviewers to ensure that the package operating procedures, acceptance tests, and maintenance programs in the application include the appropriate procedures and tests to ensure that the package is operated, fabricated, and maintained consistent with the evaluations in the application.

For the first approach, the fuel reconfiguration geometries should either be based on the material properties of the SNF cladding and the impact loads imposed on the fuel assemblies or be those that are appropriately bounding for criticality. NUREG/CR-6835, "Effects of Fuel Failure on Criticality Safety and Radiation Dose for Spent Fuel Casks," issued September 2003, and NUREG/CR-7203, "A Quantitative Impact Assessment of Hypothetical Spent Fuel Reconfiguration in Spent Fuel Storage Casks and Transportation Packages," issued September 2015, provide information on the reactivity effects of various postulated fuel reconfiguration scenarios that may be useful for this review. For the second approach, the criticality assessment would use credible or bounding reconfigured fuel configurations and assume moderator exclusion. For analyses to demonstrate compliance with 10 CFR 71.55(b), SNF that is intact or undamaged when loaded into the package can be assumed to be in its as-loaded configuration.

6.4.4 Single Package Evaluation

6.4.4.1 Configuration

Ensure that the criticality evaluation demonstrates that a single package is subcritical in the as-designed condition for compliance with 10 CFR 71.55(b) and under both normal conditions of transport and hypothetical accident conditions for compliance with 10 CFR 71.55(d) and (e), respectively. For packages for air transport of fissile material, ensure that the evaluation also demonstrates that a single package is subcritical under the accident conditions in 10 CFR 71.55(f). For packages for air transport of plutonium, ensure that the evaluation for compliance with 10 CFR 71.55(e) uses the damaged condition of the package resulting from the accident tests in 10 CFR 71.74, consistent with the considerations required in 10 CFR 71.64(a)(1)(iii) and (b). Verify that the evaluation considered the following:

- fissile material in its most reactive credible configuration, consistent with the condition of the package and the chemical and physical form of the contents

- water moderation to the most reactive credible extent, including water leakage into the containment system as specified in 10 CFR 71.55(b)

- full water reflection on all sides of the package, including close reflection of the containment system or reflection by the package materials, whichever is more reactive, as specified in 10 CFR 71.55(b)(3)

6.4.4.2 Results

Confirm that the results of the criticality calculations are consistent with the information presented in the summary table discussed in Section 6.4.1.3. If the package can be shown to be subcritical by reference to a standard such as American National Standards Institute/American Nuclear Society (ANSI/ANS) 8.1-1998, "Nuclear Criticality Safety in Operations with Fissionable Materials Outside Reactors" (in lieu of calculations), verify that the standard is applicable to, or bounding for, the package conditions and contents.

Verify also that the package meets the additional specifications of 10 CFR 71.55(d)(2) through 10 CFR 71.55(d)(4) under normal conditions of transport. These requirements address subcriticality, alteration of the geometric form of the contents, inleakage of water, and effectiveness of the packaging.

6.4.5 Evaluations of Package Arrays

6.4.5.1 Package arrays under normal conditions of transport

Ensure that the criticality evaluation demonstrates that an array of 5N packages is subcritical under normal conditions of transport. Verify that the evaluation considered the following:

- the most reactive configuration of the array (e.g., pitch, package orientation), with the most reactive interstitial moderation between the packages

- the most reactive, credible configuration of the packaging and its contents under normal conditions of transport. If the water spray test has demonstrated that water would not leak into the package, water inleakage need not be assumed (as is typically the case for packages such as SNF packages)

- full water reflection on all sides of the array (unless the array is infinite)

Verify that the application clearly identifies the most reactive array conditions and that the results of the analysis are consistent with the information presented in the summary table discussed in Section 6.4.1.3 above.

6.4.5.2 Evaluation of package arrays under hypothetical accident conditions

Ensure that the criticality evaluation demonstrates that an array of 2N packages is subcritical under hypothetical accident conditions (or the accident conditions resulting from the tests in 10 CFR 71.74 for packages for air transport of plutonium). Verify that the evaluation considered the following:

- the most reactive configuration of the array (e.g., pitch, package orientation, internal moderation)

- optimum interspersed hydrogenous moderation (between packages)

- the most reactive, credible configuration of the packaging and its contents under accident conditions (the appropriate accident conditions from 10 CFR 71.73 or 10 CFR 71.74), including inleakage of water and internal moderation (including optimum moderation and, if applicable, partial flooding)

- full water reflection on all sides of the array (unless the array is infinite)

Verify that the application clearly identifies the most reactive array conditions and that the results of the analysis are consistent with the information presented in the summary table discussed in Section 6.4.1.3 above.

6.4.5.3 Package arrays results and criticality safety index

Confirm that the appropriate N value is used to determine the CSI in accordance with 10 CFR 71.59(a) and (b). The appropriate N should be the smallest value that ensures subcriticality for 2N packages under the appropriate accident conditions, whether 10 CFR 71.73 (which will apply to most packages) or 10 CFR 71.74 (for packages for air transport of plutonium), or 5N packages under normal conditions of transport, as discussed in the previous subsections.

Verify that the application includes results, including the CSI determination, for each package content type, if the applicant performed evaluations for or proposes different CSI values for each type of contents. If the applicant proposes a single CSI value, provides results for only a single type of contents, and represents that type of contents as bounding of the others, confirm that the results and proposed value are indeed bounding for all package content types. When developing the CoC, ensure that the certificate conditions specify the appropriate CSI value(s) for the correct content type(s).

6.4.6 Benchmark Evaluations

Ensure that the applicant has benchmarked the computer codes for criticality calculations against appropriate critical experiments. Verify that the applicant used the same computer code, hardware, and cross-section library to analyze the benchmark experiments as those used to calculate the multiplication factor for the package evaluations. In the application, the k_{eff} results should include the calculated package k_{eff}(s), bias(es) and uncertainty(ies) (i.e., bias uncertainties) from the benchmark calculations, and the k_{eff}(s) as adjusted to include the bias(es) and bias uncertainty(ies). Ensure that the applicant's benchmark evaluation is a comparison of the calculated results to the experimental results and not a code-to-code comparison. The staff does not accept code-to-code comparisons as benchmark evaluations. This staff position is consistent with guidance in industry standards regarding benchmarking and validation (e.g., see ANSI/ANS 8.1-1998 (R2007), Section 4.3.1, "Establishment of Bias," including the footnotes).

NUREG/CR-6361, "Criticality Benchmark Guide for Light-Water-Reactor Fuel in Transportation and Storage Packages," issued March 1997, and NUREG/CR-6698, "Guide for Validation of Nuclear Criticality Safety Calculational Methodology," issued January 2001, provide additional information on benchmarking criticality evaluations.

For mixed oxide (MOX) SNF evaluations, the differences between the package and benchmark experiments may be more substantial because there are fewer experiments for MOX than for low-enriched uranium. Thus, it may be more difficult to properly consider these differences and

assign a bias value. Refer to Appendix D to this SRP for information regarding available MOX benchmark experiments and their important characteristics and for guidance on selecting appropriate benchmark experiments and determining a conservative bias from the benchmark analysis.

6.4.6.1 Experiments and applicability

Review the general description of the benchmark experiments, and confirm that they are appropriately referenced.

Verify that the applicant has selected benchmark experiments that apply to the actual packaging design and contents. Verify that the applicant has adequately justified either the selection of any experiments that do not readily appear to be applicable or the neglect of any experiments that would seem to be appropriate for use in benchmarking the package evaluation. The benchmark experiments should have, to the maximum extent possible, the same materials, neutron spectrum, and configuration(s) as the package evaluations for each type of contents. Key package parameters that should be compared with those of the benchmark experiments include type of fissile material, enrichment, H/X ratio (where H is hydrogen (moderator) and X is the fissile material; dependent largely on rod pitch and diameter for commercial SNF cases), poisoning, reflector material, and configuration. Confirm that the application discusses and properly considers differences between the package and benchmarks.

The Nuclear Energy Agency's "International Handbook of Evaluated Criticality Safety Benchmark Experiments," updated annually, provides information on benchmark experiments that may apply to the cask being analyzed.

In addition, verify that the application addresses the overall quality of the benchmark experiments and the uncertainties in experimental data (e.g., mass, density, dimensions, reported k_{eff} results). Ensure that these uncertainties are treated conservatively (i.e., they result in a lower calculated multiplication factor for the benchmark experiment).

In recent years, some analytical tools have been developed that may be useful for identifying applicable benchmark experiments and evaluating the quality of the experiments. These tools include SCALE's TSUNAMI tools, which use sensitivity and uncertainty techniques to provide a quantitative measure of the overall similarity of an experiment to the analyzed package, as well as a variety of indicators to evaluate similarity or utility of experiments with respect to different aspects that may be important to the package evaluation.

6.4.6.2 Bias determination

Examine the applicant's results for the calculations for the benchmark experiments and the method used to account for biases and bias uncertainties, including the contribution from uncertainties in experimental data.

Confirm that the applicant analyzed a sufficient number of appropriate benchmark experiments and used the results of these benchmark calculations to determine an appropriate bias and bias uncertainty for the package calculations.[5] Confirm that the applicant evaluated the benchmark analysis results for trends in the bias with respect to parameter variations (such as pitch-to-rod-diameter ratio, assembly separation, reflector material, neutron-absorber material, H/X ratio, energy of average lethargy of neutrons causing fission). Evaluate the applicant's trending analysis to verify that the analysis considers appropriate subsets of the entire selection of benchmarks. For example, for a selection of experiments that includes some with neutron-absorber materials and some without absorber materials, the trend in bias for the entire selection of experiments may differ significantly versus the bias trend for the subset of experiments that include neutron-absorber materials. Verify that only negative biases (results that underpredict k_{eff}) are considered, with positive bias results (values that decrease k_{eff} when applied) treated as zero bias. Confirm that the applicant has determined the biases and bias uncertainties versus the measured (i.e., experimentally determined) k_{eff} values of the experiments, which may not always be unity or 1.0.

Also verify that the applicant demonstrates that the ranges of applicability of the experiments and bias evaluation adequately cover the package evaluations for the parameters important to criticality safety and that the coverage within the range of applicability is also adequate. Verify that the applicant justified any extrapolation, if done, of the bias and bias uncertainty beyond the ranges of applicability. Verify that the applicant also justified the appropriateness of the bias and bias uncertainty and trending analysis for areas within the range of applicability where data (experiments and calculation results) are limited or significant gaps exist between clusters of data, particularly if the package evaluation results for the higher reactivity configurations are in these gaps. For cases where extrapolation is necessary or data in the range of applicability are limited, confirm that the applicant considered the need to include additional margin in the analyses or uncertainty in the bias. NUREG/CR-5661 and NUREG/CR-6361 provide additional information on determining a bias and its range of applicability.

Confirm that the applicant's evaluation demonstrates that the benchmark calculations are adequately converged and addresses statistical uncertainties in the benchmark calculations. Apply the guidance in Section 6.4.3.4 of this SRP chapter regarding convergence and statistical uncertainties for the applicant's package calculations to the evaluation of the applicant's benchmark calculation.

6.4.7 Burnup Credit Evaluation for Commercial Light-Water Reactor Spent Nuclear Fuel

The regulations in 10 CFR Part 71 require that SNF remain subcritical in transportation. While unirradiated reactor fuel ("fresh fuel") has a well-specified nuclide composition that provides a straightforward and bounding approach to the criticality safety analysis of transportation packages, the nuclide composition changes as the fuel is irradiated in the reactor. Ignoring the presence of burnable poisons, this composition change will cause the reactivity of the fuel to

[5] The benchmark and bias determination methods described in this SRP and related references for criticality safety analyses are based on an analysis of a sufficient number of experiments for which statistical normality has been demonstrated. For experiment sets for which statistical normality has not been demonstrated, including sets that are too few in number to enable this demonstration, the applicant and the staff should use other appropriate statistical methods to evaluate the benchmarks used in the application.

decrease. In the criticality safety analysis, allowance for the decrease in fuel reactivity resulting from irradiation is termed “burnup credit.”

This section provides recommendations to the NRC reviewer for accepting, on a design-specific basis, a burnup credit approach in the criticality safety analysis of PWR SNF transportation packages. The guidance represents one method for demonstrating compliance with the criticality safety requirements in 10 CFR Part 71 using burnup credit. Follow this guidance to determine whether the applicant has provided reasonable assurance that the transportation package meets the applicable criticality safety regulations in 10 CFR Part 71. Consider alternative methodologies applicants propose on a case-by-case basis, using this guidance to the extent practicable.

The following recommendations were developed with intact fuel as the basis but may also apply to fuel that is not intact. If an applicant requests burnup credit for fuel that is not intact, apply the recommendations provided below, as appropriate, to account for uncertainties that can be associated with fuel that is not intact, and establish an isotopic inventory and assumed fuel configuration for the as-designed package and for normal conditions of transport and hypothetical accident conditions that bound the uncertainties.

The recommendations in this chapter do not include burnup credit for BWR fuel assemblies, as the technical basis for BWR burnup credit in SNF transportation packages has not been fully developed. The NRC has initiated a research project to obtain that technical basis. BWR fuel assemblies typically have neutron-absorbing material, typically gadolinium oxide (Gd_2O_3), mixed in with the uranium oxide of the fuel pellets in some rods. This neutron absorber depletes more rapidly than the fuel during the initial parts of its irradiation, which causes the fuel assembly reactivity to increase and reach a maximum value at an assembly-average burnup typically less than 20 gigawatt-days per metric ton of uranium (GWd/MTU). Then, reactivity decreases for the remainder of fuel assembly irradiation. Criticality analyses of BWR SNF pools typically employ what are known as “peak reactivity” methods to account for this behavior. NUREG/CR-7194, “Technical Basis for Peak Reactivity Burnup Credit for BWR Spent Nuclear Fuel in Storage and Transportation Systems,” issued April 2015, reviews several existing peak reactivity methods and demonstrates that a conservative set of analysis conditions can be identified and implemented to allow criticality safety analysis of BWR SNF assemblies at peak reactivity in SNF transportation packages. Consult NUREG/CR-7194 if the applicant uses peak reactivity BWR burnup credit methods in its criticality analysis.

This SRP does not address credit for BWR burnup beyond peak reactivity. The NRC is currently evaluating this type of burnup credit as part of a research program. The purpose of the program is to investigate methods for conservatively including such credit in a BWR criticality analysis for SNF transportation packages. The NRC does not recommend burnup credit beyond peak reactivity at this time. Consider conservative analyses of BWR burnup credit beyond peak reactivity on a case-by-case basis, consulting the latest research results in this area (i.e., NRC letter reports and NUREG/CRs).

The recommendations in this section also do not include burnup credit analyses for MOX or thorium SNF assemblies. Evaluate MOX burnup credit analyses on a case-by-case basis, noting that there are few MOX data available for isotopic depletion or criticality code validation. Analyses for MOX burnup credit should include substantial conservatism in the representation of MOX material in the criticality model and large k_{eff} penalties for unvalidated fuel materials. Thorium fuel criticality analyses will require a depletion analysis to determine the most reactive fuel composition with irradiation. Similar to the situation for MOX SNF, code validation data are

limited for thorium SNF, and criticality analyses should include large conservatisms and k_{eff} penalties for unvalidated materials.

Attachment 6A to this SRP chapter provides more information on the technical bases for the recommendations described below.

6.4.7.1 Limits for the certification basis

Available data support allowance for burnup credit where the safety analysis is based on major actinide compositions only (i.e., actinide-only burnup credit) or limited actinide and fission product compositions (see Table 6-2) associated with uranium dioxide (UO_2) fuel irradiated in a PWR up to an assembly-average burnup value of 60 GWd/MTU and cooled out of reactor for a time period between 1 and 40 years. The range of available measured assay data for irradiated UO_2 fuel supports an extension of the certification basis up to 5.0 weight percent enrichment in uranium-235.

Within this range of parameters, carefully assess whether the analytic methods and assumptions used are appropriate, especially near the limits of the parameter ranges recommended here for the certification basis. Verify that the use of actinide and fission product compositions associated with burnup values or cooling times outside these specifications is accompanied by the measurement data or justified extrapolation techniques, or both, necessary to extend the isotopic validation and quantify or bound the bias and bias uncertainty. If the applicant credits neutron-absorbing isotopes other than those identified in Table 6-2, ensure that the applicant gives assurance that such isotopes are nonvolatile, nongaseous, and relatively stable and provides analyses to determine the additional depletion and criticality code bias and bias uncertainty associated with these isotopes.

A certificate condition indicating the time limit on the validity of the burnup credit analysis may be necessary in light of the possible use of the package to transport SNF that has been in storage for an extended time. Such a condition would depend on the type of burnup credit and the credited post-irradiation decay time.

6.4.7.2 Model assumptions

Confirm that the applicant calculated the actinide and fission product compositions used to determine a value of k_{eff} using fuel design and reactor operating parameter values that appropriately encompass the range of design and operating conditions for the proposed contents. Verify that the applicant calculated the k_{eff} value using models and analysis assumptions that allow accurate representation of the physics in the package, as discussed in Section 6A.4 of Attachment 6A to this chapter of the SRP. Pay attention to the need to do the following:

- Account for and effectively model the axial and horizontal variation of the burnup within an SNF assembly (e.g., the selection of the axial burnup profiles, number of axial material zones).

- Consider the potential for increased reactivity because of the presence of burnable absorbers or control rods (fully or partially inserted) during irradiation.

Table 6-2 Recommended Set of Nuclides for Burnup Credit	
Type of Burnup Credit	**Recommended Set of Nuclides**
Actinide-only burnup credit	^{234}U, ^{235}U, ^{238}U, ^{238}Pu, ^{239}Pu, ^{240}Pu, ^{241}Pu, ^{242}Pu, ^{241}Am
Additional nuclides for actinide-plus-fission product burnup credit	^{95}Mo, ^{99}Tc, ^{101}Ru, ^{103}Rh, ^{109}Ag, ^{133}Cs, ^{143}Nd, ^{145}Nd, ^{147}Sm, ^{149}Sm, ^{150}Sm, ^{151}Sm, ^{152}Sm, ^{151}Eu, ^{153}Eu, ^{155}Gd, ^{236}U, ^{237}Np, ^{243}Am

- Account for the irradiation environment factors to which the proposed assembly contents were exposed, including fuel temperature, moderator temperature and density, soluble boron concentration, specific power, and operating history.

YAEC-1937, "Axial Burnup Profile Database for Pressurized Water Reactors," issued May 1997, provides representative data that can be employed for establishing profiles for use in the safety analysis. However, exercise care when reviewing profiles intended to bound the range of potential k_{eff} values for the proposed contents for each burnup range, particularly near the upper end of the certification-basis parameter ranges stated in this guidance. NUREG/CR-6801, "Recommendations for Addressing Axial Burnup in PWR Burnup Credit Analyses," issued March 2003, provides additional guidance on selecting axial profiles.

A design-basis modeling assumption, where the assemblies are exposed during irradiation to the maximum (neutron absorber) loading of burnable poison rod assemblies (BPR) for the maximum burnup, encompasses all assemblies that may or may not have been exposed to BPRs. Such an assumption in the safety analysis should also encompass the impact of exposure to fully inserted or partially inserted control rods in typical domestic PWR operations. Assemblies exposed to atypical insertions of control rods (e.g., full insertion for one full cycle of reactor operation) should not be loaded unless the safety analysis explicitly considers such operational conditions. If the assumed BPR exposure is less than the maximum for which burnup credit is requested, confirm that the applicant has provided a justification commensurate with the selected value. For example, the lower the exposure, the greater the need to (i) support the assumption with available data, (ii) indicate how administrative controls would prevent a misload of an assembly exposed beyond the assumed value, and (iii) address such misloads in a misload analysis.

For assemblies exposed to integral burnable absorbers, the appropriate analysis assumption for absorber exposure varies depending on burnup and absorber material. The appropriate assumption may be to neglect the absorber while keeping the other assembly parameters (e.g., enrichment) the same for some absorber materials or for exposures up to moderate burnup levels (typically 20–30 GWd/MTU). Thus, a safety analysis including assemblies with integral burnable absorbers should include justification of the absorber exposure assumptions used in the analysis. For assemblies exposed to flux suppressors (e.g., hafnium suppressor inserts) or combinations of integral absorbers and BPRs or control rods, the safety analysis should use assumptions that provide a bounding safety basis, in terms of the effect on package k_{eff}, for those assemblies.

Confirm that the applicant's evaluation includes analyses that use irradiation conditions that produce bounding values for k_{eff}, as discussed in Section 6A.4 of Attachment 6A to this SRP chapter. The bounding conditions may differ for actinide-only burnup credit versus actinide-plus-fission product burnup credit and may depend on the characteristics of the SNF intended to be transported in the package (e.g., all PWR assemblies versus a site-specific population). Contents specifications tied to the actual reactor operating conditions may be

needed unless the operating condition values used in the evaluation can be justified as those that produce the maximum k_{eff} values for the proposed SNF contents.

6.4.7.3 Code validation—isotopic depletion

Confirm that the applicant validated the computer codes used to calculate isotopic depletion. A depletion computer code is used to determine the concentrations of the isotopes important to burnup credit. To ensure accurate criticality calculation results, the selected code should be validated and the bias and bias uncertainty of the code should be determined at a 95-percent probability, 95-percent confidence level. Ensure that the application reflects the following considerations in the selection of the code and code validation approach for the fuel-depletion analysis.

The selected depletion code and cross-section library should be capable of accurately modeling the fuel geometry and the neutronic characteristics of the environment in which the fuel was irradiated. Two-dimensional depletion codes have been effectively used in burnup credit analyses. Although one-dimensional codes have been used in some applications and suffice for making assembly-average isotopic predictions for fuel burnup, they are limited in their ability to model increasingly complex fuel assembly designs and generally produce larger bias and bias-uncertainty values because of the approximations necessary in the models. Section 6A.4 of Attachment 6A to this SRP chapter discusses in detail the modeling considerations for the code validation analyses.

The destructive radiochemical assay (RCA) data selected for code validation should include detailed information about the SNF samples. This information should include the pin location in the assembly, axial location of the sample in the pin, any exposure to strong absorbers (control rods, BPRs), the boron letdown, moderator temperature, specific power, and any other cycle-specific data for the cycles in which the sample was irradiated. Some RCA data are not suitable for depletion code validation, because the depletion histories or environments of these samples are either difficult to accurately define in the code benchmark models or are unknown. NUREG/CR-7108, "An Approach for Validating Actinide and Fission Product Burnup Credit Criticality Safety Analyses—Isotopic Composition Predictions," issued April 2012, provides a recommended set of RCA data suitable for depletion-code validation.

The selected code validation approach should be adequate for determining the bias and bias uncertainty of the code for the specific application. The burnup credit analysis results should be adjusted using the bias and bias uncertainty determined for the fuel-depletion code, accounting for any trends of significance with respect to different control parameters, such as burnup-to-enrichment ratio or ratio of uranium-235 to plutonium-239. NUREG/CR-6811, "Strategies for Application of Isotopic Uncertainties in Burnup Credit," issued June 2003, provides several methods the NRC finds acceptable for isotopic-depletion validation, including the isotopic correction factor, direct-difference, and Monte Carlo uncertainty sampling methods. Section 6A.5 of Attachment 6A to this SRP chapter discusses in detail the advantages and disadvantages of these methods. In general, the isotopic correction factor method is considered to be the most conservative because individual nuclide composition uncertainties are represented as worst case. The direct-difference method provides a realistic "best estimate" of the depletion-code bias and bias uncertainty, in terms of difference in k_{eff} (Δk_{eff}). The Monte Carlo uncertainty sampling method is more complex and computationally intensive than the other methods, but it provides a way to use the limited measurement data sets for some nuclides. NUREG/CR-7108 gives detailed descriptions of the direct-difference and Monte Carlo uncertainty sampling methods.

Instead of an explicit benchmarking analysis, the applicant may use the bias (β_i) and bias uncertainty (Δk_i) values estimated in NUREG/CR-7108 using the Monte Carlo uncertainty sampling method, as shown in Tables 6-3 and 6-4. These values may be used directly, provided that all of the following are true:

- The applicant uses the same depletion code and cross-section library as used in NUREG/CR-7108 (SCALE/TRITON and the ENDF/B-V or ENDF/B-VII cross-section library).
- The applicant can justify that its transportation package design is similar to the hypothetical 32-PWR-assembly-capacity, generic burnup credit cask (GBC-32) system design (NUREG/CR-6747, "Computational Benchmark for Estimation of Reactivity Margin from Fission Products and Minor Actinides in PWR Burnup Credit," issued October 2001) used as the basis for the NUREG/CR-7108 isotopic-depletion validation.
- Credit is limited to the specific nuclides listed in Table 6-2.

Section 6A.5 of Attachment 6A to this SRP chapter discusses in detail the technical basis for the restrictions on directly applying the bias and bias-uncertainty values. Bias values should be added to the calculated package k_{eff}, while bias-uncertainty values may be statistically combined with other independent uncertainties. Table 6-5 summarizes the recommendations related to isotopic-depletion-code validation

6.4.7.4 Code validation—k_{eff} determination

Actinide-Only Credit

Credit should be limited to the specific nuclides listed in Table 6-2 for actinide-only burnup credit. Criticality validation for these actinides should be based on the critical experiments described in NUREG/CR-6979, "Evaluation of the French Haut Taux de Combustion (HTC) Critical Experiment Data," issued September 2008, also known as the HTC data, supplemented by MOX critical experiments as appropriate. NUREG/CR-7109, "An Approach for Validating Actinide and Fission Product Burnup Credit Criticality Safety Analyses—Criticality (k_{eff}) Predictions," issued April 2012, contains a detailed discussion of available sets of criticality validation data for actinide isotopes and the relative acceptability of these sets. Note that NUREG/CR-7109 demonstrates that fresh UO_2 experiments are not applicable to burned fuel compositions.

Verify that the applicant determined the bias and bias uncertainty associated with actinide-only burnup credit according to the guidance in NUREG/CR-6361. This guidance includes criteria for the selection of appropriate benchmark data sets, as well as statistics and trending analysis for the determination of criticality code bias and bias uncertainty. Section 6 of NUREG/CR-7109 provides an example of bias and bias uncertainty determination for actinide-only burnup credit.

Fission Product and Minor Actinide Credit

Confirm that the applicant has determined an adequate and conservative bias and bias uncertainty associated with fission product and minor actinide credit. The applicant may credit the minor actinide and fission product nuclides listed in Table 6-2, provided that the bias and bias uncertainty associated with the major actinides is determined as described above. The bias from these minor actinides and fission products is conservatively covered by 1.5 percent of

Table 6-3 Isotopic k_{eff} Bias Uncertainty (Δk_i) for the Representative PWR SNF System Model Using ENDF/B-VII Data ($\beta_i = 0$) as a Function of Assembly Average Burnup		
Burnup (BU) Range (GWd/MTU)	**Actinides Only, Δk_i**	**Actinides and Fission Products Δk_i**
0≤BU<5	0.0145	0.0150
5≤BU<10	0.0143	0.0148
10≤BU<18	0.0150	0.0157
18≤BU<25	0.0150	0.0154
25≤BU<30	0.0154	0.0161
30≤BU<40	0.0170	0.0163
40≤BU<45	0.0192	0.0205
45≤BU<50	0.0192	0.0219
50≤BU≤60	0.0260	0.0300

Table 6-4 Isotopic k_{eff} Bias (β_i) and Bias Uncertainty (Δk_i) for the Representative PWR SNF System Model Using ENDF/B-V Data as a Function of Assembly Average Burnup		
Burnup (BU) Range (GWd/MTU)[a]	**β_i for Actinides and Fission Products**	**Δk_i for Actinides and Fission Products**
0≤BU<10	0.0001	0.0135
10≤BU<25	0.0029	0.0139
25≤BU≤40	0.0040	0.0165
[a]Bias and bias uncertainties associated with ENDF/B-V data were calculated for a maximum of 40 GWd/MTU. For higher burnups, applicants should provide an explicit depletion-code validation analysis using one of the methods described in Attachment 6A to this SRP chapter, along with appropriate RCA data.		

Table 6-5 Summary of Code Validation Recommendations for Isotopic Depletion	
Applicant's Approach	**Recommendation**
Applicant uses SCALE/TRITON and the ENDF/B-V or -VII cross-section library, and demonstrates that the design application is similar to GBC-32.	Use code bias and bias uncertainty values from Tables 6-3 and 6-4 of this SRP.
- or -	
Applicant uses other code or cross-section library, or both, or design application is not similar to GBC-32.	Use either isotopic-correction factor or direct-difference method to determine code bias and bias uncertainty.

their worth. Because of the conservatism in this value, no additional uncertainty in the bias needs to be applied. This estimate is appropriate if the applicant does the following:

- uses the SCALE code system with the ENDF/B-V, ENDF/B-VI, or ENDF/B-VII cross-section libraries, or MCNP5 or MCNP6 with the ENDF/B-V, ENDF/B-VI, ENDF/B-VII, or ENDF/B-VII.1 cross-section libraries

- justifies that its transportation package design is similar to the hypothetical GBC-32 system design (NUREG/CR-6747) used as the basis for the NUREG/CR-7109 criticality validation

- demonstrates that the credited minor actinide and fission product worth is no greater than 0.1 in k_{eff}

For well-qualified, industry-standard code systems other than SCALE or MCNP, the applicant may use a conservative estimate for the bias associated with minor actinide and fission product nuclides of 3.0 percent of their worth. If the applicant uses a minor actinide and fission product bias less than 3.0 percent, ensure that the application includes additional justification that the lower value is an appropriate estimate of the bias associated with that code system (e.g., a minor actinide and fission product worth comparison to SCALE results or an analysis similar to that described in NUREG/CR-7109 or NUREG/CR-7205, "Bias Estimates Used in Lieu of Validation of Fission Products and Minor Actinides in MCNP K_{eff} Calculations for PWR Burnup Credit Casks"). Table 6-6 summarizes the recommendations related to minor actinide and fission product code validation for k_{eff} determination. For actinide criticality validation in all cases, the applicant should perform criticality code validation analyses to determine bias and bias uncertainty associated with actinides using HTC critical experiments, supplemented by applicable MOX critical experiments. Ensure that the applicant performed the validation analyses correctly and adequately.

6.4.7.5 Loading curve and burnup verification

Confirm that the applicant provided burnup credit loading curves to determine which fuel assemblies may be loaded into the transportation package. Confirm that the burnup-credit evaluations include loading curves that specify the minimum required assembly-average burnup as a function of initial enrichment for the purpose of loading the SNF transportation package. Confirm that the applicant has established separate loading curves for each content or set of contents. For example, a separate loading curve should be provided for each minimum cooling time to be considered in the package loading. In addition, confirm that the applicant justified the applicability of the loading curve to bound various fuel types or burnable absorber loadings.

Ensure that the Criticality Evaluation and Package Operations sections in the application include performance of burnup verification to ensure that a transportation package evaluated using burnup credit is not loaded with an assembly more reactive than those included in the loading criteria. Verification should include a measurement that confirms the reactor record for each assembly. Confirmation of reactor records using measurement of a sample of fuel assemblies will be considered if the sampling method can be justified in comparison to measuring every assembly.

The assembly burnup value to be used for loading acceptance (termed the assigned burnup loading value) should be the confirmed reactor record value as adjusted by reducing the record value by a combination of the uncertainties in the record value and the measurement. NUREG/CR-6998, "Review of Information for Spent Nuclear Fuel Burnup Confirmation," issued December 2009, contains bounding estimates of reactor record burnup uncertainty.

Measurements should be correlated to reactor record burnup, enrichment, and cooling time values. Measurement techniques should account for any measurement uncertainty (typical within a 95-percent confidence interval) in confirming reactor burnup records. The application should also include a database of measured data (if measuring a sampling of fuel assemblies) to justify the adequacy of the procedure compared to procedures that measure each assembly.

Table 6-6 Summary of Minor Actinide and Fission Product Code Validation Recommendations for k_{eff} Determination	
Applicant's Approach	**Recommendation**
Applicant uses SCALE code system with ENDF/B-V, ENDF/B-VI, or ENDF/B-VII cross-section libraries, or MCNP5 or MCNP6 with the ENDF/B-V, ENDF/B-VI, ENDF/B-VII, or ENDF/B-VII.1 cross-section libraries; design application is similar to GBC-32; and credited minor actinide and fission product worth is < 0.1 in k_{eff}.	Use bias equal to 1.5 percent of minor actinide and fission product worth.
- or -	
Applicant uses other code with ENDF/B-V, ENDF/B-VI, or ENDF/B-VII cross-section libraries; design application is similar to GBC-32; and credited minor actinide and fission product worth is < 0.1 in k_{eff}.	Use bias equal to 3.0 percent of minor actinide and fission product worth, or provide justification for lower number.
- or -	
Applicant uses cross-section library other than ENDF/B-V, ENDF/B-VI, or ENDF/B-VII; design application is not similar to GBC-32; or credited minor actinide and fission product worth is > 0.1 in k_{eff}.	Perform explicit criticality code validation for minor actinide and fission product nuclides.

Misload Analyses

Misload analyses may be performed in lieu of a burnup measurement. A misload analysis should address potential events involving the placement of assemblies into the SNF transportation package that do not meet the proposed loading criteria. Confirm that the applicant has demonstrated that the package remains subcritical for misload conditions, including calculation biases, uncertainties, and an appropriate administrative margin that is not less than 0.02 Δk. If any administrative margin less than the normal 0.05 Δk is used, verify that the application provides an adequate justification that includes the level of conservatism in the depletion and criticality calculations, sensitivity of the package to further upset conditions, and the level of rigor in the code validation methods.

If used, ensure that the misload analysis considers (i) misloading of a single, severely underburned assembly and (ii) misloading of multiple, moderately underburned assemblies.

The severely underburned assembly for the single misload analysis should be chosen such that the misloaded assembly's reactivity bounds 95 percent of the discharged PWR fuel population considered unacceptable for loading in the transportation package with 95-percent confidence. The moderately underburned assemblies for the multiple-misload analysis should be assumed to make up at least 50 percent of the package payload and should be chosen such that the misloaded assemblies' reactivity bounds 90 percent of the total discharged PWR fuel population. The NRC finds the results of the most recent U.S. Energy Information Administration's "Nuclear Fuel Data Survey" (RW-859) or later similar fuel data sources (i.e., GC-859), acceptable to estimate the discharged fuel population characteristics.

Also ensure that the misload analysis considers the effects of placing the underburned assemblies in the most reactive positions within the loaded package (e.g., middle of the fuel basket). If removable nonfuel absorbers were credited as part of the criticality safety analysis (e.g., poison rods added to guide tubes), ensure that the misload analysis considers misloading of these absorbers. Additionally, ensure that the misload analysis considers assemblies with greater burnable absorber or control-rod exposure than assumed in the criticality analysis if the assumed exposure is not bounding. NUREG/CR-6955, "Criticality Analysis of Assembly

Misload in a PWR Burnup Credit Cask," issued January 2008, illustrates the magnitude of k_{eff} changes that can be expected as a result of various misloads in a theoretical GBC-32 SNF storage and transportation system.

Administrative Procedures

Confirm that the applicant has included administrative procedures for loading that will protect against misloads. Ensure that the misload analysis is coupled with additional administrative procedures to ensure that the SNF transportation package will be loaded with fuel that is within the specifications of the approved contents. Procedures the applicant may consider to protect against misloads in transportation packages that rely on burnup credit for criticality safety include the following:

- verification of the location of high-reactivity fuel (i.e., fresh or severely underburned fuel) in the SNF pool, both before and after loading
- qualitative verification that the assembly to be loaded is burned (visual or gross measurement)
- under an NRC-approved quality assurance program, verification before shipment of the inventory and loading records of a canister or storage cask that was previously loaded and placed into dry storage and that is to be shipped in or as the package
- quantitative measurement of any fuel assemblies without visible identification numbers
- independent, third-party verification of the loading process, including the fuel selection process and generation of the fuel move instructions

Table 6-7 summarizes the recommendations for burnup verification.

6.4.8 Appendix

Confirm that the application includes a list of references, copies of applicable references if not generally available, computer code descriptions, input and output files, test results, and any other appropriate supplemental information. The applicant may include these items in an appendix to the Criticality Evaluation section of the application.

6.5 Evaluation Findings

Prepare evaluation findings upon satisfaction of the regulatory requirements in Section 6.3. If the documentation submitted with the application fully supports positive findings for each of the regulatory requirements, the statements of findings should be similar to the following:

F6-1 The staff has reviewed the package and concludes that the application adequately describes the package contents and the package design features that affect nuclear criticality safety in compliance with 10 CFR 71.31(a)(1), 71.33(a), and 71.33(b) and provides an appropriate and bounding evaluation of the package's criticality safety performance in compliance with 10 CFR 71.31(a)(2), 71.31(b), 71.35(a), and 71.41(a).

Table 6-7 Summary of Burnup Verification Recommendations	
Applicant's Approach	**Recommendation**
Applicant takes burnup verification measurement.	Measure each assembly to be loaded or a statistically significant sample of assemblies.
- or -	
Applicant conducts misload analysis and provides additional administrative procedures.	Analyze misload of fuel assembly that bounds reactivity of 95 percent of underburned fuel population with 95-percent confidence.
	Analyze misload of 50 percent of package capacity with fuel assemblies with reactivity that bounds 90 percent of total fuel population.
	Include additional administrative procedures as part of transportation package loading.

F6-2 [if applicable] The staff has reviewed the package and concludes that the application identifies the codes and standards used in the package's criticality safety design in compliance with 10 CFR 71.31(c).

F6-3 The staff has reviewed the package and concludes that the application specifies the number of packages that may be transported in the same vehicle through provision of an appropriate CSI in compliance with 10 CFR 71.35(b). [if applicable] The applicant specifies an appropriate CSI for each type of fissile content.

F6-4 The staff has reviewed the package and concludes that the applicant used packaging features and package contents configurations and materials properties in the criticality safety analyses that are consistent with and bounding for the package's design basis, including the effects of the normal conditions of transport and the relevant accident conditions in 10 CFR 71.55(f), 71.73, or 71.74 [select the relevant requirements]. The applicant has adequately identified the package configurations and material properties that result in the maximum reactivity for the single package and package array analyses.

F6-5 The staff has reviewed the package and concludes that the criticality evaluations in the application of a single package demonstrate that it is subcritical under the most reactive credible conditions, in compliance with 10 CFR 71.55(b), 71.55(d), and 71.55(e) [and 10 CFR 71.55(f) for fissile packages transported by air or 10 CFR 71.64(a)(1)(iii) for plutonium packages transported by air]. The evaluations in the application also demonstrate that the effects of the normal conditions of transport tests do not result in a significant reduction in the packaging's effectiveness in terms of criticality safety, in compliance with 10 CFR 71.43(f) and 10 CFR 71.55(d)(4) and, for Type B fissile packages, 10 CFR 71.51(a)(1). The evaluations in the application also demonstrate that the geometric form of the contents is not substantially altered under the normal conditions of transport tests, in compliance with 10 CFR 71.55(d)(2).

F6-6 The staff has reviewed the package and concludes that the criticality evaluation in the application of the most reactive array of 5N undamaged packages demonstrates that the array of 5N packages is subcritical under normal conditions of transport to meet the requirements in 10 CFR 71.59(a)(1).

F6-7 The staff has reviewed the package and concludes that the criticality evaluation in the application of the most reactive array of 2N packages subjected to the tests in 10 CFR 71.73 [or 10 CFR 71.74 for plutonium packages transported by air, per

10 CFR 71.64(a)(1)(iii)] demonstrates that the array of 2N packages is subcritical under hypothetical accident conditions in 10 CFR 71.73 [or under the accident conditions in 10 CFR 71.74] to meet the requirements in 10 CFR 71.59(a)(2).

F6-8 The staff has reviewed the package and concludes that the applicant's evaluations include an adequate benchmark evaluation of the calculations. The applicant identified and evaluated experiments that are relevant and appropriate for the package analyses and performed appropriate trending analyses of the benchmark calculation results. The applicant has determined an appropriate bias and bias uncertainties for the criticality evaluation of the package.

F6-9 The staff has reviewed the package and concludes that the application identifies the necessary special controls and precautions for transport, loading, unloading, and handling and, in case of accidents, compliance with 10 CFR 71.35(c). [For commercial SNF packages evaluated using burnup credit.] These controls include additional contents specifications (e.g., fuel loading curve(s), reactor operating parameters) and administrative procedures to prevent package misloads.

F6-10 The staff has reviewed the package and concludes that the evaluations in the application assume unknown properties of the fissile contents are at credible values that maximize neutron multiplication consistent with 10 CFR 71.83. [For commercial SNF packages evaluated using burnup credit.] This includes following the recommendations in Section 6.4.7 and Attachment 6A to this SRP chapter for crediting the burnup of the SNF contents.

The reviewer should provide a summary statement similar to the following:

> Based on review of the statements and representations in the application, the staff has reasonable assurance that the proposed package design and contents satisfy the nuclear criticality safety requirements in 10 CFR Part 71. In making this finding, the staff considered the regulation itself, appropriate regulatory guides, applicable codes and standards, accepted engineering practices, and the staff's own independent confirmatory calculations.

6.6 References

10 CFR Part 71, "Packaging and Transportation of Radioactive Material."

American National Standards Institute/American Nuclear Society 8.1-1998 (Reaffirmed 2007), "Nuclear Criticality Safety in Operations with Fissionable Materials Outside Reactors," American Nuclear Society, La Grange Park, IL.

International Atomic Energy Agency, "Regulations for the Safe Transport of Radioactive Material," Specific Safety Requirements No. SSR-6, 2012 Edition, Vienna.

Information Notice No. 91-26, "Potential Nonconservative Errors in the Working Format Hansen-Roach Cross-Section Set Provided with the KENO and SCALE Codes," U.S. Nuclear Regulatory Commission, Washington, DC, April 2, 1991.

Nuclear Energy Agency, "International Handbook of Evaluated Criticality Safety Benchmark Experiments," Nuclear Science Committee, updated and published annually, https://www.oecd-nea.org/science/wpncs/icsbep/handbook.html.

MCNP5, "MCNP—A General Monte Carlo N-Particle Transport Code, Version 5; Volume II: User's Guide," LA-CP-03-0245, Los Alamos National Laboratory, Los Alamos, NM, April 2003.

NUREG/CR-5502, U.S. Nuclear Regulatory Commission, "Engineering Drawings for 10 CFR Part 71 Package Approvals," UCRL-ID-130438, Lawrence Livermore National Laboratory, Livermore, CA, May 1998.

NUREG/CR-5661, U.S. Nuclear Regulatory Commission, "Recommendations for Preparing the Criticality Safety Evaluation of Transportation Packages," ORNL/TM-11936, Oak Ridge National Laboratory, Oak Ridge, TN, April 1997.

NUREG/CR-6328, U.S. Nuclear Regulatory Commission, "Adequacy of the 123-Group Cross-Section Library for Criticality Analyses of Water-Moderated Uranium Systems," ORNL/TM-12970, Oak Ridge National Laboratory, Oak Ridge, TN, June 1995.

NUREG/CR-6361, U.S. Nuclear Regulatory Commission, "Criticality Benchmark Guide for Light-Water-Reactor Fuel in Transportation and Storage Packages," ORNL/TM-13211, Oak Ridge National Laboratory, Oak Ridge, TN, March 1997.

NUREG/CR-6407, U.S. Nuclear Regulatory Commission, "Classification of Transportation Packaging and Dry Spent Fuel Storage System Components According to Importance to Safety," Idaho National Engineering Laboratory, Idaho Falls, ID, February 1996.

NUREG/CR-6698, U.S. Nuclear Regulatory Commission, "Guide for Validation of Nuclear Criticality Safety Calculational Methodology," Science Applications International Corporation, Oak Ridge, TN, January 2001.

NUREG/CR-6716, U.S. Nuclear Regulatory Commission, "Recommendations on Fuel Parameters for Standard Technical Specifications for Spent Fuel Storage Casks," ORNL/TM-2000/385, Oak Ridge National Laboratory, Oak Ridge, TN, March 2001.

NUREG/CR-6747, U.S. Nuclear Regulatory Commission, "Computational Benchmark for Estimation of Reactivity Margin from Fission Products and Minor Actinides in PWR Burnup Credit," ORNL/TM-2000/306, Oak Ridge National Laboratory, Oak Ridge, TN, October 2001.

NUREG/CR-6801, U.S. Nuclear Regulatory Commission, "Recommendations for Addressing Axial Burnup in PWR Burnup Credit Analyses," ORNL/TM-2001/273, Oak Ridge National Laboratory, Oak Ridge, TN, March 2003.

NUREG/CR-6811, U.S. Nuclear Regulatory Commission, "Strategies for Application of Isotopic Uncertainties in Burnup Credit," ORNL/TM-2001/257, Oak Ridge National Laboratory, Oak Ridge, TN, June 2003.

NUREG/CR-6835, U.S. Nuclear Regulatory Commission, "Effects of Fuel Failure on Criticality Safety and Radiation Dose for Spent Fuel Casks," ORNL/TM-2002/255, Oak Ridge National Laboratory, Oak Ridge, TN, September 2003.

NUREG/CR-6955, U.S. Nuclear Regulatory Commission, “Criticality Analysis of Assembly Misload in a PWR Burnup Credit Cask,” ORNL/TM-2004/52, Oak Ridge National Laboratory, Oak Ridge, TN, January 2008.

NUREG/CR-6979, U.S. Nuclear Regulatory Commission, “Evaluation of the French Haut Taux de Combustion (HTC) Critical Experiment Data,” ORNL/TM-2007/083, Oak Ridge National Laboratory, Oak Ridge, TN, September 2008.

NUREG/CR-6998, U.S. Nuclear Regulatory Commission, “Review of Information for Spent Nuclear Fuel Burnup Confirmation,” ORNL/TM-2007/229, Oak Ridge National Laboratory, Oak Ridge, TN, December 2009.

NUREG/CR-7108, U.S. Nuclear Regulatory Commission, “An Approach for Validating Actinide and Fission Product Burnup Credit Criticality Safety Analyses—Isotopic Composition Predictions,” ORNL/TM-2011/509, Oak Ridge National Laboratory, Oak Ridge, TN, April 2012.

NUREG/CR-7109, U.S. Nuclear Regulatory Commission, “An Approach for Validating Actinide and Fission Product Burnup Credit Criticality Safety Analyses—Criticality (k_{eff}) Predictions,” ORNL/TM-2011/514, Oak Ridge National Laboratory, Oak Ridge, TN, April 2012.

NUREG/CR-7194, U.S. Nuclear Regulatory Commission, “Technical Basis for Peak Reactivity Burnup Credit for BWR Spent Nuclear Fuel in Storage and Transportation Systems,” ORNL/TM-2014/240, Oak Ridge National Laboratory, Oak Ridge, TN, April 2015.

NUREG/CR-7203, U.S. Nuclear Regulatory Commission, “A Quantitative Impact Assessment of Hypothetical Spent Fuel Reconfiguration in Spent Fuel Storage Casks and Transportation Packages,” ORNL/TM-2013/92, Oak Ridge National Laboratory, Oak Ridge, TN, September 2015.

NUREG/CR-7205, “Bias Estimates Used in Lieu of Validation of Fission Products and Minor Actinides in MCNP K_{eff} Calculations for PWR Burnup Credit Casks,” ORNL/TM-2012/544, Oak Ridge National Laboratory, September 2015.

Oak Ridge National Laboratory, “SCALE: A Comprehensive Modeling and Simulation Suite for Nuclear Safety Analysis and Design,” ORNL/TM-2005/39, Version 6.1, June 2011. Available as CCC-785 from the Radiation Safety Information Computational Center at Oak Ridge National Laboratory, https://rsicc.ornl.gov/Catalog.aspx?c=CCC.

Regulatory Guide 3.71, “Nuclear Criticality Safety Standards for Fuels and Material Facilities,” U.S. Nuclear Regulatory Commission, Agencywide Documents Access and Management System Accession No. ML103210345.

RW-859, “Nuclear Fuel Data Survey,” U.S. Energy Information Administration, https://www.eia.gov/nuclear/spent_fuel/.

YAEC-1937, “Axial Burnup Profile Database for Pressurized Water Reactors,” Yankee Atomic Electric Company, May 1997. Available as Data Package DLC-201, PWR-AXBUPRO-SNL, from the Radiation Safety Information Computational Center at Oak Ridge National Laboratory, https://rsicc.ornl.gov/Catalog.aspx?c=DLC

ATTACHMENT 6A TECHNICAL RECOMMENDATIONS FOR THE CRITICALITY SAFETY REVIEW OF PRESSURIZED-WATER REACTOR SPENT NUCLEAR FUEL TRANSPORTATION PACKAGES AND STORAGE CASKS THAT USE BURNUP CREDIT

6A.1 Introduction

The overall reactivity decrease of nuclear fuel irradiated in light-water reactors occurs because of the combined effect of the net reduction of fissile nuclides and the production of parasitic neutron-absorbing nuclides (non-fissile actinides and fission products). Burnup credit refers to accounting for partial or full reduction of spent nuclear fuel (SNF) reactivity caused by irradiation. Section 6.4.7 of this standard review plan (SRP) provides guidance to the U.S. Nuclear Regulatory Commission (NRC) staff for use in reviewing commercial light-water reactor SNF package designs that seek burnup credit. This attachment provides the technical bases for the burnup-credit recommendations provided in the SRP and for SNF dry storage; thus, the attachment discusses both storage and transportation.

Historically, criticality safety analyses for transportation and dry cask storage of SNF assumed the fuel contents to be unirradiated ("fresh") fuel. In September 2002, the NRC Spent Fuel Project Office (SFPO) issued Interim Staff Guidance (ISG)-8, Revision 2, "Burnup Credit in the Criticality Safety Analyses of PWR Spent Fuel in Transport and Storage Casks," to provide recommendations for the use of actinide-only burnup credit (i.e., burnup credit using only major actinide nuclides) in storage and transport of pressurized-water reactor (PWR) SNF. Based on the data available for burnup-credit depletion and criticality computer code validation at the time ISG-8, Revision 2, was issued, SFPO staff recommended actinide-only credit. Additionally, the staff recommended that a measurement be performed to confirm the reactor record burnup value for SNF assemblies to be stored or transported in storage cask or package designs that credit burnup in the criticality analysis.

Since ISG-8, Revision 2, was issued, significant progress has been made in research on the technical and implementation aspects of burnup credit, with the support of the NRC Division of Spent Fuel Storage and Transportation (formerly SFPO), by the NRC Office of Nuclear Regulatory Research (RES), and its contractors at Oak Ridge National Laboratory (ORNL). This attachment summarizes the findings of a number of reports and papers published as part of the research program RES directed over the last several years. It is recommended that the staff read the referenced reports and papers to understand the detailed evaluation of specific burnup-credit parameters discussed in this attachment. A comprehensive bibliography of burnup-credit-related technical reports and papers is provided at http://www.ornl.gov/sci/nsed/rnsd/pubs_burnup.shtml.

6A.2 General Approach in Safety Analysis

Criticality safety analyses of SNF storage or transportation systems are complex in terms of both the computer modeling of the system and the required fuel information. The assumption of unirradiated fuel at maximum initial enrichment provides a straightforward approach for the criticality safety analysis of an SNF dry storage or transportation system. This is a conservative approach to criticality safety and limits the system capacity. In comparison to the fresh fuel assumption, criticality safety analyses for SNF systems that credit burnup require the following:

- additional information and assumptions for input to the analysis
- additional analyses to obtain the SNF compositions
- additional validation efforts for the depletion and decay software
- enhanced validation to address the additional nuclides in the criticality analyses
- verification that the fuel assembly to be loaded meets the minimum burnup requirements made before loading the system

The use of burnup credit for SNF storage casks and transportation packages provides for increased fuel capacities and higher limits on allowable initial enrichments for such systems. Applications for PWR SNF storage cask and transportation package certificates of compliance (CoCs) have generally shifted to high-capacity designs (i.e., 32 fuel assemblies or greater) in the past 15 years. To fit this many assemblies in a similarly sized SNF system, applicants have removed flux traps present in lower capacity designs (i.e., 24 fuel assemblies or less) and replaced them with single-neutron-absorber plates between assemblies. Flux traps consist of two neutron-absorber plates separated by a water region, with the water serving to slow neutrons for more effective absorption. Single-neutron-absorber plates are less effective absorbers than flux trap designs and result in a system that cannot be shown to be subcritical in unborated water without the use of some level of burnup credit.

An important outcome from a burnup credit criticality safety analysis is an SNF loading curve, showing the minimum burnup required for loading as a function of initial enrichment and cooling time. For a given system loading of SNF, the effective neutron multiplication factor (k_{eff}) will increase with higher initial enrichments, decrease with increases in burnup, and decrease with cooling time from 1 year to approximately 100 years. Information that should be considered in specifying the technical limits for fuel acceptable for loading includes fuel design, initial enrichment, burnup, cooling time, and the reactor conditions under which the fuel is irradiated. Thus, depending on the assumptions and approach used in the safety analysis and the limiting k_{eff} criterion, a loading curve or set of loading curves can be generated to define the boundaries between acceptable and unacceptable SNF specifications for system loading.

The recommendations in Section 6.4.7 of this SRP chapter include the following:

- general information on limits for the certification basis
- recommended assumptions regarding reactor operating conditions
- guidance on code validation with respect to the isotopic depletion evaluation
- guidance on code validation with respect to the k_{eff} evaluation
- guidance on preparation of loading curves and the process for assigning a burnup loading value to an assembly

A criticality safety analysis that uses burnup credit should consider each of these five areas.

The five recommendations listed above were developed with intact fuel as the basis. Extending the recommendations to fuel that is not intact may be warranted if the applicant can demonstrate

that any additional uncertainties associated with the irradiation history and structural integrity (both during and subsequent to irradiation) of the fuel assembly have been addressed. In particular, a model that bounds the uncertainties associated with the allowed fuel inventory and fuel configuration in the system should be applied. Such a model should include the selection of appropriate burnup distributions and any potential rearrangement of fuel that is not intact during normal and accident conditions. The applicant should also apply each of the recommendations in this review guidance and justify any exceptions taken because of the nature of the fuel (e.g., the use of an axial profile that is not consistent with the recommendation). Section 7.4.14 of this SRP provides guidance for classifying the condition of the fuel (e.g., damaged, intact) for SNF transportation.

The validation methods presented in Sections 4 and 5 of this attachment were performed for a representative storage cask/transportation package model, known as the generic burnup-credit cask (GBC)-32, described in NUREG/CR-6747, "Computational Benchmark for Estimation of Reactivity Margin from Fission Products and Minor Actinides in PWR Burnup Credit," issued October 2001. As this attachment will discuss later, to directly use bias and bias uncertainty numbers developed in NUREG/CR-7108, "An Approach for Validating Actinide and Fission Product Burnup Credit Criticality Safety Analyses—Isotopic Composition Predictions," issued April 2012, and NUREG/CR-7109, "An Approach for Validating Actinide and Fission Product Burnup Credit Criticality Safety Analyses—Criticality (k_{eff}) Predictions," issued April 2012, applicants must use the same isotopic depletion and criticality code and nuclear data as were used in the isotopic depletion and criticality validation performed in those reports. Additionally, applicants must demonstrate that their SNF storage or transportation system design is similar to the GBC-32 used to develop the validation methodologies in NUREG/CR-7108 and NUREG/CR-7109. This demonstration should consist of a comparison of system materials and geometry, including neutron-absorber material and dimensions, assembly spacing, and reflector materials and dimensions. This demonstration should also include a comparison of neutronic characteristics such as hydrogen-to-fissile atom ratios (H/X), energy of average neutron lethargy-causing fission (EALF), neutron spectra, and neutron reaction rates. Applicability of the validation methodology to systems with characteristics that deviate substantially from those for the GBC-32 should be justified. Sensitivity and uncertainty analysis tools, such as those provided in the SCALE code system, can provide a quantitative comparison of the GBC-32 to the application of interest.

The recommendations in this review guidance were developed with PWR fuel as the basis. Typically, dry storage and transportation applicants have not sought boiling-water reactor (BWR) burnup credit, because of the complexity of the fuel and irradiation parameters, the lack of code validation data to support burnup credit, and a general lack of need for such credit in existing designs. The NRC has initiated a research project to obtain the technical basis for BWR burnup credit. BWR fuel assemblies typically have neutron-absorbing material, typically gadolinium oxide (Gd_2O_3), mixed in with the uranium oxide of the fuel pellets in some rods. This neutron absorber depletes more rapidly than the fuel during the initial parts of its irradiation, which causes the fuel assembly reactivity to increase and reach a maximum value at an assembly-average burnup typically less than 20 gigawatt-days per metric ton of uranium (GWd/MTU). Then reactivity decreases for the remainder of fuel assembly irradiation. Criticality analyses of BWR SNF pools typically employ what are known as "peak reactivity" methods to account for this behavior. NUREG/CR-7194, "Technical Basis for Peak Reactivity Burnup Credit for BWR Spent Nuclear Fuel in Storage and Transportation Systems," issued April 2015, reviews several existing peak-reactivity methods and demonstrates that a conservative set of analysis conditions can be identified and implemented to allow criticality safety analysis of BWR SNF assemblies at

peak reactivity in storage and transportation systems. The reviewer should consult NUREG/CR-7194 if the applicant uses peak reactivity BWR burnup-credit methods in its criticality analysis.

This SRP does not address credit for BWR burnup beyond peak reactivity. An NRC research program is currently investigating methods for conservatively including such credit in a BWR criticality analysis for SNF storage systems and transportation packages, but at this time, the NRC does not recommend burnup credit beyond peak reactivity. The reviewer should consider conservative analyses of BWR burnup credit beyond peak reactivity on a case-by-case basis, consulting the latest research results in this area (i.e., NRC Letter Reports, NUREG/CRs).

The remainder of this attachment discusses recommendations in each of the five burnup-credit areas and provides technical information and references that should be considered in the review of the application.

6A.3 Limits for Certification/Licensing Basis (Section 6.4.7.1 of this SRP)

Available validation data support actinide-only and actinide and fission product burnup credit for uranium dioxide (UO_2) fuel, enriched up to 5.0 weight percent uranium-235, that is irradiated in a PWR to an assembly-average burnup value up to 60 GWd/MTU and cooled out of the reactor between 1 and 40 years.

Nuclides of Importance

Several studies have been performed to identify the nuclides that have the most significant effect on the calculated value of k_{eff} as a function of burnup and cooling time. These results are summarized in NUREG/CR-6665, "Review and Prioritization of Technical Issues Related to Burnup Credit for LWR Fuel," issued February 2000. This report concludes that the actinides and fission products listed in Tables 6A-1 and 6A-2 are candidates for inclusion in burnup-credit analyses for storage and transportation systems, based on their relative reactivity worth at the cooling times of interest.

The relative reactivity worth of the nuclides will vary somewhat with fuel design, initial enrichment, and cooling time, but the important nuclides (fissile nuclides and select nonfissile absorbers) remain the same and have been substantiated by many independent studies. These nuclides have the largest impact on k_{eff}, and there is a sufficient quantity of applicable experimental data available for validation of the analysis methods, as Sections 5 and 6 of this attachment discuss. Accurate prediction of the concentrations for the nuclides in Tables 6A-1 and 6A-2 requires that the depletion and decay calculations include nuclides beyond those listed in the tables. Additional actinides and fission products are needed to ensure that the transmutation chains and decay chains are accurately handled. Methods are also needed to accurately simulate the influence of the fission product compositions on the neutron spectrum, which in turn impacts the burnup-dependent cross sections. To accurately predict the reactivity effect of fission products, explicit representation of the important fission product transmutation and decay chains is needed to obtain the individual fission product compositions.

Applicants attempting to credit neutron-absorbing isotopes other than those listed in these tables should ensure that such isotopes are nonvolatile, nongaseous, and relatively stable and should provide analyses to determine the additional depletion and criticality code bias and bias uncertainty associated with these isotopes. These analyses should be accompanied by additional relevant critical experiment and radiochemical assay (RCA) data, to the extent practicable, or include sufficient penalties to account for the lack of such data.

Table 6A-1 Recommended set of nuclides for actinide-only burnup credit		
^{234}U	^{235}U	^{238}U
^{238}Pu	^{239}Pu	^{240}Pu
^{241}Pu	^{242}Pu	^{241}Am

Table 6A-2 Recommended set of additional nuclides for actinide and fission product burnup credit			
^{95}Mo	^{99}Tc	^{101}Ru	^{103}Rh
^{109}Ag	^{133}Cs	^{147}Sm	^{149}Sm
^{150}Sm	^{151}Sm	^{152}Sm	^{143}Nd
^{145}Nd	^{151}Eu	^{153}Eu	^{155}Gd
^{236}U	^{243}Am	^{237}Np	

Burnup and Enrichment Limits

NUREG/CR-7108 demonstrates that the range of existing RCA data that are readily available for validation extends up to 60 GWd/MTU and 4.657 weight percent uranium-235 initial enrichment. Though limited RCA data are available above 50 GWd/MTU, it is the staff's judgement that credit can reasonably be extended up to 60 GWd/MTU. Credit should not be extended to assembly-average burnups beyond this level, though local burnups can be higher. Fuel with an assembly-average burnup greater than 60 GWd/MTU can be loaded into a burnup-credit system, but credit should be taken only for the reactivity reduction up to 60 GWd/MTU. Additionally, while the enrichment range covered by the available assay data has increased, it has not increased enough to warrant a change in the maximum initial enrichment that can be considered in a burnup credit analysis; thus, the initial enrichment limit for the licensing or certification basis remains at 5.0 weight percent uranium-235.

Cooling Time

Figure 6A-1 illustrates the expected reactivity behavior for SNF in a hypothetical GBC-32 system for an analysis using major actinide concentrations and various actinide and fission product concentrations in the calculation of k_{eff}. Reactivity begins to rise around 100 years after discharge, which means the timeframe for interim SNF storage should be considered in the evaluation of acceptable cooling times. The curve indicates that the reactivity of the fuel at 40 years is about the same as that of fuel cooled to 200 years. The Commission has instructed staff to review the regulatory programs for SNF storage and transportation, considering extended storage beyond 120 years (NRC 2010). In light of the increasingly likely scenario of extended dry storage of SNF, the CoC for an SNF transportation package or the CoC or license for dry storage may require an additional condition for the applicability of the credited burnup of the SNF contents. The condition would depend on the type of credit taken and the post-irradiation decay time credited in the analysis. For example, crediting 40 years would result in a CoC condition limiting the applicability of the credited burnup to 160 years after fuel discharge. Approval of a cooling time longer than 5 years for burnup credit in dry storage or transportation systems does not automatically guarantee acceptance for disposal without repackaging. NUREG/CR-6781, "Recommendations on the Credit for Cooling Time in PWR Burnup Credit Analyses," issued January 2003, provides a comprehensive study of the effect of cooling time on burnup credit for various package designs and SNF compositions.

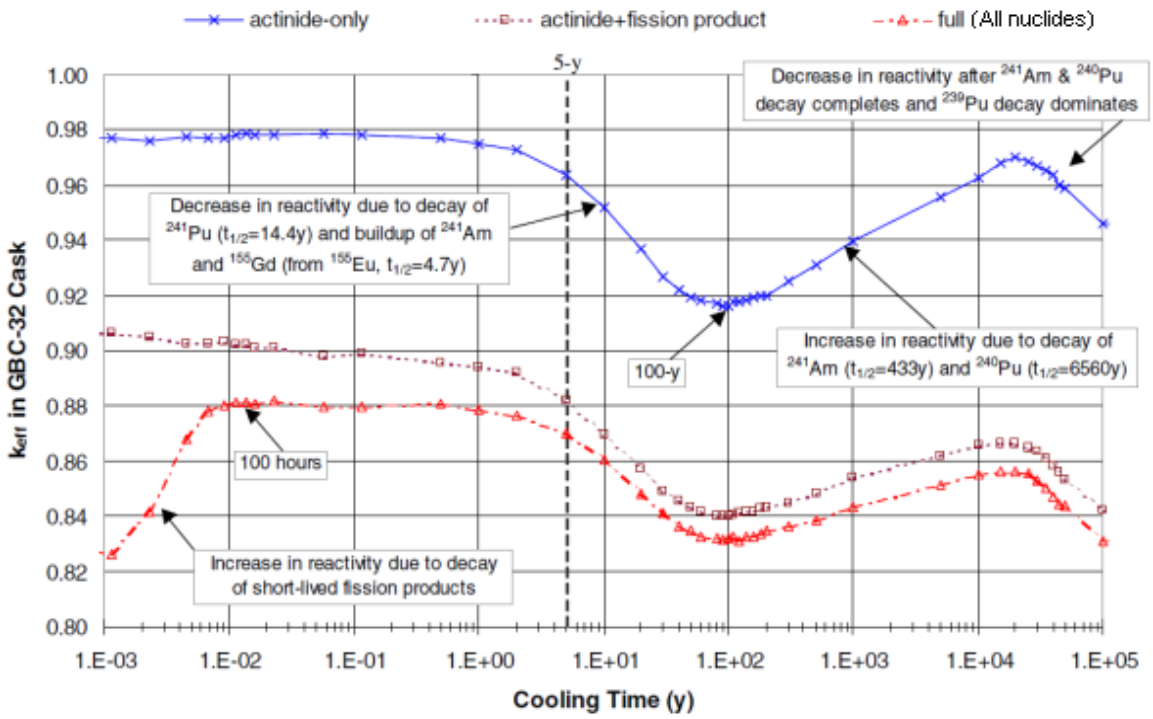

Figure 6A-1 Reactivity behavior in the GBC-32 cask as a function of cooling time for fuel with 4.0 weight percent uranium-235 initial enrichment and 40 Gwd/MTU burnup (Source: NRC 2010)

Summary

The acceptance criteria for burnup credit are based on the characteristics of SNF discharged to date, the parameter ranges considered in most technical investigations, and the experimental data available to support development of a calculational bias and bias uncertainty. As indicated, a safety analysis that uses parameter values outside those recommended by the SRP should (i) demonstrate that the measurement or experimental data necessary for proper code validation have been included and (ii) provide adequate justification that the analysis assumptions or the associated bias and bias uncertainty have been established in a way that bounds the potential impacts of limited measurement or experimental data. Even within the recommended range of parameter values, the reviewer should exercise care in assessing whether the analytic methods and assumptions used are appropriate, especially near the ends of the range.

6A.4 Model Assumptions (Section 6.4.7.2 of this SRP)

The actinide and fission product compositions used to determine a value of k_{eff} should be calculated using fuel design and reactor operating parameter values that encompass the range of design and operating conditions for the proposed contents. The proposed contents may consist of the entire population of discharged PWR fuel assemblies, a specific design of PWR fuel assembly [e.g., W17x17 optimized fuel assembly (OFA)], or a smaller, specific population from a particular site. The k_{eff} value should be calculated using package models, analysis assumptions, and code inputs that allow accurate representation of the physics in the system. The following discusses important parameters that should be addressed in depletion analyses and k_{eff} calculations in a burnup-credit evaluation.

Reactor Operating History and Parameter Values

Section 4.2 of NUREG/CR-6665 discusses the impacts of fuel temperature, moderator temperature and density, soluble boron concentration, specific power and operating history, and burnable absorbers on the k_{eff} of SNF in a storage cask or transportation package.

As the assumed fuel temperature used in the depletion model increases, the k_{eff} for the SNF in the storage cask or package will increase. The k_{eff} will also increase with increases in either moderator temperature (lower density) or the soluble boron concentration. Analyses for both actinide-only and actinide-plus-fission product evaluations exhibit these trends in k_{eff}. Figures 6A-2 to 6A-4 provide examples of the Δk impact seen from differences in fuel temperature, moderator temperature, and soluble boron concentration. The system modeled to determine these results was an infinite array of storage cells, but similar results have been confirmed for finite, reflected systems. All of these increases are the result of the parameter increase causing increased production of fissile plutonium nuclides and decreased uranium-235 utilization.

Specific power and operating history have a much more complex impact but a very small effect on the storage cask or package k_{eff} value. Figures 6A-5 and 6A-6 show the variation of k_{inf} with specific power for various initial enrichment and burnup combinations, for actinide-only and actinide-plus-fission product burnup credit, respectively. Irradiation at higher specific power results in a slightly higher k_{eff} for actinide-only burnup credit, but the reverse is true for burnup credit that includes actinides and fission products (see Section 3.4.2.3 of DeHart 1996). Although the specific power at the end of irradiation is most important, the assumption of constant full power is more straightforward and acceptable, while having minimal impact on the k_{eff} value relative to other assumptions.

NUREG/CR-6665 and DeHart (1996) provide more detailed information on the impact of each parameter or phenomenon that should be assumed in the depletion model. Independent studies have substantiated each of the trends and impacts. However, to model the irradiation of the fuel to produce bounding values for k_{eff} consistent with realistic reactor operating conditions, information is needed on the range of actual reactor conditions for the proposed SNF to be loaded in a package. Loading limitations tied to the actual operating conditions will be needed unless the operating condition values assumed in the model can be justified as those that produce the maximum k_{eff} values for the anticipated SNF package contents. As illustrated by the case of specific power and operating history, the bounding conditions and appropriate limitations may differ for actinide-only burnup credit versus actinide-plus-fission-product burnup credit, since the parameter impact may trend differently for these two types of burnup credit. The sensitivity to variations in the depletion parameter assumptions differs for the two types of burnup credit, with actinide-plus-fission-product burnup credit analyses exhibiting greater sensitivity for some parameters (see NUREG/CR-6800, “Assessment of Reactivity Margins and Loading Curves for PWR Burnup-Credit Cask Designs,” issued March 2003).

Also, the most reactive fuel design before irradiation will not necessarily have the highest reactivity after discharge from the reactor, and the most reactive fuel design may differ at various burnup levels. Thus, if various fuel designs are to be allowed in a particular package design, parametric studies should be performed to demonstrate the most reactive SNF design for the range of burnup and enrichments considered in the safety analysis. Another option is to provide loading curves for each fuel assembly design and allow only one assembly type in each package loading.

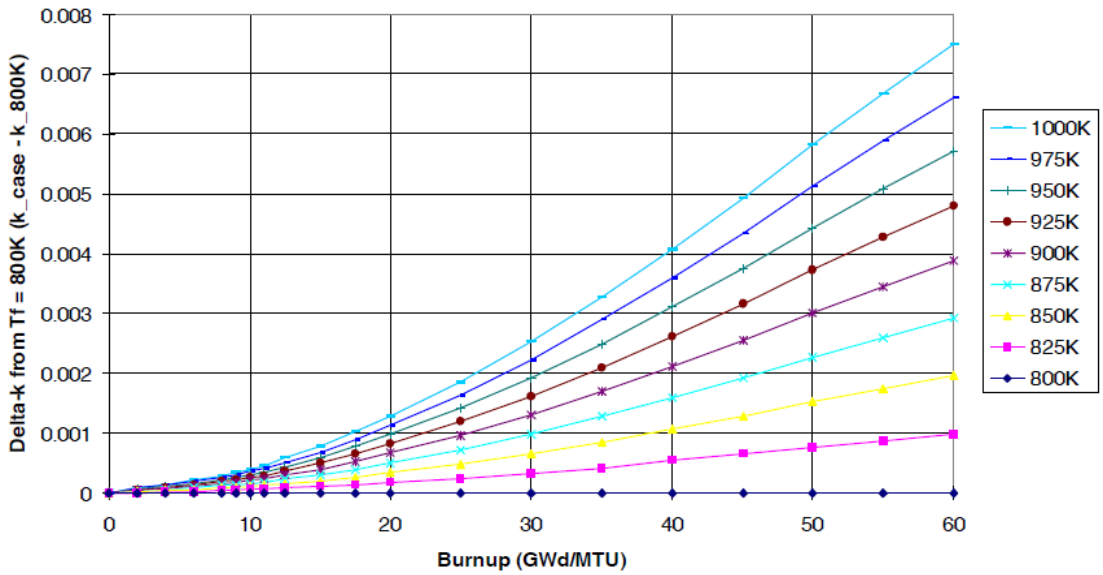

Figure 6A-2 Reactivity effect of fuel temperature during depletion on K_{inf} in an array of poisoned storage cells; results correspond to fuel with 5.0 weight percent initial uranium-235 enrichment (Source: Withee 2002)

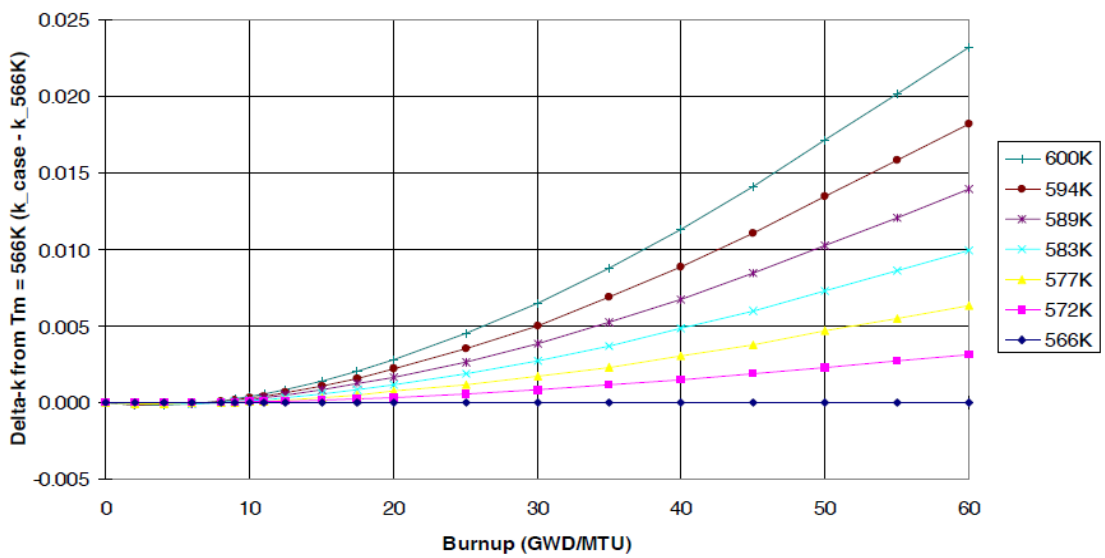

Figure 6A-3 Reactivity effect of moderator temperature during depletion on K_{inf} in an array of poisoned storage cells; results correspond to fuel with 5.0 weight percent initial uranium-235 enrichment (Source: Withee 2002)

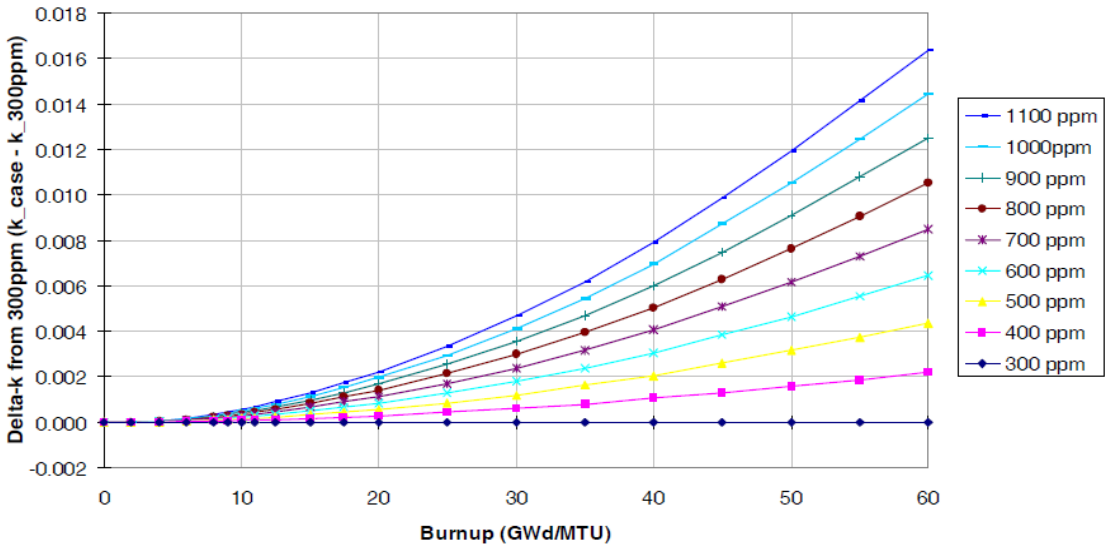

Figure 6A-4 Reactivity effect of soluble boron concentration during depletion on K_{inf} in an array of poisoned storage cells; results correspond to fuel with 5.0 weight percent initial uranium-235 enrichment (Source: Withee 2002)

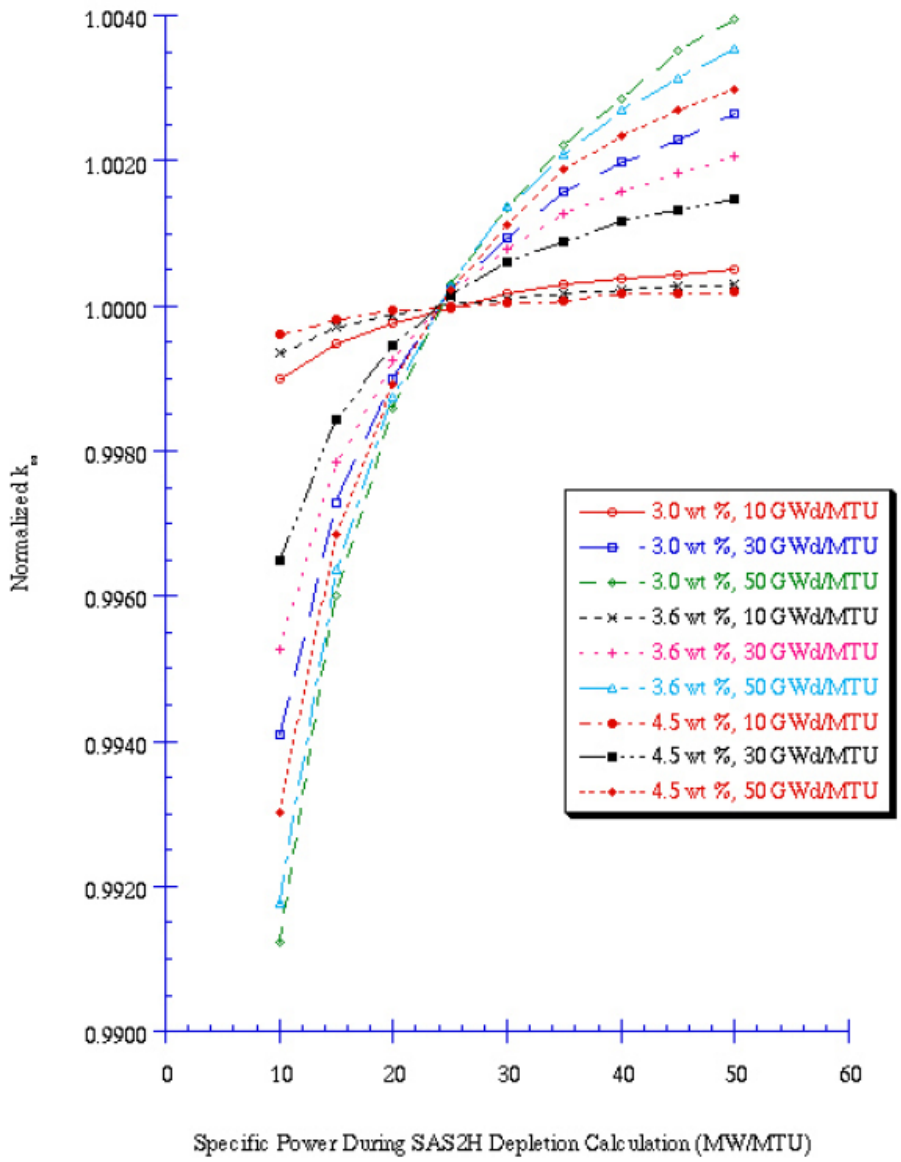

Figure 6A-5 Reactivity effect of specific power during depletion on K_{inf} in an array of fuel pins (actinides only) (Source: Dehart 1996)

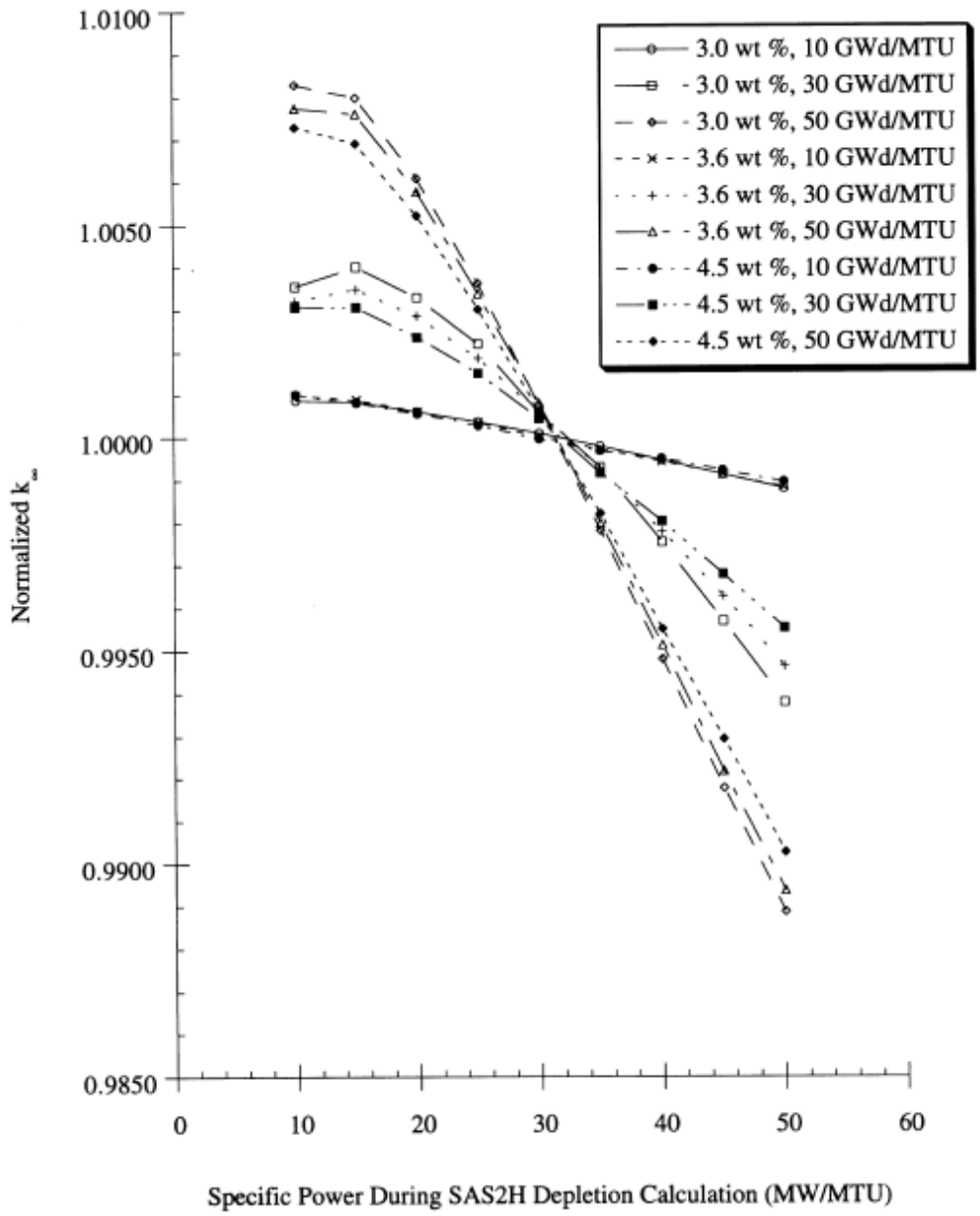

Figure 6A-6 Reactivity effect of specific power during depletion on K_{inf} in an array of fuel pins (actinides and fission products) (Source: Dehart 1996)

Horizontal Burnup Profiles

Consideration of pin-by-pin burnups (and associated variations in SNF composition) does not appear to be necessary for analysis of the integral k_{eff} value in a SNF storage cask or package. To date, PWR cores have been managed such that the vast majority of assemblies experience a generally uniform burnup horizontally across the assembly during an operating cycle. However, assemblies on the periphery of the core may have a significant variation in horizontal burnup after a cycle of operation (see DOE/RW-0496, "Horizontal Burnup Gradient Datafile for PWR Assemblies," issued May 1997). In large storage casks or rail packages, the probability that underburned quadrants of multiple fuel assemblies will be oriented in such a way as to have a substantial impact on k_{eff} is not expected to be significant. However, for smaller systems, the

effect can be significant. The safety evaluation should address the impact of horizontal burnup gradients (such as found in DOE/RW-0496) on their package design or demonstrate that the assemblies to be loaded in the package will be verified to not have such gradients. One acceptable approach would be to determine the difference in k_{eff} for a package loaded with fuel having a horizontal burnup gradient and a package loaded with the same fuel having a uniform horizontal burnup (i.e., no gradient). The fuel with the gradient would be arranged so as to maximize the reactivity effect of the gradient. The reactivity difference between the two cases could then be applied to the remaining analyses.

Axial Burnup Profiles

Considerable attention should be paid to the axial burnup profile(s) selected for use in the safety evaluation. A uniform axial profile is generally bounding at low burnups but is increasingly nonconservative at higher burnups because of the increasing relative worth of the fuel ends, as demonstrated in NUREG/CR-6801, "Recommendations for Addressing Axial Burnup in PWR Burnup Credit Analyses," issued March 2003. Figure 6A-7 illustrates an example of this phenomenon for an actinide-only burnup credit analysis. As the figure shows, a uniform axial profile was conservative for that analysis at burnups less than about 20 GWd/MTU, but nonconservative at higher burnups. The burnup range at which this transition occurs will vary with fuel design and the type of burnup credit.

Section 6.4.7.2 of this SRP and this attachment indicate that any analysis should provide an "accurate representation of the physics" in the system (i.e., the package, including package arrays). Thus, the applicant should select and model the axial burnup profile(s) in the analyses (including an appropriate number of axial material zones) that encompass the proposed contents and their range of potential k_{eff} values. The applicant should account for variance of the axial effect with burnup, cooling time, SNF nuclides used in the prediction of k_{eff}, and package design. The reviewer should consider the range of profiles anticipated for the fuel to be loaded in the package.

The publicly available database of axial profiles in YAEC-1937, "Axial Burnup Profile Database for Pressurized Water Reactors," issued May 1997, is recommended as an appropriate source for selecting axial burnup profiles that will encompass the SNF anticipated for loading in a burnup credit package. While the database represents only 4 percent of the assemblies discharged through 1994, NUREG/CR-6801 indicates that it provides a representative sampling of discharged assemblies. This conclusion is reached on the basis of fuel vendor/reactor design, types of operation (i.e., first cycles, out-in fuel management, and low-leakage fuel management), burnup and enrichment ranges, use of burnable absorbers (including different absorber types), and exposure to control rods (CRs) [including axial power shaping rods (APSRs)]. NUREG/CR-6801 also indicates that while the database has limited data for burnup values greater than 40 GWd/MTU and initial enrichments greater than 4.0 weight percent uranium-235, there is a high probability that the profiles resulting in the highest reactivity at intermediate burnup values will yield the highest reactivity at higher burnups. Thus, the existing database should be adequate for burnups beyond 40 GWd/MTU and initial enrichments above 4.0 weight percent uranium-235 if profiles are selected that include a margin for the potential added uncertainty in moving to the higher burnups and initial enrichments allowed in Section 6.4.7.1 of this SRP chapter and Section 3 of this attachment. Given the limited nature of the database, NUREG/CR-6801 includes an evaluation of the database's limiting profiles and the impacts of loading significantly more reactive assemblies in the place of assemblies with limiting profiles. NUREG/CR-6801 concludes that, based on the low consequence of the more

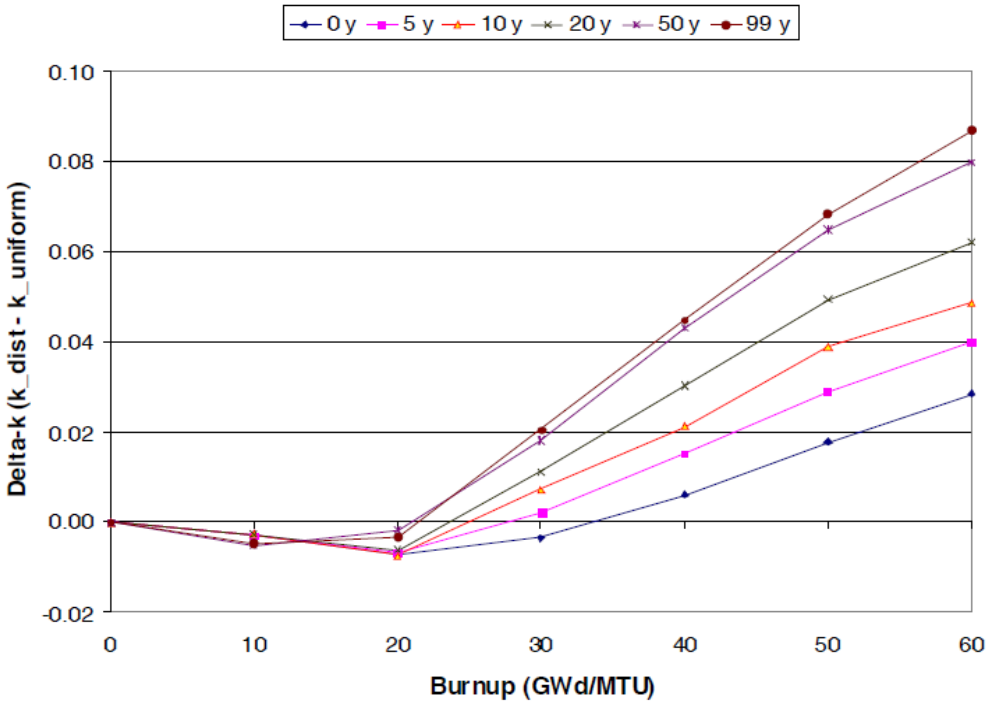

Figure 6A-7 Effect of axial burnup distribution on K_{eff} in the GBC-32 for actinide-only burnup credit and various cooling times for fuel with 4.0 weight percent initial enrichment (Source: Withee 2002)

reactive profiles, the nature of the database's limiting profiles, and their application to all assemblies in a storage cask or package, the database is adequate for obtaining bounding profiles for use in burnup credit analyses.

While the preceding discussion indicates that the database is an appropriate source of axial burnup profiles, the reviewer should ensure that profiles taken from the database are applied correctly. The application of the profiles in the database may not be appropriate for all assembly designs. This would include assemblies of different lengths than those evaluated in the database. While the database included some assemblies with axial blankets (natural or low enriched), these assemblies were not irradiated in a fully blanketed core (i.e., they were test assemblies). Thus, application of the database profiles to assemblies with axial blankets may also be inappropriate, as the impact of axial blankets has not been fully explored. However, it is generally conservative to assume that fuel is not blanketed, using the enrichment of the nonblanketed axial zone and the limiting axial profile.

Other sources of axial burnup profiles may be appropriate to replace or supplement the database of YAEC-1937. The reviewer should ensure that these other burnup profile sources are described and evaluated, similar to the treatment of the YAEC-1937 database in NUREG/CR-6801. The reviewer should ensure that the process used to obtain axial profiles included in the safety analysis has been described and that the profiles are justified as encompassing the realistic profiles for the entire burnup range over which they are applied. The process of selecting and justifying the appropriate bounding axial profile may be simplified and/or conservatism may be reduced if the axial burnup profile is measured before or during the package loading operation. The measurement should demonstrate that the actual assembly profile is equally or less reactive than that assumed in the safety evaluation.

Burnable Absorbers

Assemblies exposed to fixed neutron absorbers [also referred to as integral burnable absorbers (IBAs)] and removable neutron absorbers [also referred to as burnable poison rod assemblies (BPRs)] can have higher k_{eff} values than assemblies that are not exposed. This is because of the hardening of the neutron spectrum, and it will lead to increased fissile plutonium nuclide production and reduced uranium-235 depletion. In addition, when removable neutron absorbers are inserted, the spectrum is further hardened because of the displacement of the moderator. NUREG/CR-6761, "Parametric Study of the Effect of Burnable Poison Rods for PWR Burnup Credit," issued March 2002, and NUREG/CR-6760, "Study of the Effect of Integral Burnable Absorbers on PWR Burnup Credit," issued March 2002, characterize the effects of burnable absorbers on SNF. The results of these studies indicate that a depletion analysis with a maximum realistic loading of BPRs (i.e., maximum neutron poison loading) and maximum realistic burnup for the exposure should provide an adequate bounding safety basis for fuel with or without BPRs. An evaluation relying on exposures to less than the maximum BPR loading or for less than the maximum burnup (for which credit is requested), or both, needs adequate justification for the selected values (e.g., provision of available data to support the value selection and/or indication of how administrative controls will prevent a misload of an assembly with higher exposure).

For IBAs, these studies indicate that the impact on k_{eff} depends on the material type and the burnup level. Exposure to the maximum absorber loading was seen to be bounding for zirconium diboride-type IBAs (known as integral fuel burnable absorbers) at burnups above about 30 GWd/MTU. At lower burnups, neglecting the presence of the absorber was seen to be bounding. Neglecting the absorber in the case of IBAs that use erbia, gadolinia, and alumina-boron carbide was also bounding for all burnups investigated for these IBAs. Exposures to absorber types or materials not considered in the references supporting this appendix, whether fixed, removable, or a combination of the two, should be evaluated on a case-by-case basis.

Control Rods

As with BPRs, CRs fully or partially inserted during reactor operation can harden the spectrum near the insertion and lead to increased production of fissile plutonium nuclides. In addition, CRs can alter the axial burnup profile. In either case, the CR would have to be inserted for a significant fraction of the total irradiation time for these effects to be seen in terms of a positive Δk on the SNF package. Domestic PWRs typically do not operate with CRs inserted, although the tips of the rods may rest right at the fuel ends. However, some older domestic reactors and certain foreign reactors may have used CRs more extensively, such that the impact of CR insertion would be significant.

Based on the results of NUREG/CR-6759, "Parametric Study of the Effect of Control Rods for PWR Burnup Credit," issued February 2002, and the fact that BPRs and CRs cannot be inserted in an assembly at the same time, the inclusion of BPRs in the assembly irradiation model should adequately account for the potential increase in k_{eff} that may occur for typical SNF exposures to CRs during irradiation. However, inclusion of BPRs in the irradiation model may not fully account for exposures to atypical CR insertions (e.g., full insertion for one full reactor operation cycle), and assemblies irradiated under such operational conditions should be explicitly evaluated. Also, since the previously discussed axial burnup profile database (NUREG/CR-6800) includes a representative sampling of assemblies exposed to CRs and APSRs, the appropriate selection of a limiting axial profile(s) from that database would be

expected to adequately encompass the potential impact for axial profile distortion caused by CRs and APSRs.

Exposures to CR or APSR insertions or materials not considered in the references supporting this attachment should be explicitly evaluated. This would also apply to exposures to flux suppressors (e.g., hafnium suppressor inserts) or similar hardware that affects reactivity. Safety analyses for exposures to these items should use assumptions (e.g., duration of exposure, cycle(s) of exposure) that provide an adequate bounding safety basis and include appropriate justification for those assumptions. Additionally, the axial burnup and power distributions in assemblies exposed to these devices may be unusual; thus, it may be necessary to use actual axial burnup shapes for those assemblies.

Depletion Analysis Computational Model

For depletion analyses, computer codes that can track a large number of nuclides should be used to estimate the SNF nuclide concentration. Although certain nuclides that are typically tracked may not directly affect the concentrations of the nuclides in Tables 6A-1 and 6A-2, they can indirectly impact the production and depletion via their effect on the neutron spectrum. An accurate depletion analysis model requires tracking of a sufficient number of nuclides, use of accurate nuclear data, and prediction of burnup-dependent cross sections representative of the spatial region of interest.

Two-dimensional codes are routinely used together with axial segmentation of the fuel assembly in the criticality model to approximate axial variation in depletion. The two-dimensional flux calculations can capture the planar neutron flux distribution in each axial segment of a fuel assembly. The two-dimensional model is built to calculate the isotopic composition of the assembly at a series of burnup values, derived from the chosen axial burnup profile and the assembly-average burnup. This approach is acceptable because it accounts for both the planar and axial flux variation to achieve a relatively accurate depletion simulation. Ideally, three-dimensional computer codes would be useful for fuel assembly depletion analyses to accurately simulate this phenomenon. However, three-dimensional depletion analysis codes are not recommended at this time because of their current limitations.

Several two-dimensional codes based on neutron transport theory are available, such as CASMO, HELIOS, and the SCALE TRITON sequence (DeHart 2009). The reviewer should be aware of the limitations of a particular code and version, such as those designed to use lumped cross sections for multiple nuclides. Such limitations may require additional justification of the code's utility for burnup credit criticality analyses. Review of depletion analyses should focus on the suitability and accuracy of the code and modeling of the fuel assembly depletion history.

Previously, because of the limited availability of accurate two-dimensional computer codes, most burnup credit calculations used one-dimensional depletion codes to determine SNF isotopic concentrations averaged over the assembly. With appropriate code benchmarking against assay measurements and appropriate treatment of the fuel assembly spatial heterogeneity [e.g., Dancoff factor correction, disadvantage factor correction (Duderstadt and Hamilton 1976)], one-dimensional physics models of PWR assembly designs can produce sufficiently accurate assembly-average SNF compositions. However, to use a one-dimensional model, a cylindrical flux-weighted and geometry-equivalent supercell depletion model needs to be constructed to preserve the effective fuel assembly neutronics characteristics. Burnup-dependent cross sections are then generated using the flux-weighted and geometry-modified point-depletion model. This approach is sensitive to the accurate construction of the supercell materials and the approximation of the assembly geometry.

It is essential that the burnup-dependent cross sections are updated with sufficient frequency in the depletion analysis model and that the physics model used to update the cross sections is representative of the assembly design and reactor operating history. As with analyses used to determine k_{eff}, the depletion analysis should be appropriately validated. The application analysis should use the same code and cross-section library and the same, or similar, modeling options as were used in the depletion-validation analysis. Section 6A.5 of this attachment discusses in greater detail the issues associated with isotopic depletion-code validation.

Models for Prediction of k_{eff}

In addition to this SRP, the following documents address the expectations regarding the codes and modeling assumptions to be used to determine k_{eff} of an SNF transportation package:

- NUREG/CR-5661, "Recommendations for Preparing the Criticality Safety Evaluation of Transportation Packages," issued April 1997
- NUREG/CR-6361, "Criticality Benchmark Guide for Light-Water-Reactor Fuel in Transportation and Storage Packages," issued March 1997

Such applications typically require Monte Carlo codes capable of three-dimensional solutions of the neutron transport equation. A loading of SNF, including specific combinations of assembly-average burnup, initial enrichment, and cooling time, should be used for each package analysis. However, unlike unirradiated fuel, the variability of the burnup (and thus the isotopic concentrations) along the axial length is an important input assumption.

In particular, the burnup gradient will be large at the ends of the fuel regions. Thus, the package model should include several fuel zones, each with isotopic concentrations representative of the average burnup across the zone. Burnup profile information from reactor operations is typically limited to 18–24 uniform axial regions. NUREG/CR-6801 has shown that subdividing the zones beyond those provided in the profile information (assuming at least 18 uniform axial zones) yields insignificant changes in the k_{eff} value for a storage cask or package.

In reality, the end regions of the fuel have the lowest burnup and contribute the most to the reactivity of the system. Thus, the model boundary condition at the ends of the fuel will potentially be of greater importance than for uniform or fresh fuel cases where the reactivity in the center of the fuel dominates reactivity. The end-fitting regions above and below the fuel contain steel hardware with a significant quantity of void space (typically 50 percent or more) for potential water inleakage. The analyses in Appendix A to NUREG/CR-6801 demonstrate that modeling the end regions as either 100-percent steel or full-density water provides a higher value of k_{eff} than a combination (homogenized mixture 50-percent water and 50-percent steel assumed) of the two. For the storage cask or package that was studied, the all-steel reflector provided a k_{eff} change of nearly 1 percent over that of full-density water. Although use of 100-percent steel is an extreme boundary condition (since water will always be present to some degree), the results indicate that the applicant should take care to select a conservative boundary condition for the end regions of the fuel.

The large source of fissions distributed nonuniformly, because of the axial burnup profile, over a large source volume in an SNF package, can cause difficulty in properly converging the analysis to the correct k_{eff} value. Problems performed in an international code-comparison study (Blomquist et al. 2006) demonstrate that results can vary based on user selection of input parameters crucial to proper convergence. Strategies that may be used in the calculations to

accelerate the source convergence (e.g., starting particles preferentially at the more reactive end regions) should be justified and demonstrated to be effective.

An important issue in burnup credit criticality modeling is the need to verify that the correct SNF composition associated with the depletion and decay analysis is inserted in the correct spatial zone in the package model. The data-processing method to select and extract the desired nuclide concentrations from the depletion and decay analyses and input them correctly to the various spatial zones of the criticality analysis is not a trivial process and has the potential for error. The reviewer should verify the interface process, the computer code used to automate the data handling, or both. As with fresh fuel criticality analyses, the reviewer should verify that the criticality analyses for burnup credit are appropriately validated. In other words, the application analysis should use the same code and cross-section library and the same, or similar, modeling options as were used in the criticality-code validation. Section 6A.6 of this attachment discusses in greater detail the issues associated with criticality-code validation.

6A.5 Code Validation—Isotopic Depletion (Section 6.4.7.3 of this SRP)

An isotopic-depletion code typically consists of three parts:

1. a library of nuclear reaction cross sections

2. a geometric and material representation of the fuel assembly as well as the reactor core configuration

3. an algorithm to predict the isotopic transmutation over time as the fuel assembly is irradiated in the reactor and decays after discharge

To ensure the accuracy of the code and identify the biases and uncertainties associated with the algorithm, nuclear data, and modeling capability, the depletion code should be validated against measured data from RCA measurements of SNF samples.

Validation of the depletion-analysis code serves two purposes. The first purpose is to determine if the code is capable of accurately modeling the depletion environment of fuel assemblies for which burnup credit is taken. The second is to quantify the bias and bias uncertainty of the depletion code against the depletion parameters, fuel assembly design characteristics, initial enrichment, and cooling time.

In general, validation of the depletion code consists of the following steps:

1. Select RCA sample data sets that are suitable for validation of the depletion code.

2. Build and run depletion models for SNF samples that are selected for depletion-code validation.

3. Apply the bias and bias uncertainty of the depletion calculation to the criticality-analysis code implicitly through the use of adjusted isotopic concentrations of the depletion model, or determine the bias and bias uncertainties associated with the fuel-depletion-analysis code in terms of Δk_{eff}, as discussed in NUREG/CR-7108.

Selection of Validation Data

Validation data consist of measurements of isotopic concentrations from destructive RCA samples of SNF. Reliable depletion-code validation results require a sufficient number of data sets that include all isotopes for which burnup credit is taken. The applicant, therefore, should provide justification of the sample size for each nuclide. For example, the applicant should demonstrate that isotopic uncertainty is appropriately increased to account for uncertainty associated with limited available measurement data or for uncertainty associated with nonnormal isotopic validation data. The analyses in NUREG/CR-7108 use appropriate methods to account for these uncertainties.

Sample data necessary for depletion-code validation include initial enrichment and burnup, depletion history, assembly design characteristics, and physical location within the assembly. Over the past several decades, different laboratories have performed various RCA measurements of SNF samples. The NRC and ORNL have published detailed descriptions and analyses of the RCA measurements available for use in isotopic-depletion validation in the following references:

- NUREG/CR-7012, "Uncertainties in Predicted Isotopic Compositions for High Burnup PWR Spent Nuclear Fuel," issued January 2011
- NUREG/CR-7013, "Analysis of Experimental Data for High-Burnup PWR Spent Fuel Isotopic Validation—Vandellós II Reactor I," issued January 2011
- NUREG/CR-6968, "Analysis of Experimental Data for High Burnup PWR Spent Fuel Isotopic Validation—Calvert Cliffs, Takahama, and Three Mile Island Reactors," issued February 2010
- NUREG/CR-6969, "Analysis of Experimental Data for High Burnup PWR Spent Fuel Isotopic Validation—ARIANE and REBUS Programs (UO_2 Fuel)," issued February 2010

NUREG/CR-7108 analyzes the available data sets and identifies 100 fuel samples suitable for depletion-code validation for SNF storage and transportation systems. The reviewer should examine the sample data and depletion models to ensure that these sample data are used in the application to determine the bias and bias uncertainty associated with the chosen isotopic-depletion methodology. If different RCA data are used for the isotopic-depletion validation, the applicant should provide all relevant information associated with that data (e.g., burnup, enrichment, cool time, local irradiation environment), and justify that these data are appropriate for the intended purpose. RCA data from samples with incomplete or unknown physical and irradiation history data should be avoided. Note that the burnup values associated with the RCA measurements are the actual sample burnup rather than fuel assembly-average burnup, which is typically used in burnup credit calculations. Reviewers should ensure that the benchmark models the applicant constructed for depletion-code validation use the appropriate burnup value.

Because of differences in the techniques used in RCA measurement programs, in some cases, the results may vary significantly between different measurements of the same nuclide. These variations may result in a large uncertainty in the calculated concentration for a particular nuclide, and reviewers should expect to see such large uncertainties for certain nuclides until a better database of measurements is available.

Radiochemical Assay Modeling

The depletion-validation analysis should use the time-dependent irradiation environment and decay time for each individual RCA sample. Accurate sample depletion parameters should be used in the depletion-code validation analysis models. A sample should not be used if its depletion history and environment are not well known. Some samples were taken from specific locations in the fuel assembly, while other samples have been taken on an assembly-average basis. The latter type is typically found in earlier RCA data.

A depletion model should be built for each set of measurement data obtained from an RCA sample. To validate the computer code and obtain the bias and bias uncertainty, the depletion model should be able to accurately represent the environment in which each SNF sample was irradiated. For example, a sample from a fuel rod near a water hole will have a different neutron flux spectrum than a sample in a location where it is surrounded by fuel rods. Similarly, a fuel assembly with BPR insertion will have a different neutron spectrum in comparison to one without BPR exposure. Furthermore, a sample taken from the end of a fuel rod would have different specific power, fuel temperature, moderator temperature, and moderator density compared to those of a sample taken from the middle of a fuel assembly. Finally, time-dependent, three-dimensional effects, such as CR insertion, BPR insertions, and partial rod or gray rod insertions during part of the depletion processes, should also be captured. These local effects are typically averaged in a one-dimensional depletion code, and the reviewer should expect to see relatively large uncertainties associated with one-dimensional depletion-code calculations of individual RCA sample nuclide concentrations if this methodology is utilized.

Depletion-Code Validation Methods

One of the objectives of code validation is to determine the bias and bias uncertainty associated with the isotopic-concentration calculations. NUREG/CR-6811, “Strategies for Application of Isotopic Uncertainties in Burnup Credit,” issued June 2003, discusses several approaches to treating the bias and bias uncertainty associated with isotopic-concentration calculations. NUREG/CR-7108 expands on two of these approaches in greater detail and provides reference results for representative SNF storage and transportation systems. The following paragraphs discuss these approaches.

Isotopic Correction Factor Method

This approach uses a set of correction factors for isotopes that are included in burnup credit analyses. Correction factors are derived by statistical analysis of the ratios of the calculated-to-measured isotopic concentrations of the RCA samples for each isotope. The mean value, plus or minus the standard deviation multiplied by a tolerance factor appropriate to yield a 95/95 confidence level, is determined as the correction factor for a specific isotope. For the fissile isotopes, the correction factor is the mean value plus the modified standard deviation. For nonfissile absorber isotopes, the correction factor is the mean value minus the modified standard deviation. Fissile isotope correction factors that are below 1.0 should be conservatively set to 1.0, and absorber isotope correction factors that are above 1.0 should be conservatively set to 1.0. Since this method includes all the uncertainties associated with the measurements, computer algorithm, data library, and modeling, and since the correction factors are modified only in a manner that will increase k_{eff}, the result is considered bounding.

Direct-Difference Method

The direct-difference method directly computes the k_{eff} bias and bias uncertainty associated with the depletion code for the same set of isotopes by using the measured and calculated isotopic concentrations in the criticality analysis models separately. Two k_{eff} values are obtained in each pair of calculations, and a Δk_{eff} is calculated for each set of measured data. A statistical analysis is performed to calculate the mean value and the uncertainty associated with the mean value of the Δk_{eff}. Regression analysis is performed to determine the bias of the mean Δk_{eff} value as a function of various system parameters (e.g., burnup, initial enrichment).

The direct-difference method requires a full set of measured data for all isotopes for which this method is used to determine the bias and bias uncertainty of the isotopic-depletion analysis code. However, many isotopes in Tables 6A-1 and 6A-2, particularly the fission products, do not have sufficient measured data to allow significant statistical analysis. In these cases, surrogate data have been used, as described in NUREG/CR-7108. This surrogate data set was generated using the available measured data for an isotope as the basis for populating the missing data in the measured data sets. A surrogate data value was determined by multiplying the calculated nuclide concentration by the mean value of the measured-to-calculated concentration ratio values obtained from samples with measured data. The fundamental assumption of this approach is that the limited available measured data are representative of the entire population of isotopic concentration values. When the available measured data for a specific isotope are limited or cover a small burnup range, the applicant should ensure that this assumption is still valid, as Section 6.2 of NUREG/CR-7108 did for molybdenum-95, ruthenium-101, rhodium-103, and cesium-133.

Based on the studies published in NUREG/CR-7108, decay time correction is an important factor when using the direct-difference method. In cases where the cooling times of the samples used in code validation differ from the design-basis fuel cooling time, the error in the isotopic calculations can be large. NUREG/CR-7108 discusses the method for correcting decay times for the samples selected for code validation. This method uses the Bateman Equation (Benedict et al. 1981) to adjust the measured isotopic concentration of the nuclide of interest to the design-basis cooling time of the application. For a general case of nuclide B with a decay precursor A and a daughter product C (i.e., A → B → C), the content of nuclide B at a reference cooling time can be obtained by solving the Bateman Equation. The time-adjusted isotopic concentration should be used in the validation rather than the measurement data. In the case where only a fraction of the decay leads to the production of nuclide B, the fraction of decay of nuclide A leading to nuclide B should also be included. For a nuclide without a significant precursor, the contribution from decay of precursors should be set to zero, and only the decay of nuclide B need be considered.

Monte Carlo Uncertainty Sampling Method

The Monte Carlo uncertainty sampling method generates a depletion code k_{eff} bias (β_i) and bias uncertainty (Δk_i,) for the group of nuclides for which burnup credit is taken. It determines the bias and bias uncertainty using a statistical method that adjusts the isotopic concentrations of the SNF in the criticality analysis model by a factor randomly sampled within the uncertainty band of measured-to-calculated isotopic concentration ratios of each nuclide. NUREG/CR-7108 discusses this approach in more detail. Research results published in NUREG/CR-7108 indicate that this method, although statistically complex and computationally intensive, can be used to determine a more realistic bias and bias uncertainty of the depletion code.

Using the Monte Carlo uncertainty sampling method, ORNL has developed reference bias and bias uncertainty values for the hypothetical GBC-32 storage and transportation system. The NRC finds it acceptable for the applicant to directly use the bias and bias uncertainty values from Tables 6A-3 and 6A-4, in lieu of an explicit depletion validation analysis, provided that the following conditions are met:

- The applicant uses the same depletion code and cross-section library as used in NUREG/CR-7108 (SCALE/TRITON and the ENDF/B-V or ENDF/B-VII cross-section library).
- The applicant can justify that its design is similar to the hypothetical GBC-32 system design used as the basis for the NUREG/CR-7108 isotopic-depletion validation.
- Credit is limited to the specific nuclides listed in Tables 6A-1 and 6A-2 of this attachment.

Bias values should be added to the calculated system k_{eff}, while bias uncertainty values may be statistically combined with other independent uncertainties, consistent with standard criticality safety practice. Demonstration of package similarity to the GBC-32 should consist of a comparison of materials and geometry, as well as neutronic characteristics such as H/X ratio, EALF, neutron spectra, and neutron reaction rates. If any of the above conditions is not met, the applicant should use the direct-difference or isotopic-correction factor methods discussed previously.

6A.6 Code Validation—k_{eff} Determination (Section 6.4.7.4 of this SRP)

For the k_{eff} component of burnup credit criticality calculations, validation is the process by which a criticality code system user demonstrates that the code and associated data predict actual system k_{eff} accurately. The criticality code validation process should include an estimate of the bias and bias uncertainty associated with using the codes and data for a particular application.

American National Standards Institute/American Nuclear Society (ANSI/ANS) 8.1-1998, "Nuclear Criticality Safety in Operations with Fissionable Materials Outside Reactors," states the following:

> Bias shall be established by correlating the results of critical and exponential experiments with results obtained for these same systems by the calculational method being validated.

The previous technical basis for burnup credit in ISG-8, Revision 2, limited credit to the major actinides, since there were not adequate critical experiments at the time for estimating the bias and bias uncertainty relative to modeling SNF in a storage cask, or package, environment. This technical basis considered the fact that no critical experiments existed that included the fission-product isotopes important to burnup credit. Additionally, critical experiments available for actinide validation were limited to only (i) fresh low-enriched UO_2 systems and (ii) fresh mixed uranium and plutonium oxide [mixed oxide (MOX)] systems. These systems are not entirely representative of SNF in a transportation package, as fresh UO_2 systems contain no plutonium, and the MOX experiments generally do not have plutonium isotopic ratios consistent with those of burned fuel.

Table 6A-3 Isotopic k_{eff} bias uncertainty (Δk_i) for the representative PWR SNF system model using ENDF/B-VII data (β_i = 0) as a function of assembly-average burnup		
Burnup (BU) Range (GWd/MTU)	**Actinides Only Δk_i**	**Actinides and Fission Products Δk_i**
0≤BU<5	0.0145	0.0150
5≤BU<10	0.0143	0.0148
10≤BU<18	0.0150	0.0157
18≤BU<25	0.0150	0.0154
25≤BU<30	0.0154	0.0161
30≤BU<40	0.0170	0.0163
40≤BU<45	0.0192	0.0205
45≤BU<50	0.0192	0.0219
50≤BU≤60	0.0260	0.0300

Table 6A-4 Isotopic k_{eff} bias (β_i) and bias uncertainty (Δk_i) for the representative PWR SNF system model using ENDF/B-V data as a function of assembly-average burnup		
Burnup (BU) Range (GWd/MTU)[a]	**β_i for Actinides and Fission Products**	**Δk_i for Actinides and Fission Products**
0≤BU<10	0.0001	0.0135
10≤BU<25	0.0029	0.0139
25≤BU≤40	0.0040	0.0165
[a]Bias and bias uncertainties associated with ENDF/B-V data were calculated for a maximum of 40 GWd/MTU. For higher burnups, applicants should provide an explicit depletion-code validation analysis using one of the methods described in this attachment, along with appropriate RCA data.		

While there were no representative critical experiments for SNF transportation or storage criticality validation, there were RCA data that were considered adequate for validating actinide isotopic-depletion calculations for major actinide absorbers. For this reason, as well as the criticality-validation limitations discussed above, the NRC staff deemed it appropriate to recommend "actinide-only" credit for SNF transportation and storage criticality-safety evaluations. This approach represented the bulk of the reduction in k_{eff} resulting from depletion of the fuel (see Table 6A-5) and excluded the fission products, which served as additional margin to cover uncertainties from modeling of actinide depletion k_{eff} effects.

Although there continue to be insufficient critical experiments for a traditional validation of the code-predicted reduction in k_{eff} resulting from fission products and minor actinides in SNF, a group of critical experiments designed for validating SNF k_{eff} reduction resulting from major actinides has become available since ISG-8, Revision 2, was published. NUREG/CR-6979, "Evaluation of the French Haut Taux de Combustion (HTC) Critical Experiment Data," issued September 2008, describes these actinide criticality validation data in detail. The data are available to applicants from ORNL, subject to execution of a nondisclosure agreement. These experiments are more appropriate for validating the code-predicted reduction in k_{eff} resulting from actinide depletion than are the fresh UO_2 or other MOX critical experiments. The HTC experiments consisted of fuel pins fabricated from mixed uranium and plutonium oxide, with the uranium and plutonium isotopic ratios designed to approximate what would be expected from UO_2 fuel burned in a PWR to 37.5 GWd/MTU. While these experiments were designed to correspond to a single burnup rather than the range of burnups that would be ideal for criticality validation, this data set represents a significant improvement to the criticality validation data available for actinide isotopes.

Table 6A-5 Fission product reactivity worth for "typical" burnup in generic burnup credit cask (GBC-32) with 4 weight percent uranium-235 Westinghouse 17×17 OFA, burned to 40 GWd/MTU			
Credited Nuclides	**k_{eff}**	**Δk**	**%Δk[a]**
Fresh Fuel	1.13653		
8 Major Actinides[b]	0.94507	0.19146	71.9
All Actinides	0.93486	0.01021	3.8
Key 6 Fission Products[c]	0.88499	0.04987	18.7
All Remaining Fission Products	0.87010	0.01489	5.6
Totals		0.26643	100

[a]This is the percentage of total Δk for the burnup attributable to the portion of the total nuclide population in the first column.
[b]Eight major actinides include uranium-235, uranium-238, plutonium-238, plutonium-239, plutonium-240, plutonium-241, plutonium-242, and americium-241.
[c]Six key fission products include rhodium-103, cesium-133, samarium-149, samarium-151, neodymium-143, and gadolinium-155.

The improvement to the actinide criticality validation data set allows applicants for burnup credit in SNF transportation packages and storage casks to perform a traditional validation of the actinide component of the reduction in k_{eff} resulting from burnup, following the recommendations of NUREG/CR-6361. NUREG/CR-7109 contains ORNL's representative actinide criticality validation for the GBC-32 transportation and storage system using the best available validation data.

Although the contribution from fission products to the reduction in k_{eff} resulting from burnup is relatively small (see Table 6A-5), applicants for SNF transportation packages have requested the additional credit represented by these absorbers. The apparent need for fission product credit results from the significant increase in the percentage of discharged PWR fuel assemblies that can be stored or shipped in a high-capacity (e.g., 32-assembly) system. Figure 6A-8 represents a typical discharged PWR fuel population in terms of initial enrichment and burnup. Two representative loading curves, one for actinide-only burnup credit and another for actinide and fission product burnup credit, are overlain on this figure, showing the relative amounts of the PWR fuel population that would be transportable in a hypothetical package. Although the loading curve does not move significantly from actinide-only credit to actinide and fission product credit, the curve moves across the bulk of the discharged fuel population, making a greater percentage of this population transportable. If more transportation packages have this high capacity, then the total number of eventual SNF shipments could be reduced.

The ability to properly validate criticality codes for actinide burnup credit is a crucial step toward recommending fission product credit, as the actinides represent the bulk of the reduction in k_{eff} resulting from burnup. However, it is still necessary to be able to estimate the bias and bias uncertainty that result from modeling fission products in SNF. Even so, critical experiments that include fission product absorbers continue to be exceedingly rare. As of this writing, there are only a handful of such publicly available critical experiments: one set involving samarium-149 (LEU-COMP-THERM-050), another involving rhodium-103 (LEU-COMP-THERM-079), and a third involving elemental samarium, cesium, rhodium, and europium (LEU-MISC-THERM-005).[6] The preferred method for further fission product criticality validation would be the development of numerous and varied critical experiments involving both actinide and fission product absorbers

[6] The Nuclear Energy Agency's "International Handbook of Evaluated Criticality Safety Benchmark Experiments," which is updated and published annually, describes these three sets of experiments.

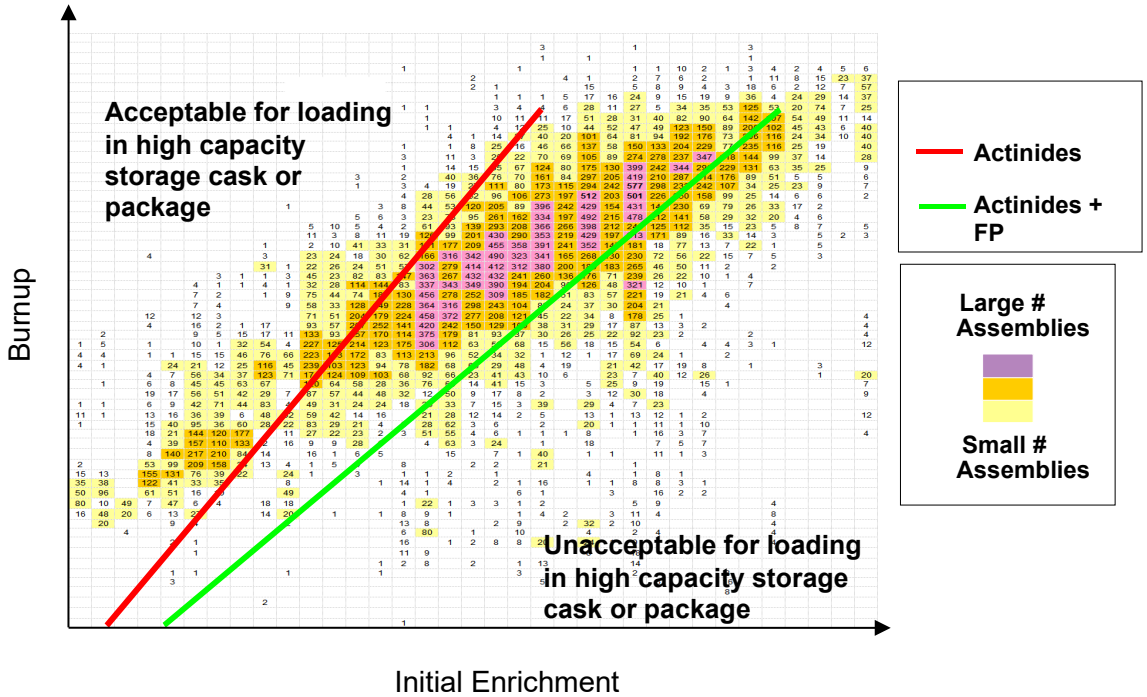

Figure 6A-8 Representative loading curves and discharged PWR population

in concentrations representative of SNF of various initial enrichments and burnups. Given the cost and practical difficulties associated with such a critical experiment program (e.g., obtaining specific absorber isotopes as opposed to natural distributions of isotopes), the NRC staff does not expect to see such experiments carried out within a reasonable timeframe. In the absence of such important criticality validation data, the NRC staff and contractors at ORNL sought alternative methods for estimating fission product bias and bias uncertainty.

To achieve an appropriate estimate of the k_{eff} bias and bias uncertainty for fission products, ORNL developed a methodology based on the SCALE Tools for Sensitivity and Uncertainty Methodology Implementation (TSUNAMI) code (Rearden 2009), developed as part of the SCALE code system. This methodology uses the nuclear data uncertainty estimated for each fission product cross section known as the "cross section covariance data." These data are provided with the ENDF/B-VII cross section library. The TSUNAMI code is used to propagate the cross section uncertainties represented by the covariance data into k_{eff} uncertainties for each fission product isotope used in a particular application. The theoretical basis of this validation technique is that computational biases are primarily caused by errors in the cross section data, which are quantified and bounded, with a 1σ confidence, by the cross section covariance data. NUREG/CR-7109 discusses the validity of this theoretical basis in greater detail.

This methodology has been benchmarked against the large number of low-enrichment uranium critical experiments, high-enrichment uranium critical experiments, plutonium critical experiments, and mixed uranium and plutonium critical experiments to demonstrate that the k_{eff} uncertainty estimates the method generated are consistent with the calculated biases for these systems. The k_{eff} uncertainty results for specific fission products were also compared to fission product bias estimates obtained from the limited number of critical experiments that include

fission products. NUREG/CR-7109 describes the uncertainty analysis method and provides details of the comparisons. The results demonstrate that, for a generic SNF transportation package evaluated with the SCALE code system and the ENDF/B-V, ENDF/B-VI, or ENDF/B-VII cross-section libraries, the total fission product nuclear data uncertainty (1σ) does not exceed 1.5 percent of the total minor actinide and fission product worth for the 19 nuclides (Table 6A-2) considered over the burnup range of interest (i.e., 5 to 60 GWd/MTU). Since the uncertainty in k_{eff} resulting from the uncertainty in the cross-section data is an indication of how large the actual code bias could be, the 1.5-percent value should be used as a bias (i.e., it should be added directly to the calculated k_{eff}). Because of the conservatism in this value, no additional uncertainty in the bias needs to be applied.

To use the 1.5-percent value directly as a bias, applicants must demonstrate that they have used the code in a manner consistent with the modeling options and initial assumptions used in NUREG/CR-7109. Applicants must also demonstrate that their SNF transportation package design is similar to the GBC-32 used to develop the bias estimate. This demonstration should consist of a comparison of materials and geometry, as well as neutronic characteristics such as H/X ratio and EALF. Since improved actinide validation with the HTC experiments discussed previously represents a considerable part of the technical basis for crediting fission product absorbers, applicants should validate the actinide portion of the k_{eff} evaluation against this data set.

Applicants may also use a different criticality code if the code uses ENDF/B-V, ENDF/B-VI, or ENDF/B-VII cross-section data. In this case, the combined minor actinide and fission product bias and bias uncertainty should be increased to 3.0 percent. NUREG/CR-7109 shows that the bias and bias uncertainty are based largely on the uncertainty in the nuclear data. However, there are differences in how different codes handle the same cross-section data, potentially affecting bias and bias uncertainty. Since validation studies similar to that performed in NUREG/CR-7109 have not been performed for other codes, the staff finds that an additional k_{eff} penalty should be applied to cover any other uncertainties, and that doubling the 1.5 percent determined for the SCALE code system is conservative. ORNL performed additional analyses with MCNP5 and MCNP6, with ENDF/B-V, ENDF/B-VI, ENDF/B-VII, and ENDF/B-VII.1 cross-section data. These analyses, documented in NUREG/CR-7205, “Bias Estimates Used in Lieu of Validation of Fission Products and Minor Actinides in MCNP K_{eff} Calculations for PWR Burnup Credit Casks,” issued September 2015, demonstrate that the 1.5-percent value is also acceptable for use with these codes and cross-section libraries.

The reviewer should consider applicant requests to use the 1.5-percent value for other well-qualified industry standard code systems, provided that the application includes justification that this value is appropriate for that specific code system (e.g., a minor actinide and fission product worth comparison to SCALE results). For applications in which the applicant uses cross section libraries other than ENDF/B-V, ENDF/B-VI, or ENDF/B-VII, the transportation package cannot be demonstrated to be similar to the GBC-32, or the credited minor actinide and fission product worth is significantly greater than 0.1 in k_{eff}, an explicit validation analysis should be performed to determine the bias and bias uncertainty associated with minor actinides and fission products.

Integral Validation

ANSI/ANS 8.27-2008, “Burnup Credit for LWR Fuel,” provides a burnup credit criticality validation option consisting of analysis of applicable critical systems consisting of irradiated fuel with a known irradiation history. This is known as integral, or “combined,” validation, since the

bias and bias uncertainty associated with the depletion calculation method is inseparable from that associated with the criticality calculation method. The most common publicly available sources of integral validation data are commercial reactor critical (CRC) state points. These CRC state points consist of either a hot zero-power critical condition attained after sufficient cooling time to allow the fission product xenon inventory to decay or at-power equilibrium critical condition where xenon worth has reached a fairly stable value.

NUREG/CR-6951, "Sensitivity and Uncertainty Analysis of Commercial Reactor Criticals for Burnup Credit," issued January 2008, shows CRC state points to be similar to storage cask-like and package-like environments, with respect to neutron behavior. With integral validation, however, the biases and uncertainties for the depletion approach cannot be separated from those associated with the criticality calculation, and only the net biases and uncertainties from the entire procedure are obtained. This approach allows for compensating errors between the depletion methodology and the criticality methodology (e.g., underprediction of a given nuclide's concentration coupled with simultaneous overprediction of this nuclide's effect on k_{eff}). It is desirable to understand the sources of uncertainty associated with the depletion methodology separately from those associated with the criticality methodology, to ensure that the overall bias and bias uncertainty are determined correctly for the transportation package, including package arrays, for the entire range of parameters.

Additionally, concerns remain about the physical differences between CRC state points and storage casks and transportation packages. These differences include borated water in a reactor versus fresh water in a package, high-worth absorber plates in a package versus none in a reactor, low moderator density in a reactor versus full density in a package, and high temperature in a reactor versus low temperature in a package. CRC state points also consist of calculated isotopic concentrations, as opposed to the measured concentrations one would expect in a typical laboratory critical experiment. Furthermore, CRC state points are inherently complicated to model, given the large number of assemblies and axial zones with different initial enrichments and burnups necessary to accurately model the reactor core. All of these concerns introduce additional uncertainties into a validation approach that attempts to use CRC state points.

For the reasons stated above, the staff does not recommend using integral validation approaches, with CRC state points or any other available integral validation data, for burnup credit criticality validation. However, if integral validation is used, the applicant should account for additional uncertainties, such as those identified above, and consider the use of a k_{eff} penalty to offset those uncertainties.

Loading Curve and Burnup Verification (Section 6.4.7.5 of this SRP)

As part of storage and transportation operations, loading curves are used to display acceptable combinations of assembly-average burnup and initial enrichment for loading fuel assemblies. Assemblies with insufficient burnup, in comparison with the loading curve, are not acceptable for loading, as shown in Figure 6A-8. Misloads have occurred in both dry storage casks and SNF pools, in which fuel did not satisfy allowable parameters (e.g., burnup, cooling time, and enrichment). Misloads occur because of misidentification, mischaracterization, or misplacement of fuel assemblies. In some cases, misloads have resulted in unanalyzed loading configurations during storage of SNF. To date, the known dry storage cask misload events have not had significant implications for criticality safety.

For efficiency and economic purposes in power plant operations, extraction of maximum power output from a fuel assembly before discharging it from the reactor is desirable. However, some

fuel assemblies have been removed from the reactor before achieving their desired burnup because of fabrication or performance issues. Once discharged from the reactor, these fuel assemblies are stored in the SNF pool. Because the SNF pool may contain assemblies with varying burnups, enrichments, and cooling times, a more reactive assembly could potentially be misloaded. Assemblies with fabrication issues, errors in reactor records, or operator actions that impact fuel handling activities are some of the several factors that can result in a misload.

ISG-8, Revision 3, specifies that certain administrative procedures should be established to ensure that fuel designated for a particular storage or transportation system is within the specifications for approved contents. The guidance recommends burnup measurement as a way to protect against misloads by identifying potential errors in reactor records or misidentification of assemblies being loaded into the system. As part of the overall initiative to revise the recommendations for the staff review of burnup credit criticality, the potential effects of misloaded assemblies on system reactivity were investigated.

Misloading of unirradiated fuel assemblies is unlikely for several reasons. First, storage and transportation system loading typically occurs when unirradiated fuel is not present in the SNF pool. Second, SNF is noticeably different than unirradiated fuel (e.g., color, deformation), and visually identifiable. Finally, the economic incentive involved with new fuel assemblies, would make permanent misloads of unirradiated fuel assemblies in dry storage casks or transportation packages unlikely.

Although misloading of unirradiated fuel assemblies is considered to be unlikely, an assembly that has been irradiated to less than the target burnup value (i.e., the assembly is underburned) could conceivably be misloaded into an SNF storage cask or transportation package. Misloading of one or more underburned fuel assemblies could increase the overall system reactivity. The amount of reactivity increase depends on several factors, including the degree of burnup in comparison to the loading curve, the cooling time, and the location of the assembly within the system.

The NRC has received reports of events involving misloads occurring within SNF pools and dry storage casks. Most of these misloads occurred as a result of inadequate fuel-selection procedures or inaccurate parameter data (i.e., burnup, enrichment, cooling time). Using available misload data, the RES report, “Estimating the Probability of Misload in a Spent Fuel Cask,” issued June 2011 (NRC 2011), evaluated the likelihood of misloading fuel assemblies within an SNF transportation package. This report determined the probability of single- and multiple-assembly misloads for ranges of burnup values dependent on the available SNF pool inventory. RES determined that the overall probability of misloading a fuel assembly that does not meet the burnup credit loading curve is in the range of 10^{-2} to 10^{-3}, which is considered credible.

NUREG/CR-6955, “Criticality Analysis of Assembly Misload in a PWR Burnup Credit Cask,” issued January 2008, evaluated the effects of single and multiple misloaded assemblies on the reactivity in a storage or transportation system. This evaluation covered the misloading of unirradiated and underburned PWR fuel assemblies in a GBC-32 high-capacity storage and transportation system. The scope of this report included varying the degree to which misloaded assemblies were underburned to determine the change in reactivity when including actinide-only and actinide and fission product burnup credit. The analysis covered a range of enrichments up to 5.0 weight percent uranium-235, while placing between one and four misloaded assemblies into the most reactive positions within the system. All assemblies within the system were assumed to undergo a cooling period of 5 years. The study evaluated the misloaded

assemblies at 90, 80, 50, 25, 10, and 0 percent (unirradiated) of the minimum assembly-average burnup value required by the loading curve.

The evaluation in NUREG/CR-6955 concluded that for the particular system design and fuel assembly parameters used, a reactivity increase between 2.0 and 5.5 percent in k_{eff} could be expected for various misloaded systems. Given the operational history and the accuracy of the reactor records, this information can be used along with the misload probability to determine an appropriate method of addressing assembly misloads as part of the criticality evaluation. Applicants may perform a misload analysis in lieu of a confirmatory burnup measurement.

Misload Evaluation

The applicant's misload evaluation should be based on a reliable and relatively recent estimate of the discharged PWR fuel population and should reflect the segment of that population that is intended to be stored or transported in the storage cask or package design. This population may consist of the entire population of discharged PWR fuel assemblies; a specific design of PWR fuel assembly (e.g., W17x17 OFA); or a smaller, specific population from a particular site. As of this writing, the 2002 Energy Information Administration (EIA) RW-859, "Nuclear Fuel Survey" (EIA 2004), is an acceptable source of discharged fuel data, although more recent data may be available (i.e., GC-859, "Nuclear Fuel Survey" (EIA 2015).

An applicant's misload analysis should evaluate both a single, severely underburned misload and a misload of multiple moderately underburned assemblies in a single SNF storage cask or package. The single severely underburned assembly should be chosen such that any assembly-average burnup and initial enrichment along an equal reactivity curve bound 95 percent of the discharged fuel population considered unacceptable for loading in the applicant's storage cask or transportation package with 95-percent confidence. Applicants should provide a statistical analysis of the underburned fuel population to support the selection of severely underburned assemblies.

The 95/95 criterion for evaluations of single high-reactivity misloads, in combination with the administrative procedures for misload prevention (see Administrative Procedures below), is reasonably bounding as more reactive misloads are unlikely. The assembly-average burnup and initial enrichment that match this 95/95 criterion are dependent on the loading curve for the storage or transportation system. Applicants are likely to seek a level of burnup credit that results in qualification of the greatest possible amount of the fuel population for storage or shipment in the system. Therefore, assemblies matching the 95/95 criterion will be those with relatively high enrichment and low burnup (e.g., 5 weight percent uranium-235 and 15 GWd/MTU). Based on the data in the 2002 EIA RW-859, the number of discharged assemblies of greater reactivity is very small, even for cases where all discharged assemblies of a given burnup and initial enrichment are located in a single SNF pool.

For the evaluation of the applicant's storage cask or package with multiple moderately underburned assemblies, misloaded SNF should be assumed to make up at least 50 percent of the system payload and should be chosen such that the assembly-average burnups and initial enrichments along the equal reactivity curve bound 90 percent of the total discharged fuel population. Such an evaluation is reasonably bounding for cases of multiple misloads in a single SNF storage cask or package based on the considerations in the following paragraph.

The 90-percent criterion is based on the total discharged fuel population and not the specific loading curve for the system design. The distribution of discharged fuel peaks within a relatively narrow band of burnup for each initial enrichment value. The curve that represents a reactivity

that bounds 90 percent of the discharged population is expected to pass through burnup and enrichment combinations that are below this peak. However, the population along this curve is still large enough to represent possible misload scenarios involving multiple assemblies. Below the 90-percent criterion curve, with few exceptions, the numbers of assemblies for each burnup and enrichment combination drop significantly. Thus, it is reasonable to expect that misloading of multiple assemblies of the remaining 10 percent of the discharged population would be less likely. Although there are larger numbers of low-burnup assemblies for specific initial enrichments, facilities that have a significant number of these assemblies can reduce the likelihood of misloading multiples of these assemblies in the same storage cask or package with proper administrative controls.

The recommendation for assuming misloading of at least 50 percent of the system is based on consideration of the history of misloads in dry SNF storage operations and the fact that systematic errors can result in misloading of multiple assemblies. Misloads that have occurred in dry SNF storage operations have typically involved multiple assemblies. The most significant of these incidents resulted in less than 25 percent of the storage cask capacity being misloaded. While the probability of a multiple-misload scenario decreases with increasing number of assemblies involved, systematic errors can increase the likelihood of such misloads. Considering these factors, there is reasonable assurance that a scenario that involves misloading at least 50 percent of the storage cask or package capacity would bound the extent of likely multiple-misload conditions. The implementation of the administrative procedures recommended in Section 6.4.7.5 of this SRP and in this attachment for preventing misloads provides additional assurance against more extensive misload situations.

It is possible that SNF storage casks and packages designed for specific parts of the fuel population (e.g., particular sites or fuel types) will have loading curves that already bound 90 percent of the discharged fuel population. In these cases, misload analysis for multiple assemblies is not necessary.

An SNF storage or transportation system should be designed to have a limited sensitivity to misloads, such that increases in k_{eff} when considering misloads are minimized. In any case, the applicant should demonstrate that the system remains subcritical under misload conditions, including biases, uncertainties, and an administrative margin. As in the nominal loading analyses, the misload analyses should use the design parameters and specifications that maximize system reactivity. The administrative margin is normally 0.05. However, for misload evaluations, a different administrative margin may be used, given two conditions. First, the administrative margin should not be less than 0.02. Second, any use of an administrative margin less than 0.05 should be adequately justified. An adequate justification should consider the level of conservatism in the depletion and criticality calculations, sensitivity of the system to further upset conditions, and the level of rigor in the code-validation methods.

An administrative margin is used with criticality evaluations to ensure that a system that is calculated to be subcritical is actually subcritical. This margin is used to ensure against unknown errors or uncertainties in the method of calculating k_{eff}, as well as impacts of system design and operating conditions not explicitly considered in the analysis. Criticality safety practices in other regulated areas give allowance for using different administrative margins. Experience with identified code errors and an understanding of uncertainties in cross-section data and their impacts on reactivity indicate that an administrative margin of at least 0.02 is necessary for analyses to show subcriticality with misloads.

Taking credit for burnup reduces the margin in the analyses and makes them more realistic. Additionally, decreasing the administrative margin for misload analyses further reduces the margin for subcriticality. This reduction in overall criticality safety margin necessitates greater justification for a lower administrative margin. The justification should demonstrate a greater level of assurance that the various sources of bias and bias uncertainty have been considered and that the bias and bias uncertainty are known to a high degree of accuracy. The principles and concepts discussed in Division of Fuel Cycle Safety and Safeguards ISG-10, "Justification for Minimum Margin of Subcriticality for Safety" (NRC 2000), are useful in understanding the kinds of evaluations and evaluation rigor that should be considered for justification of a lower administrative margin. These concepts include assurances of the consistent presence and degree of conservatism in the evaluations that may be relied on, the quality and number of benchmark experiments as they relate to the application and the misload cases, and evaluation of the sensitivity of k_{eff} to other system parameter changes.

Administrative Procedures

Along with the misload analysis, administrative procedures should be established in addition to those procedures typically performed for non-burnup credit systems. The purpose of these additional procedures is to ensure that the system will be loaded with fuel that is within approved technical specifications or CoC conditions. Procedures considered to protect against misloads in storage and transportation systems that rely on burnup credit for criticality safety may include the following:

- verification of the location of high-reactivity fuel (i.e., fresh or severely underburned fuel) in the SNF pool both before and after loading
- qualitative verification that the assembly to be loaded is burned (visual or gross measurement)
- under an NRC-approved quality assurance program, verification before shipment of the inventory and loading records of a canister or storage cask that was previously loaded and placed into dry storage and that is to be shipped in or as the package
- quantitative measurement of any fuel assemblies without visible identification numbers
- independent, third-party verification of the loading process, including the fuel selection process and fuel move instructions
- (for dry storage under Title 10 of the *Code of Federal Regulations* (10 CFR) Part 72, "Licensing Requirements for the Independent Storage of Spent Nuclear Fuel, High-Level Radioactive Waste, and Reactor-Related Greater Than Class C Waste") minimum soluble boron concentration in pool water, to offset the misloads described above, during loading and unloading

Most of these recommendations are intended to ensure that high-reactivity fuel is not present in the pool during loading or is otherwise accounted for and determined not to have been loaded into an SNF storage system or transportation package. The verification of the storage system inventory and loading records before loading and shipment in a package is intended to ensure that the contents of previously loaded storage systems are as expected before shipment. This verification should be performed under an approved 10 CFR Part 71, "Packaging and Transportation of Radioactive Materials" quality assurance program.

Quantitative measurement of SNF without visible identification is recommended since there is no other apparent way to demonstrate that such assemblies are tied to a specific burnup value.

Independent, third-party verification of the fuel selection process means verification of the correct application of fuel-acceptability standards and the fuel move instructions.

Soluble boron is recommended as an unloading condition to ensure that misloads are protected against when future unloading operations occur, since the conditions of such operations are currently unknown and may inadvertently introduce unborated water into the system. Soluble boron is typically present during PWR SNF loading operations for dry storage or transportation systems. An appropriate soluble boron concentration during loading and unloading would be that required to maintain system k_{eff} below 0.95 with the more limiting (in terms of k_{eff}) of the single, severely underburned or multiple moderately underburned misloads described previously. Consistent with requirements such as those in 10 CFR 71.55(b), transportation package analyses cannot credit the soluble boron present during PWR SNF loading into or unloading from the package. Therefore, the discussion regarding use of a minimum soluble boron concentration during loading and unloading (and credit for this soluble boron in analyses) applies only to loading and unloading for dry storage under 10 CFR Part 72.

This revision of the criticality safety review guidance for burnup credit in the SRP includes misload analyses as an alternative to burnup confirmation using measurement techniques. A number of misloads have occurred within SNF pools and storage casks as a result of human errors or inaccurate assembly data. Efforts have been made to evaluate the criticality effects of misloading assemblies into an SNF transportation package. Using credible bounding assumptions, a misload analysis could be generated to account for potential events during loading, while maintaining an appropriate safety margin.

6A.7 References

10 CFR Part 71, “Packaging and Transportation of Radioactive Materials.”

10 CFR Part 72, “Licensing Requirements for the Independent Storage of Spent Nuclear Fuel, High-Level Radioactive Waste, and Reactor-Related Greater Than Class C Waste.”

American National Standards Institute/American Nuclear Society (ANSI/ANS) 8.1-1998 (R2007), “Nuclear Criticality Safety in Operations with Fissionable Materials Outside Reactors,” American Nuclear Society, La Grange Park, IL.

ANSI/ANS 8.27-2008, “Burnup Credit for LWR Fuel,” American Nuclear Society, La Grange Park, IL.

Benedict, M., T.H. Pigford, and H.W. Levi, *Nuclear Chemical Engineering*, Second Edition, McGraw Hill, New York, NY, 1981.

DeHart, M.D., “Sensitivity and Parametric Evaluations of Significant Aspects of Burnup Credit for PWR Spent Fuel Packages,” ORNL/TM-12973, Lockheed Martin Energy Research Corp., Oak Ridge National Laboratory, Oak Ridge, TN, May 1996.

DeHart, M.D., “Triton: A Two-Dimensional Transport and Depletion Module for Characterization of Spent Nuclear Fuel,” ORNL/TM-2005/39, Version 6, Vol. I, Section T1, Oak Ridge, TN, January 2009.

DOE/RW-0496, “Horizontal Burnup Gradient Datafile for PWR Assemblies,” U.S. Department of Energy, Office of Civilian Radioactive Waste Management, Washington, DC, May 1997.

Duderstadt, J.J. and L.J. Hamilton, *Nuclear Reactor Analysis*, John Wiley & Sons Inc., Hoboken, NJ, 1976.

Blomquist, Roger N., Malcolm Armishaw, David Hanlon, Nigel Smith, Yoshitaka Naito, Jinan Yang, Yoshinori Mioshi, Toshihiro Yamamoto, Olivier Jacquet, and Joachim Miss, “Source Convergence in Criticality Safety Analyses, Phase I: Results for Four Test Problems,” NEA No. 5431, NEA OECD, 2006.

MCNP5, “MCNP—A General Monte Carlo N-Particle Transport Code, Version 5; Volume II: User’s Guide,” LA-CP-03-0245, Los Alamos National Laboratory, Los Alamos, NM, April 2003.

NRC, ISG-8, Revision 2, “Burnup Credit in the Criticality Safety Analyses of PWR Spent Fuel in Transport and Storage Casks,” Spent Fuel Project Office, U.S. Nuclear Regulatory Commission, Washington, DC, September 27, 2002.

NRC, ISG-8, Revision 3, “Burnup Credit in the Criticality Safety Analyses of PWR Spent Fuel in Transport and Storage Casks,” Spent Fuel Project Office, U.S. Nuclear Regulatory Commission, Washington, DC, September 26, 2012.

NRC, ISG-10, Revision 0, “Justification for Minimum Margin of Subcriticality for Safety,” Division of Fuel Cycle Safety and Safeguards, U.S. Nuclear Regulatory Commission, Washington, DC, July 2000 (Agencywide Documents Access and Management System (ADAMS) Accession No. ML061650370).

NRC, “Revisiting the Paradigm for Spent Fuel Storage and Transportation Regulatory Programs,” Staff Requirements Memorandum COMDEK-09-0001, U.S. Nuclear Regulatory Commission, Washington, DC, February 2010 (ADAMS Accession Nos. ML100491511 and ML100500024).

NRC, “Estimating the Probability of Misload in a Spent Fuel Cask,” Office of Nuclear Regulatory Research, U.S. Nuclear Regulatory Commission, Washington, DC, November 2011 (ADAMS Accession No. ML113191144).

Nuclear Energy Agency, “International Handbook of Evaluated Criticality Safety Benchmark Experiments,” Nuclear Science Committee, updated and published annually, https://www.oecd-nea.org/science/wpncs/icsbep/handbook.html.

NUREG/CR-5661, “Recommendations for Preparing the Criticality Safety Evaluation of Transportation Packages,” ORNL/TM-11936, Oak Ridge National Laboratory, Oak Ridge, TN, April 1997.

NUREG/CR-6361, “Criticality Benchmark Guide for Light-Water-Reactor Fuel in Transportation and Storage Packages,” ORNL/TM-13211, Oak Ridge National Laboratory, Oak Ridge, TN, March 1997.

NUREG/CR-6665, “Review and Prioritization of Technical Issues Related to Burnup Credit for LWR Fuel,” ORNL/TM-1999/303, Oak Ridge National Laboratory, Oak Ridge, TN, February 2000.

NUREG/CR-6747, “Computational Benchmark for Estimation of Reactivity Margin from Fission Products and Minor Actinides in PWR Burnup Credit,” ORNL/TM-2000/306, Oak Ridge National Laboratory, Oak Ridge, TN, October 2001.

NUREG/CR-6759, “Parametric Study of the Effect of Control Rods for PWR Burnup Credit,” U.S. Nuclear Regulatory Commission,” ORNL/TM 2001/69, Oak Ridge National Laboratory, Oak Ridge, TN, February 2002.

NUREG/CR-6760, “Study of the Effect of Integral Burnable Absorbers on PWR Burnup Credit,” ORNL/TM-2000/321, Oak Ridge National Laboratory, Oak Ridge, TN, March 2002.

NUREG/CR-6761, “Parametric Study of the Effect of Burnable Poison Rods for PWR Burnup Credit,” ORNL/TM-2000/373, Oak Ridge National Laboratory, Oak Ridge, TN, March 2002.

NUREG/CR-6781, “Recommendations on the Credit for Cooling Time in PWR Burnup Credit Analyses,” ORNL/TM-2001/272, Oak Ridge National Laboratory, Oak Ridge, TN, January 2003.

NUREG/CR-6800, “Assessment of Reactivity Margins and Loading Curves for PWR Burnup-Credit Cask Designs,” ORNL/TM-2002/6, Oak Ridge National Laboratory, Oak Ridge, TN, March 2003.

NUREG/CR-6801, “Recommendations for Addressing Axial Burnup in PWR Burnup Credit Analyses,” ORNL/TM-2001/273, Oak Ridge National Laboratory, Oak Ridge, TN, March 2003.

NUREG/CR-6811, “Strategies for Application of Isotopic Uncertainties in Burnup Credit,” ORNL/TM-2001/257, Oak Ridge National Laboratory, Oak Ridge, TN, June 2003.

NUREG/CR-6951, “Sensitivity and Uncertainty Analysis of Commercial Reactor Criticals for Burnup Credit,” ORNL/TM-2006/87, Oak Ridge National Laboratory, Oak Ridge, TN, January 2008.

NUREG/CR-6955, “Criticality Analysis of Assembly Misload in a PWR Burnup Credit Cask,” ORNL/TM-2004/52, Oak Ridge National Laboratory, Oak Ridge, TN, January 2008.

NUREG/CR-6968, “Analysis of Experimental Data for High Burnup PWR Spent Fuel Isotopic Validation—Calvert Cliffs, Takahama, and Three Mile Island Reactors,” ORNL/TM-2008/071, Oak Ridge National Laboratory, Oak Ridge, TN, February 2010.

NUREG/CR-6969, “Analysis of Experimental Data for High Burnup PWR Spent Fuel Isotopic Validation-ARIANE and REBUS Programs (UO_2 Fuel),” ORNL/TM-2008/072, Oak Ridge National Laboratory, Oak Ridge, TN, February 2010.

NUREG/CR-6979, “Evaluation of the French Haut Taux de Combustion (HTC) Critical Experiment Data,” ORNL/TM-2007/083, Oak Ridge National Laboratory, Oak Ridge, TN, September 2008.

NUREG/CR-7012, “Uncertainties in Predicted Isotopic Compositions for High Burnup PWR Spent Nuclear Fuel,” ORNL/TM-2010/41, Oak Ridge National Laboratory, Oak Ridge, TN, January 2011.

NUREG/CR-7013, “Analysis of Experimental Data for High-Burnup PWR Spent Fuel Isotopic Validation—Vandellós II Reactor,” ORNL/TM-2009/321, Oak Ridge National Laboratory, Oak Ridge, TN, January 2011.

NUREG/CR-7108, “An Approach for Validating Actinide and Fission Product Burnup Credit Criticality Safety Analyses—Isotopic Composition Predictions,” ORNL/TM-2011/509, Oak Ridge National Laboratory, Oak Ridge, TN, April 2012.

NUREG/CR-7109, “An Approach for Validating Actinide and Fission Product Burnup Credit Criticality Safety Analyses—Criticality (k_{eff}) Predictions,” ORNL/TM-2011/514, Oak Ridge National Laboratory, Oak Ridge, TN, April 2012.

NUREG/CR-7194, “Technical Basis for Peak Reactivity Burnup Credit for BWR Spent Nuclear Fuel in Storage and Transportation Systems,” ORNL/TM-2014/240, Oak Ridge National Laboratory, Oak Ridge, TN, April 2015.

NUREG/CR-7205, “Bias Estimates Used in Lieu of Validation of Fission Products and Minor Actinides in MCNP K_{eff} Calculations for PWR Burnup Credit Casks,” ORNL/TM-2012/544, Oak Ridge National Laboratory, Oak Ridge, TN, September 2015.

Oak Ridge National Laboratory, “SCALE: A Comprehensive Modeling and Simulation Suite for Nuclear Safety Analysis and Design,” ORNL/TM-2005/39, Version 6.1, June 2011. Available as CCC-785 from the Radiation Safety Information Computational Center at Oak Ridge National Laboratory, Oak Ridge, TN, https://rsicc.ornl.gov/Catalog.aspx?c=CCC.

Rearden, B.T., “TSUNAMI-3D: Control Module for Three-Dimensional Cross-Section Sensitivity and Uncertainty Analysis for Criticality,” ORNL/TM-2005/39, Version 6, Vol. I, Section C9, Oak Ridge National Laboratory, Oak Ridge, TN, January 2009.

RW-859, “Nuclear Fuel Data Survey, U.S. Energy Information Administration, Washington, DC, https://www.eia.gov/nuclear/spent_fuel/.

Withee, C.J., Memorandum to M. Wayne Hodges, “ISG-8, Rev. 2, Supporting Document,” U.S. Nuclear Regulatory Commission, Washington, DC, September 27, 2002 (ADAMS Accession No. ML022700395).

YAEC-1937, “Axial Burnup Profile Database for Pressurized-Water Reactors,” Yankee Atomic Electric Company, May 1997. Available as Data Package DLC-201, PWR-AXBUPRO-SNL, from the Radiation Safety Information Computational Center at Oak Ridge National Laboratory, Oak Ridge, TN, https://rsicc.ornl.gov/Catalog.aspx?c=DLC.

7 MATERIALS EVALUATION

7.1 Review Objective

The objective of this U.S. Nuclear Regulatory Commission (NRC) material evaluation is to verify that the applicant has adequately evaluated the materials performance of the transportation package under normal conditions of transport and hypothetical accident conditions necessary to meet the requirements of Title 10 of the *Code of Federal Regulations* (10 CFR) Part 71, "Packaging and Transportation of Radioactive Material."

In conducting the reviews, the NRC reviewer should ensure that materials meet applicable codes, standards, and specifications to support the intended functions of the components under normal conditions of transport and hypothetical accident conditions. The review also includes the evaluation of operations that ensure adequate materials performance, including material qualification, welding, acceptance testing, and inerting of the containment system.

7.2 Areas of Review

The NRC staff should review the application to verify that it adequately describes the package and includes adequately detailed drawings. In general, the staff should review the following information to determine the adequacy of the package description:

- drawings
- codes and standards
  - usage and endorsement
  - American Society of Mechanical Engineers (ASME) Code Component
  - code case use/acceptability
  - non-ASME code components
- weld design and inspection
  - moderator exclusion for commercial spent nuclear fuel (SNF) packages under hypothetical accident conditions
- mechanical properties
  - tensile properties
  - fracture resistance
  - tensile properties and creep of aluminum allows at elevated temperatures
  - impact limiters
- thermal properties of materials
- radiation shielding
  - neutron-shielding materials
  - gamma-shielding materials

- criticality control
    - neutron-absorbing (poison) material specification
    - computation of percent credit for boron-based neutron absorbers
    - qualifying properties not associated with attenuation
- corrosion resistance
    - environments
    - carbon and low allow steels
    - austenitic stainless steel
- protective coatings
    - review guidance
    - scope of coating application
    - coating selection
    - coating qualification testing
- content reactions
    - flammable and explosive reactions
    - content chemical reactions, outgassing, and corrosion
- radiation effects
- package contents
- fresh (unirradiated) fuel cladding
- SNF
    - spent fuel classification
    - uncanned spent fuel
    - canned spent fuel
- bolting material
- seals
    - metallic seals
    - elastomeric seals

7.3 Regulatory Requirements and Acceptance Criteria

Table 7-1 summarizes the sections of 10 CFR Part 71 that are relevant to the materials review and addressed this chapter of the standard review plan (SRP). The reviewer should refer to the language in the regulations and verify the association of regulatory requirements with the areas of review and ensure that no requirements are overlooked as a result of unique design features.

Table 7-1 Relationship of Regulations and Areas of Review for Transportation Packages

Areas of Review	10 CFR Part 71 Regulations											
	71.31	**71.33**	**71.35**	**71.43**	**71.51**	**71.55**	**71.64**	**71.71**	**71.73**	**71.74**	**71.85**	**71.87**
Material description	(a)(1)	●		(c),(d),(f)	(a)(1)	(b),(d),(e),(f)	(a),(b)					
Codes and standards; quality controls	(c)											
Material properties	(a)(1)(2)	●	(a)	(c),(d),(f)	(a)(1)	(b),(d),(e),(f)	(a),(b)	●	●	●	(a)	(a),(b),(c),(f),(g)
Corrosion, chemical reactions, and radiation effects	(a)(2)		(a)	(d),(f)	(a)(1)	(b)(1),(d)(3),(e)(1)(2),(f)		●	●	●	(a)	(a),(b),(c),(f),(g)
Content integrity	(a)(1)(2)	(b)	(a),(c)	(f)	(a)(1)(2)	(b),(d)(2)(4),(e)(1)(2),(f)(1)(2)	(a)	●	●	●		(a),(f)

Note: The bullet (●) indicates the entire regulation as listed in the column heading applies.

Acceptability of the design of the packages used for the transport of radioactive materials, as described in the application, is based on compliance with the requirements of 10 CFR Part 71 and regulatory guidance.

The materials evaluation seeks to ensure that materials will perform in a manner that supports the structural, thermal, containment, shielding, and criticality-control functions of the transportation package, in accordance with the requirements of 10 CFR Part 71, under normal conditions of transport, hypothetical accident conditions, and air-transport conditions, as applicable. The application must contain sufficient information on materials of construction, including their fabrication, evaluation, testing, and special processes. The design and construction of the packaging must identify all applicable codes and standards. Noncode materials must have adequate controls for their qualification and fabrication. Material properties, including mechanical, thermal, shielding, and neutron absorption, should have an adequate technical basis and must demonstrate support for the performance and intended functions of components under normal conditions of transport and hypothetical accident conditions. Materials must not undergo significant chemical, galvanic, or other reactions, or radiation-induced degradation that could challenge the ability of the packaging to safely transport radioactive materials and SNF. The transportation package must be designed and constructed such that the analyzed geometric form of its contents and content characteristics described in SRP section 6.4.2 will not be substantially altered and there will be no loss or dispersal of the contents.

7.4 Review Procedures

The NRC reviewer should ensure that the application adequately describes and evaluates the materials used in the transportation package under normal conditions of transport and hypothetical accident conditions to demonstrate that they meet the requirements of 10 CFR Part 71. Figure 7-1 shows the interrelationship between the materials evaluation and other areas of review described in the SRP. In addition, since the material review is interdisciplinary, the materials reviewer should coordinate with other reviewers (e.g., structural, thermal, shielding, criticality), as necessary, for identification of materials-related issues in other application chapters.

7.4.1 Drawings

General guidance on the content of drawings is provided in Chapter 1, “General Information Evaluation,” of this SRP. Examine the application and verify that the engineering drawings are consistent with the design and description of the package, in accordance with 10 CFR 71.33, “Package Description.” Survey the application and design drawings to identify the various materials used in the packaging design and potential material issues. Use the guidance in NUREG/CR-5502, “Engineering Drawings for 10 CFR Part 71 Package Approvals,” issued May 1999, and Regulatory Guide 7.9, “Standard Format and Content of Part 71 Applications for Approval of Packages for Radioactive Material,” as appropriate, for the recommended content of engineering drawings. Verify that the drawings clearly detail the design features considered in the package evaluation, including the following:

- containment systems
- closure devices
- internal supporting or positioning structures
- neutron absorbing and moderating features affecting criticality

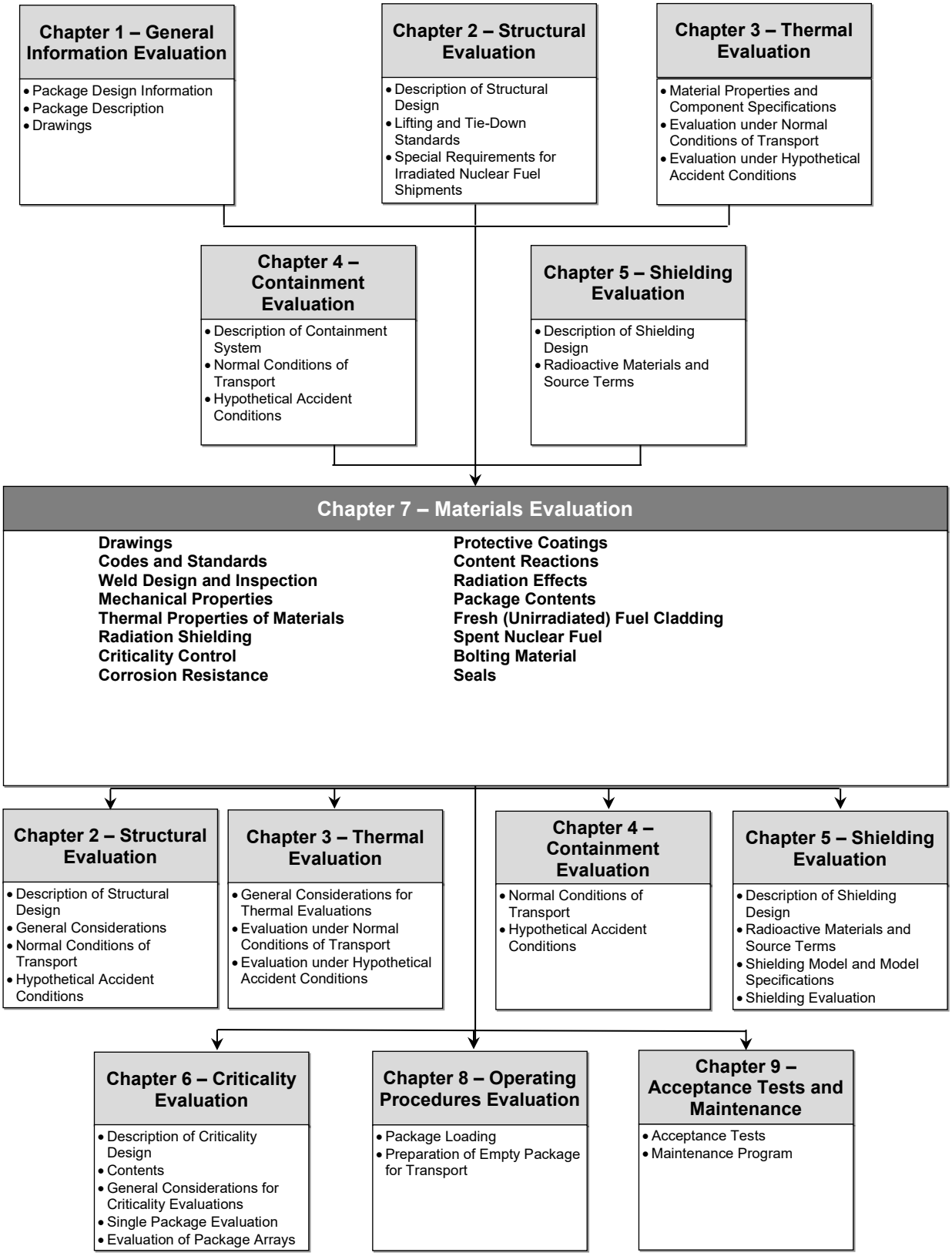

Figure 7-1 Information Flow for the Materials Evaluation

- neutron shielding
- gamma shielding
- outer shell or outer packaging
- heat-transfer features
- impact limiters and energy-absorbing features
- lifting and tie-down devices
- personnel barriers

The information should be sufficient for evaluating the material performance of the packaging components and systems important to safety to meet the regulatory requirements. Refer to NUREG/CR-6407 “Classification of Transportation Packaging and Dry Spent Fuel Storage System Components According to Importance to Safety,” issued February 1996, and NRC Regulatory Guide 7.10, "Establishing Quality Assurance Programs for Packaging Used in the Transport of Radioactive Material," Appendix A, “A Graded Approach to Developing Quality Assurance Programs for Packaging Radioactive Material,” for guidance on safety classification of transportation packaging components. Drawings may include a parts list that identifies the safety classification assigned to each individual component, consistent with the component function and requirements.

Verify that the drawings include the following information:

- materials of construction
- dimensions and tolerances
- codes, standards, or other specifications for materials (e.g., minimum density and minimum hydrogen and boron content for neutron shields and minimum boron-10 areal density for boron-based neutron absorbers), fabrication, examination, and testing
- welding specifications, including location and nondestructive examination (NDE)
- coatings and other special material treatments that perform a safety function
- specifications and requirements for alternative materials

Confirm that the application text and figures that describe the materials are consistent with the engineering drawings.

Verify that standard welding and NDE symbols are included to aid interpretation of the drawings. Standard welding and NDE symbols may be found in American Welding Society (AWS) A2.4, “Symbols for Welding, Brazing, and Nondestructive Testing.”

7.4.2 Codes and Standards

The guidance below describes the materials, codes, and standards the NRC staff finds acceptable for the construction of transportation packages. Confirm that the application identifies any established codes and standards proposed for use in package design, fabrication, assembly, testing, maintenance, and use, in accordance with 10 CFR 71.31(c). Because the guidance adopts portions of nuclear reactor facility codes, exceptions or additions to those codes may be recommended to address unique aspects of transportation package designs.

7.4.2.1 Usage and endorsement

For components of packaging important to safety, ensure that the application specifies the U.S. industry consensus codes and standards, such as the ASME Boiler and Pressure Vessel (B&PV) Code, AWS Codes, American National Standards Institute (ANSI) standards, and American Society for Testing and Materials (ASTM) International standards. Foreign codes and standards generally are not acceptable for components of packaging important to safety and should be approved only on a case-by-case basis. If the application includes foreign codes, verify that they are cross-referenced to appropriate U.S. standards.

Codes and standards frequently reference one another; therefore, be aware of these relationships when verifying their proper use by the applicant. For example, all ASME materials are a subset of AWS and ASTM International materials. However, not all ASTM materials are endorsed for use by ASME or other codes that may be used in storage system designs.

7.4.2.2 ASME code components

As discussed in Section 2.4.1.2 of this SRP, the transportation containment system should be designed and constructed in accordance with the ASME Code Section III, Division 1 or Division 3. Historically, Division 1 has been the accepted portion of the ASME Code.

NUREG/CR-3854, "Fabrication Criteria for Shipping Containers," issued March 1985, describes materials and fabrication criteria that the NRC finds acceptable for the construction of transportation packages. Table 4.1 of NUREG/CR-3854 recommends ASME Code Section III, Division 1, criteria for the fabrication of containment, criticality, and other safety components. For example, for Category I containers (i.e., those that transport SNF), NUREG/CR-3854 recommends that containment components be fabricated in accordance with ASME Code Section III, Division 1, Subsection NB (Class 1) criteria, fuel basket structures be fabricated in accordance with Subsection NG (Core Supports), and other safety structures be fabricated in accordance with Subsection NF (Supports).

The NRC also accepts the use of ASME Section III, Division 3 for the fabrication, welding, examination, testing, inspection, and certification of transportation containment systems. Ensure that the application includes a justification for any deviations from Section III, Division 1 or Division 3 for the containment design or component materials important to safety.

7.4.2.3 Code case use/acceptability

The NRC reviews of the acceptability of ASME code cases are documented in NRC regulatory Guides (RG), including RG 1.193, "ASME Code Cases Not Approved for Use," and RG 1.84, "Design, Fabrication, and Materials Code Case Acceptability, ASME Section III." These regulatory guides are periodically updated (generally about every 2 years). Review any referenced ASME Code Cases against the latest versions of RG 1.193 and RG 1.84 to determine code case acceptability. Table 1 of RG 1.84 provides a list of cases the NRC finds acceptable, while Table 2 of RG 1.84 provides a list of conditionally approved cases. Verify that all of the supplemental requirements are met, in order to provide an acceptable level of quality and safety. Also, examine Tables 3, 4, and 5 of the latest revision of RG 1.84 to ensure that the application does not reference any annulled or superseded codes cases.

7.4.2.4 Non-ASME code components

Components of packaging important to safety that do not comprise the containment boundary may be constructed of materials the ASME, ASTM, or the American Iron and Steel Institute certified. Components of packaging that are not important to safety can be specified by generic names such as “stainless steel,” “aluminum,” or “carbon steel,” provided that the applicant provided sufficient information to evaluate potential impacts that components not important to safety may have on components of packaging important to safety (e.g., galvanic corrosion).

The NRC approves the use of proprietary materials on a case-by-case basis. Ensure that the application describes proprietary materials important to safety (e.g., impact limiter materials, neutron poisons, polymeric neutron shields) to permit the staff to make a safety finding. The Acceptance Tests and Maintenance Program described in the application should incorporate by reference the governing quality assurance and quality control documents, key manufacturing procedures, and key testing protocols for proprietary materials. In the absence of any codes or standards for a special process, verify that the application includes a description of the process, controls, and quality assurance measures.

7.4.3 Weld Design and Inspection

As discussed in Section 7.4.2.2, the transportation containment systems should be designed and constructed in accordance with ASME Code Section III, Division 1 or Division 3. Confirm that the application identifies any established codes and standards proposed for use in package design, fabrication, assembly, testing, maintenance, and use in accordance with 10 CFR 71.31(c). The ASME Code defines required welding criteria, including welding processes, filler metal, qualification procedures, heat treatment, examination, and testing. Refer to the acceptable fabrication criteria for shipping containers in NUREG/CR-3854 along with the relevant portions of the ASME Code to ensure that the application and drawings for the containment boundary and components of packaging important to safety are consistent with the code-required welding criteria.

For containment systems designed in accordance with ASME Code Section III, Division 1, refer to NUREG/CR-3019, “Recommended Welding Criteria for Use in the Fabrication of Shipping Containers for Radioactive Materials,” issued March 1985. This guidance identifies the locations in the ASME Code where the reviewer can find the welding criteria for containment-related, criticality-related (e.g., fuel baskets), and other safety-related welds. For designs that use Division 3 of the ASME Code rather than Division 1, review that section of the ASME Code to identify the corresponding requirements.

Welds that are not associated with a safety function (e.g., not part of the containment boundary or items relied on for criticality safety or shielding) may be governed by the ASME Code, AWS Codes, or American Institute of Steel Construction (AISC) “Manual of Steel Construction” (AISC 1989). AISC standards may, in turn, reference AWS Codes. Similar to the ASME Code, AWS D1.1, “Structural Welding Code-Steel,” and AWS D1.6, “Structural Welding Code-Stainless Steel,” provide detailed welding criteria and weld procedure qualification requirements.

There is no need to verify the presence of specific welding criteria, such as filler metal and weld processes, if the transportation package weld design is consistent with the ASME or AWS Codes and the application and design drawings clearly define the code applicability. The staff considers the ASME and AWS Codes to have been proven to be effective in controlling

qualification methodology, materials, heat treating, inspection, and testing. Note that this guidance is only applicable if the materials of construction also comply with the ASME or AWS Codes. Confirm that the application identifies any established codes and standards proposed for use in package design, fabrication, assembly, testing, maintenance, and use, in accordance with 10 CFR 71.31(c).

7.4.3.1 Moderator exclusion for commercial spent nuclear fuel packages under hypothetical accident conditions

For fissile material packages, 10 CFR 71.55(e) requires that the package be subcritical under hypothetical accident conditions. Verify that the applicant demonstrated that the package remains subcritical by (i) showing that reconfigured fuel is subcritical even with water inleakage or (ii) showing that the package excludes water under hypothetical accident conditions. Thus, the staff has developed options for the evaluations to demonstrate compliance with 10 CFR 71.55(e). Additional guidance for each of these approaches is included in Section 1.4.4 of this SRP.

7.4.4 Mechanical Properties

Assess the acceptability of all material mechanical properties for components of packaging important to safety. Ensure that the mechanical properties account for environmental and operating conditions during normal conditions of transport (hot and cold temperatures) and hypothetical accident conditions, considering also the potential for microstructural changes at elevated temperatures, in order to meet the requirements of 10 CFR 71.33, 71.35(a), 71.51(a) and 71.55(b), (d), (e), and (f) and 71.64, “Special Requirements for Plutonium Air Shipments,” as applicable. Verify that appropriate exposure temperatures and times at which allowable stress limits are defined are consistent with the thermal conditions evaluated in the thermal analysis.

7.4.4.1 Tensile properties

Verify that the application clearly references acceptable sources of all material properties. The properties used in the structural evaluation should be consistent with the design criteria (codes, standards, specifications). For example, if a component is designed to a particular subsection of ASME Code Section III, the material properties and requirements for the component should be consistent with those allowed by that subsection.

For components designed to the ASME Code, acceptable material properties, allowable stresses, temperature limits, and other requirements include those provided in ASME Code Section II, Part A, “Ferrous Metals;” Part B, “Nonferrous Metals;” Part C, “Welding Rods, Electrodes, and Filler Metals;” and Part D, “Properties.” Verify that the application justifies the Code alternatives in order to enable an assessment of their acceptability. Other references (e.g., Military Handbook and ASTM standards) may be used for components not designed to the ASME Code. Verify that the application provides adequately documented material properties and specifications for the design and fabrication of the packaging.

The use of certified material test reports for defining mechanical properties is generally not permissible. These property values may be nonconservative, because samples may be taken at a portion of the ingot, billet, or forging that have optimum materials properties during certification.

7.4.4.2 Fracture resistance

Refer to ASME Section III NB-2300, “Fracture Toughness Requirements for Material,” when evaluating a new package or new material for components of packaging important to safety. Metals having a face-centered cubic crystal structure such as austenitic stainless steels remain tough and ductile to very low temperatures and are not a concern in this regard. Note that ASME Section III NB-2311(a)(7) includes nonferrous material as material for which impact testing is not required. Note, however, that this only applies to nonferrous materials that are included in ASME Section II, Tables 2A and 2B. For some package designs, components that are not part of the containment boundary may use materials that are not included in ASME Section II Tables 2A and 2B. In these cases, determine if fracture toughness testing of these materials is necessary. Materials that provide a structural function should be reviewed to determine adequate resistance to fracture.

Verify that calculated values of fracture toughness using correlation equations based on impact toughness data such as Charpy V-notch toughness are appropriate for the materials considered. Numerous correlations have been developed for pressure vessel steels and other specific alloys (Roberts and Newton 1981). Ensure that the applicant justified the use of a correlation equation that was not developed for the alloy system used for components of packaging important to safety.

<u>Ferritic Steels</u>

Several types of ferritic steels may become brittle at low service temperatures. Section III of the ASME Code contains requirements for material fracture toughness; however, these requirements were developed for reactor components and do not address hypothetical accident conditions for transportation packaging. Therefore, refer to the guidance for fracture toughness criteria and test methods described in RG 7.11, “Fracture Toughness Criteria of Base Material for Ferritic Steel Shipping Cask Containment Vessels with a Maximum Wall Thickness of 4 Inches,” and RG 7.12, “Fracture Toughness Criteria of Base Material for Ferritic Steel Shipping Cask Containment Vessels with a Wall Thickness Greater Than 4 Inches, But Not Exceeding 12 Inches.”

RG 7.11 and RG 7.12 specify the types of tests and data needed to qualify a material for designs that specify ferritic steels other than those listed in the RGs. Those tests and data include dynamic fracture toughness and nil-ductility or fracture appearance transition temperature test data. ASME Section III, as supported by Section IX, governs toughness testing (e.g., Charpy impact) of welds.

<u>Duplex Stainless Steels</u>

Duplex stainless steels have both ferritic and austenitic phases and are susceptible to phase instability that may affect fracture toughness. Verify that the application includes specific qualification testing and acceptance criteria for duplex stainless steel welds that are consistent with the assessment of the critical flaw size. For example, ASTM A923-14 “Standard Test Methods for Detecting Detrimental Intermetallic Phase in Duplex Austenitic/Ferritic Stainless Steels,” may be used to define acceptance criteria for impact toughness testing of base metal, welds, and weld-heat-affected zones.

The NRC has approved duplex stainless steels for the construction of dual-purpose transportable SNF storage canisters, and NUREG-2215, “Standard Review Plan for Spent Fuel

Dry Storage Systems and Facilities," issued November 2017, provides additional guidance for the review of welding practices for these steels.

Aluminum Alloys and Aluminum Metal Matrix Composites

The fracture toughness of traditional aluminum alloys varies widely and is dependent on composition and alloy condition for heat-treated or precipitation-hardened aluminum alloys. Compare the applicant's reported value of fracture toughness to tabulated values in materials handbooks and peer-reviewed publications, as appropriate (e.g., ASM International 1998; Kaufman et al. 1971).

The fracture toughness of aluminum metal matrix composites (MMCs) depends on many factors, including (i) particle composition, (ii) particle size, (iii) particle loading, (iv) particle distribution or clustering, (v) alloy composition, and (vi) thermal treatment for aluminum alloys that can be precipitation hardened. The fracture toughness of aluminum MMC has been found to range from 8 to 30 thousand pounds per square inch (ksi)-in$^{1/2}$ [5.5×10^{7} to 2.1×10^{8} pascal (Pa)] (Flom et al. 1989; Flom and Arsenault 1989; Lewandowski 2000; Miserez 2003; Rabiei et al. 2008). Verify that the applicant has assessed the fracture resistance of aluminum MMCs using valid fracture toughness data. Calculated values of fracture toughness using impact toughness data may be acceptable, provided that the applicant justified the aluminum-specific correlation between the two types of data.

7.4.4.3 Tensile properties and creep of aluminum alloys at elevated temperatures

Verify that the application considers appropriate mechanical properties for aluminum components that have a structural function. Many aluminum alloys, including 2000 series and 6000 series alloys, can be thermally treated to increase yield and tensile strength. For example, Al 6061, a common structural aluminum alloy used in basket assemblies, is precipitation-hardened with magnesium sulfide and is commercially available in several tempers with significantly different yield and tensile strengths and ductility values. Al 6061 is available in pre-tempered grades such as annealed 6061-O and tempered grades such as 6061-T6 and 6061-T651. Both 2000 and 6000 series precipitation-hardened aluminum alloys are used in various basket support components of dual-purpose (storage and transportation) canister designs.

The prolonged effects of elevated temperatures during storage of a dual-purpose canister can affect the properties of precipitation-hardened aluminum alloys. For Al 6061, the allowable stress decreases with increasing temperature for all tempers including T4, T451, T6, and T651. Aging at higher temperature or holding at higher temperature after aging at 320 degrees Fahrenheit (°F) [160 degrees Celsius (°C)] will coarsen the magnesium sulfide precipitates and correspondingly reduce the strength of the alloy (Farrell 1995). Verify that the mechanical properties account for such microstructural changes that affect yield and tensile strength. Note that ASME Section II, Part D, Table 1B requires that time-dependent properties be used for precipitation-hardened Al 6061 at temperatures at or above 350 °F [177 °C].

More recent dual-purpose (storage and transportation) canister designs have specified ever higher design temperatures for the fuel basket components in order to accommodate higher loading densities and higher-burnup fuel. This trend has pushed the various aluminum components into creep regime operating temperatures. Refer to the guidance on the assessment of creep of aluminum components in NUREG-2215, Chapter 8, "Materials Evaluation." The NRC considers the storage system review guidance for creep of aluminum

components of dual-purpose canisters to be appropriate for evaluating the performance of these materials during transportation.

7.4.4.4 Impact limiters

Impact limiters often use special materials such as wood, foam, resin, and honeycomb metals to provide specified crushing characteristics. Verify that the applicant has identified appropriate acceptance testing to assure adequate material properties. Also, verify that the force-deflection properties for all directions evaluated for the packaging are based on test conditions (e.g., strain rate, temperature) that are applicable to the transportation package. Note that the use of unreasonably low material strength values may not be conservative, as this can minimize the decelerations considered in the accident analyses. Testing of the impact limiters may be carried out statically if the effect of strain rate on the material crush properties is accounted for and properly included in the force-deflection relationship for impact analysis.

Impact limiter materials may be temperature and time dependent. In addition, wood and polymeric materials may absorb moisture in service, affecting their properties. Verify that the acceptance testing is sufficient to evaluate the mechanical properties of the impact limiter materials under environmental conditions and temperatures that are expected in service.

7.4.5 Thermal Properties of Materials

Coordinate with the thermal reviewer to determine the properties of the materials important to the thermal analysis. Confirm that the application identifies materials and package components used for heat transfer in accordance with 10 CFR 71.33(a)(5) and (6). Verify the material compositions and thermal properties, such as thermal conductivity, thermal expansion, specific heat, density, and heat capacity, as a function of temperature over the ranges the components experience under the conditions associated with the tests in 10 CFR 71.71, “Normal Conditions of Transport,” and 10 CFR 71.73, “Hypothetical Accident Conditions,” (and other relevant tests for packages for air transport of fissile material or plutonium in accordance with, respectively, 10 CFR 71.55(f) and 10 CFR 71.7, “ Completeness and Accuracy of Information”). Verify that the applicant has evaluated the change in these material properties from material degradation over their service life. Consider, also, the anisotropic dependencies of thermal properties.

7.4.6 Radiation Shielding

Verify that the application describes the compositions and geometries of shielding materials. Steel, lead, depleted uranium, and tungsten typically serve as gamma-shielding materials, while filled polymers are often used for neutron shielding. References for all materials used, including nonstandard materials (e.g., proprietary neutron-shield material), should provide the material composition and density data over the range of temperatures for normal conditions of transport, along with validation of the data. Also, verify that the application describes the geometry of the shielding materials. Coordinate the materials evaluation with the shielding reviewer (Chapter 5, “Shielding Evaluation,” of this SRP) to confirm that the application meets the requirements of 10 CFR 71.43(f), 71.51(a), and 71.64(a), as applicable. Also, in coordination with the shielding reviewer, verify that the applicant has adequately described the acceptance testing conducted for gamma- and neutron-shielding materials, as described in NUREG/CR-3854.

7.4.6.1 Neutron-shielding materials

Confirm that temperature-sensitive neutron-shielding materials (e.g., polymers) will not be subject to temperatures at or above their design limits during normal conditions of transport. Determine whether the applicant properly examined the potential for shielding materials to experience changes in material densities at temperature extremes. For example, elevated temperatures may reduce hydrogen content through loss of water in hydrogenous shielding materials.

With respect to polymeric neutron shields, verify that the application describes the following:

- test(s) demonstrating the neutron-absorbing ability of the shield material
- the testing program, providing data and evaluations that demonstrate the thermal stability of the resin over its design life while at the upper end of the design temperature range
- the nature of any temperature-induced degradation and its effects on neutron-shield performance
- provisions that exist in the neutron shield design to assure that excessive neutron streaming will not occur as a result of shrinkage under conditions of extreme cold. This description is required because polymers generally have a relatively large coefficient of thermal expansion when compared to metals
- any changes or substitutions made to the shield material formulation; how such changes were tested and how that data correlated with the original test data regarding neutron absorption, thermal stability, and handling properties during mixing and pouring or casting
- the acceptance tests conducted to confirm the neutron shield's effectiveness and to verify that any filled channels used on production casks do not have significant voids or defects that could lead to greater-than-calculated dose rates
- the material's ability to withstand the combined aging effects of heat and radiation field

Verify that the application (i) describes the potential for shielding material to experience changes in material properties at temperature extremes, (ii) describes or provides a reference for the temperature sensitivities of shielding materials, (iii) addresses degradation from aging, and (iv) accounts for manufacturing tolerances (both material and dimensional).

7.4.6.2 Gamma-shielding materials

For transportation packaging, steel, depleted uranium, tungsten, cast iron, and lead may be used as gamma radiation shields. Refer to NUREG/CR-3854 for guidance on shield installation and acceptance testing. Collaborate with the shielding reviewer to ensure that the material compositions and densities used in the shielding models are consistent with the design features described in the application. The shielding properties should account for manufacturing tolerances and expected degradation from corrosion reactions, elevated temperature, and accumulated radiation exposure.

Ensure that the application describes the physical dimensions of shielding materials, including seams, penetrations, or voids. For example, lead shielding may be applied by pouring or stacking like bricks or plates and using lead wool to fill gaps. Ensure that the application indicates that manufacturing controls are in place to address any potential paths for gamma streaming. For poured-lead shielding, ensure that the applicant used methods that reduce the possibility of air entrainment in the molten lead during the pouring and removal of the lead froth after pouring.

Some gamma-shielding materials may also undergo degradation at elevated temperatures or under oxidizing conditions. Lead has a relatively low melting point {327 °C [622 °F]}. Verify that the applicant has assessed the potential for lead slumping as a result of loading during normal conditions of transport or from exposure to elevated temperatures.

Coordinate with the shielding and structural reviewers to verify that, for packages that rely on depleted uranium for shielding, the package design ensures that the depleted uranium will not be exposed to the environment (i.e., to air) as a result of the regulatory impact and puncture tests. Depleted uranium exposed to the air for the 10 CFR 71.73 thermal tests can significantly oxidize, resulting in a loss of this material to perform a shielding function. Uranium oxides can have significantly larger volumes than the uranium metal and subsequent volume expansion and may lead to stresses in adjacent packaging components. The formation of uranium hydride can occur when uranium is exposed to moisture under reducing conditions (e.g., in the absence of oxygen). Uranium hydrides in powder form can be pyrophoric. Verify that the package design incorporated features that protect the depleted uranium against oxidation and the formation of uranium hydrides.

7.4.7 Criticality Control

Various materials are used as neutron absorbers for criticality control. Neutron absorbers can consist of alloys of boron compounds with aluminum or steel in the form of sheets, plates, rods, liners, and pellets. Likewise, neutron absorbers can consist of a core containing mixed aluminum and boron carbide (B_4C) particles, clad on both sides with aluminum (a composite). They may also consist of other materials such as cadmium, gadolinium, and silver-indium-cadmium that may or may not be alloyed or mixed with other materials.

Coordinate with the criticality control review to assess the packaging design and the contents specified such that the package is subcritical under the design-basis conditions, normal conditions of transport, and hypothetical accident conditions, in accordance with 10 CFR 71.55(b), (d), and (e), and 10 CFR 71.59, “Standards for Arrays of Fissile Material Packages.” For packages intended for air transport of fissile material or plutonium, ensure that the application includes analyses that consider the most reactive condition of the package and contents, as determined by the tests in 10 CFR 71.55(f) for fissile material or 10 CFR 71.74 for plutonium. While an applicant may also seek to include credit for residual absorber material in irradiated reactor-control components, the criticality reviewer conducts the review of that credit and is not within the scope of the guidance in this section.

7.4.7.1 Neutron-absorbing (poison) material specification

For all absorber materials, verify that the application and its supporting documentation describe the absorber material’s chemical composition, physical and mechanical properties, fabrication process, and minimum poison content. If the applicant intends to use an absorber material with a specific trade name, verify that the application includes the manufacturer’s data sheet to

supplement the above information. In the case of absorber plates or sheets, the application should specify the minimum poison content as an areal density (e.g., milligrams of boron-10 per square centimeter).

Qualification testing of neutron-absorber materials is conducted to ensure the following:

- The material used will have sufficient durability (e.g., compatibility with irradiation and elevated temperatures) for the application for which it has been designed.

- The physical characteristics and the uniformity of the distribution of the absorber material or nuclides (e.g., boron-10) are sufficient to meet the design requirements. Materials that have passed the qualification tests should be acceptance tested (see Chapter 9, "Acceptance Tests and Maintenance Program Evaluation," of this SRP) for use in systems to be employed for transportation. Each production run should be acceptance tested.

The NRC considers ASTM C1671-15, with some exceptions, additions, and clarifications, appropriate for staff use in review activities for boron-based absorbers. Attachment 7A to this SRP chapter provides these exceptions, additions, and clarifications. The use of ASTM C1671 is not a regulatory requirement; alternative approaches are acceptable if technically supported.

7.4.7.2 Computation of percent credit for boron-based neutron absorbers

This section illustrates one method the materials reviewers use to compute the level of credit allowed for neutron-absorber materials in the criticality safety analysis of packages for transporting fissile materials, including fresh nuclear fuel and SNF. The allowed level of credit uses the results of neutron-attenuation measurements performed on samples of the absorber material placed in a beam of thermal neutrons.

The NRC has accepted an upper limit of 90-percent credit to be applied to solid absorbers, meaning that the material is computationally modeled as containing only 90 percent of the absorber nuclides shown to be present. The NRC set this limit to account for the uncertainties arising in extrapolating the validation for absorber materials.

Neutron channeling has been shown to occur in an absorber that uses coarse particles of B_4C dispersed in an aluminum matrix. The nonuniformities and channeling effects further limit the poison credit for heterogeneous absorber materials. For heterogeneous absorber materials, verify the applicant's value for poison credit using the following definitions and equations:

A_a = manufacturer's acceptance value of neutron-absorber density based on neutron-attenuation measurements

T = lower tolerance limit of neutron-absorber density, as calculated in ASTM C1671-15

The value of A_a should be based on a qualified homogeneous absorber standard, such as zirconium diboride, or a heterogeneous calibration standard that is traceable to nationally recognized standards or calibrated with a monoenergetic neutron beam to the known cross section of the absorber nuclide(s) in the absorber material. Calibration standards should be evaluated at 111 percent (i.e., 1/0.90) of the poison areal density assumed in the criticality computational model.

Thus, in addition to the 90-percent limit on poison credit that is used to offset validation uncertainties for all absorbers, the additional penalty for heterogeneous absorbers should be calculated as follows:

If $T \geq A_a$, then 90-percent credit is given

If $T < A_a$, then 75-percent credit is given

If the fractional credit is less than 0.75, the absorber is regarded as unsuitable and should be given no credit. In some cases, where the applicant may seek only a very small fractional credit for the absorber (e.g., 50 percent or less), this amount of credit may be granted with acceptance tests that only ensure proper density and other properties of the absorber in accordance with appropriate standards for fabrication with that absorber material. Such may be the case for unirradiated poison rod assemblies that may need to be inserted with commercial SNF. Coordinate with the criticality reviewer to evaluate such cases.

In order to receive 90-percent credit whether for a homogeneous absorber or a heterogeneous absorber, the presence, uniformity, and effectiveness of the absorber nuclides in the absorber material must be verified by means of a neutron transmission test. Verify that the application demonstrates that the particle sizes of the absorber in the absorber material (e.g., B_4C in a boron-based absorber) are sufficiently fine (diameters on the order of microns) to preclude channeling and nonuniformity effects that occur with absorbers with coarse particles.

7.4.7.3 Qualifying properties not Associated with attenuation

For the qualification of properties not associated with neutron attenuation, the NRC has accepted the following qualification testing in past reviews:

- Mechanical testing, which ensures that the neutron poison material is structurally sound, even if the absorber is not used for structural purposes.

  In the past, the staff has accepted ASTM B557-06, “Standard Test Methods for Tension Testing Wrought and Cast Aluminum- and Magnesium-Alloy Products,” for the tensile testing of samples that demonstrated the following:

  — 0.2-percent offset yield strength no less than 1.5 ksi
  — ultimate strength no less than 5.0 ksi
  — elongation no less than 1 percent

  Alternatively, the staff has accepted bend tests under ASTM E290-14, “Standard Test Methods for Bend Testing of Material for Ductility,” with a 90-degree bend without failure as the passing criteria.

- Porosity measurements, which ensure that the corrosion resistance (which is directly linked to hydrogen generation in the spent fuel pool) of the neutron poison material is maintained, and that the general structural characteristics of the material are controlled.

  The methodology used for control of porosity is at the discretion of the applicant. The acceptance tests and maintenance program should explicitly state limits on both the total porosity of the material and the “open” or “interconnected” porosity of the material. Excluding Boral™, the total open porosity of the neutron poison material should be limited to 0.5 volume percent or less.

The qualification of the Boral™ should address the effects of porosity and material passivation on the susceptibility of Boral™ cladding to blistering from hydrogen generation or flash steaming during short-term loading and drying operations.

- A sufficient number of samples should be used to measure the thermal conductivity of the neutron poison material at room and elevated temperature. Note that clad neutron poison materials are thermally anisotropic.

- For clad materials, the qualifying tests should include a test demonstrating resistance to blistering during the drying process. In the past, the staff has accepted testing where samples of clad materials are soaked in either pure or borated water for 24 hours and then inserted into a preheated oven at approximately 440 °C [825 °F] for a minimum of 24 hours. The samples are then visually inspected for blistering and delamination before undergoing qualifying mechanical testing.

Additional qualifying tests should be conducted for structural neutron poison materials such as aluminum MMCs. Verify that the mechanical and thermal tests include tensile testing, impact testing (or K_{IC} measurements), creep testing, and (if applicable) mechanical testing of weldments over a range of temperatures encompassing normal conditions of transport and hypothetical accident conditions. Numerous ASTM testing standards exist for the measurement of mechanical and physical properties of materials. Confirm that the applicant identified and justified the testing standards used for the mechanical and physical properties of the neutron-absorber materials.

Verify that the application indicates that samples of neutron poison material should be examined (i.e., the use of transmission-electron microscopy or scanning-electron microscopy) for the following changes:

- redistribution or loss of the absorber nuclide (e.g., boron in boron-based absorbers)

- dimensional changes (material instability)

- cracking, spalling, or debonding of the matrix from the absorber nuclide-containing particles

- weight changes caused by leaching, dissolution, corrosion, wear, or off-gassing

- embrittlement

- chemical changes such as oxidation or hydriding

- molecular decomposition of the material as a result of radiation (radiolysis)

Verify that the application indicates that coupons should be taken so as to be representative of the neutron poison material. To the extent practical, test locations on coupons should be stratified to minimize errors because of location or position within the coupon. Locations should include the ends, corners, centers, and irregular locations. These locations represent the most likely areas to contain variances in thickness. Adequate numbers of samples should be taken from components (e.g., plate, rod) produced from a lot to obtain a good representation. A lot is defined as all plates from a single billet. Overall, the coupons should be a representative sample of the material.

For packages that will be loaded or unloaded in a pool or similar environment, verify that the application indicates that absorber material was evaluated or tested for environmental and galvanic interactions and the generation of hydrogen in the pool environment. If environmental testing is employed, the test conditions (time, temperature, and number of cycles) should equal or exceed those expected for loading, unloading, and transfer operations. For environmental tests, the absorber materials should be coupled to dissimilar metals, as may be appropriate to the application. The environment may be borated or deionized water, as appropriate. Verify that the evaluation considers the effects of any residual pool water remaining in the container after removal from the pool. Generally, for common engineering materials, an evaluation based on consultation of a corrosion reference (galvanic series) should suffice for pool loading and unloading situations.

Ensure that the applicant took appropriate measures to assess the strength or ductility of the material, depending on the structural requirements of the application.

Coordinate with the criticality and acceptance tests and maintenance program reviewers to ensure that the acceptance test section of the application includes appropriate qualification and acceptance tests for neutron-absorber materials, as described in this SRP chapter.

7.4.8 Corrosion Resistance

The following subsections address specific considerations for commonly used materials for packaging components and systems important to safety that may be exposed to environments where the effects of corrosion should be considered. Confirm that the applicant has identified materials and package components and assessed the effects of corrosion, chemical reactions, and radiation effects, in accordance with 10 CFR 71.35(a) and 10 CFR 71.43(d). In addition to material selection, the application may use other corrosion-control measures, provided that adequate documentation is supplied to demonstrate efficacy. For example, coatings may be specified to alleviate atmospheric corrosion issues. However, unless supporting data are available to demonstrate the predicted coating life, the coating should be periodically inspected and maintained. Verify that the application addresses maintenance in the acceptance tests and maintenance program for coatings relied on for preventing corrosion of packaging components, to ensure unimpaired physical condition, in accordance with 10 CFR 71.87(b).

For components that have been previously in service under a 10 CFR Part 72, “Licensing Requirements for the Independent Storage of Spent Nuclear Fuel, High-Level Radioactive Waste, and Reactor-Related Greater Than Class C Waste,” storage license (e.g., dual-purpose cask systems, transportable storage canisters for commercial SNF), evaluate the cumulative effects of corrosion during storage and transportation on the ability of the package to fulfill its important-to-safety functions under normal conditions of transport and hypothetical accident conditions. During the storage term, these components may have been exposed to a variety of environments associated with content loading, drying, inerting, container transfer, storage during the initial license, and renewed storage during a period of extended operation. Refer to NUREG-2215 and NUREG-2214, “Managing Aging Processes in Storage (MAPS) Report,” for additional detail on corrosion processes relevant to commercial SNF storage systems in the initial and renewed storage terms, respectively. The corrosion of components that have been in service under a renewed storage license likely is addressed by an NRC-approved aging management program. Evaluate whether storage aging management programs and other maintenance activities should be augmented with pre-transportation inspections and tests to ensure important-to-safety functions are fulfilled during transportation.

7.4.8.1 Environments

The corrosion rates of materials are dependent on a number of factors, including humidity, time of wetness, atmospheric contaminants, and oxidizing species (Fontana 1986). Consider the range of environmental conditions that are encountered for the components of packaging that are important to safety.

Corrosion rates for engineering alloys, including carbon and low-alloy steels, stainless steels, and aluminum alloys in a range of natural and industrial environments, may be found in corrosion references (e.g., Fontana and Greene 1978; Graver 1985; Revie and Uhlig 2008; Revie 2000; ASM 2000). Additional information on alloys and materials in specific environments is available in specialized publications such as the ASTM Special Technical Publications series. The National Aeronautics and Space Administration (NASA) Kennedy Space Center Corrosion Technology Laboratory has also issued numerous reports on corrosion of alloys exposed to marine environments as well as testing of coatings to prevent corrosion.

Evacuating the transportation package and backfilling with an inert gas such as helium will significantly reduce the water content, humidity, and oxidizing potential of the environment. The inert low humidity inside the backfilled transportation package will significantly decrease the uniform corrosion rate of carbon steel as well as reduce the potential for localized corrosion of passive alloys such as stainless steels.

7.4.8.2 Carbon and low-alloy steels

Corrosion rates for carbon and low-alloy steels are dependent on the exposure environment. Corrosion rates for these materials may be found in the corrosion references discussed in Section 7.4.8.1 of this SRP chapter.

For packaging components and systems important to safety that are constructed from carbon or low-alloy steels, control measures may be employed to reduce the loss of material as a result of corrosion. For example, coatings may be specified to prevent atmospheric corrosion. However, as described in greater detail in Section 7.4.9 of this SRP chapter, such coatings should be periodically inspected and maintained. Verify that the application addresses coating inspection and maintenance in the acceptance tests and maintenance program for any coatings that are relied upon for preventing corrosion of packaging, components, and systems important to safety.

7.4.8.3 Austenitic stainless steel

When stainless steel is used for transportation packages, the primary concern is not general corrosion but rather various types of localized corrosion, such as pitting, or crevice, corrosion and stress corrosion cracking. These corrosion mechanisms are possible in environments that contain chlorides. Localized corrosion and chloride-induced stress corrosion cracking (CISCC) of stainless steel components exposed to marine environments have been observed at operating reactors (NRC 2012). Based on testing and reviews of operational experience, degradation of austenitic stainless steels as a result of CISCC is expected to be limited to welded structures with tensile residual stresses in environments with elevated airborne chloride concentrations.

Sensitization of austenitic stainless steels is caused by thermal exposures that result in the formation of carbides at grain boundaries that deplete the concentration of chromium in the

grain-boundary region. The chromium-depleted grain-boundary regions are more susceptible to corrosion, particularly intergranular corrosion and intergranular stress-corrosion cracking. Sensitization of austenitic stainless steels during fabrication can be avoided by specifying low carbon stainless steel grades (including welding consumables).

For transportation packaging that may be susceptible to localized corrosion or CISCC, verify that the system maintenance and operating procedures address the potential for degradation.

7.4.9 Protective Coatings

Coatings in transportation packages are used primarily as corrosion barriers or to facilitate decontamination. They may have additional roles, such as improving the heat-rejection capability by increasing the emissivity of the transportation package internal components. No coating should be credited for protecting the substrate material or extending the useful life of the substrate material unless a periodic coating inspection and maintenance program is required for the coating. Confirm that the applicant has identified coating materials package components coated and has assessed the effects of corrosion, chemical reactions, and radiation effects, as required by 10 CFR 71.35(a) and 10 CFR 71.43(d).

The NRC established this section of this SRP to alleviate confusion regarding coatings for transportation package components. Use discretion in implementing the detailed review guidance in this section. This section outlines methods and procedures for appropriately assessing coatings. The assessment covers several areas in detail, including the scope of the coating application, type of coating system, surface-preparation methods, applicable coating-repair techniques, and coatings qualification testing.

7.4.9.1 Review guidance

Verify the appropriate application of the coating(s) by reviewing the coating specifications. A specification that describes the scope of the work, required materials, the coating's purpose, and key coating procedures should ensure that appropriate and compatible coatings have been selected for the transportation package design.

7.4.9.2 Scope of coating application

Verify that the coating specification identifies the purpose of the coating, lists the components to be coated, and describes the expected environmental conditions (e.g., expected conditions during loading, unloading, transportation, and dry storage of commercial SNF packages that have been in dry storage or have components that have been in dry storage).

Verify that the coatings will not react with the package internal components and contents and will remain adherent and inert when the transportation package is exposed to the various environments during transportation and loading and unloading operations.

7.4.9.3 Coating selection

Verify that the coating specification identifies the manufacturer's name, the type of primers and topcoat used in the coating system, and the minimum and maximum dry coating thickness. Because of the unique nature of coating properties and coating-application techniques, the manufacturer's literature may be the only source of information on the particular coating.

Verify that the coating selected for transportation package components is capable of withstanding the intended service conditions during transportation, loading, and unloading activities and the regulatory tests conditions. Failures can be prevented by ensuring that the selection and the application of the coating are controlled by adhering to the coating manufacturer's recommendations for surface preparation, coating application, and coating repairs.

7.4.9.4 Coating qualification testing

Any coating (including paints or plating) used for a transportation package must have been tested to demonstrate the coatings performance under all conditions of loading and transportation, including the regulatory test conditions. The conditions evaluated should include exposure to radiation, unloading, and transfer operations.

There are a number of standardized ASTM tests for coatings performance. In reviewing ASTM (or other) tests used to qualify coatings for service in transportation packages, consider the applicability of a test to the conditions identified above.

7.4.10 Content Reactions

Review the materials and coatings of the transportation package to verify that they will not produce significant chemical or galvanic reactions among packaging contents or between the packaging components and the packaging contents. Confirm that the applicant has identified the contents of the package in accordance with 10 CFR 71.33(b); demonstrated that the package meets the requirements of 10 CFR 71.35(a); and assessed the effects of corrosion, chemical reactions, and radiation in accordance with 10 CFR 71.43(d).

Verify that the applicant has provided an adequate description of the contents such that the stability and compatibility with the packaging components can be fully evaluated. Key parameters include the environment inside the packaging to which the contents are exposed, including requirements for dryness or use of inert gases, physical and chemical form (e.g., activated metal, process waste), the geometric form (e.g., particulates, bulk solid), the maximum quantity of radioactive materials to be transported, and the radionuclide inventory.

7.4.10.1 Flammable and explosive reactions

Verify that the applicant has demonstrated that the contents will not lead to potentially flammable or explosive conditions.

Metallic contents may be subject to pyrophoricity, or auto-ignition, when the content surface area is sufficiently large (e.g., fine particulates) and oxygen or humidity (or both) are present at elevated temperatures. If metallic contents could potentially support pyrophoricity, confirm that the application demonstrates that measures are taken to remove moisture or oxygen from the container, such as through vacuum or inerting. Liquid contents that contain water may be subject to water radiolysis, producing a flammable mixture of hydrogen and oxygen. Ensure that the applicant considered the potential for content materials, such as polymers, to decompose when exposed to heat and radiation, which may generate the moisture to support pyrophoricity as well as produce flammable hydrogen and oxygen mixtures. Coordinate with the containment and thermal reviewers to assess the potential for flammable gas generation.

In addition, hydrogen or other flammable gases may be generated during wet loading and unloading operations. Verify that the operating procedures for wet loading and unloading operations contain measures for detecting the presence of hydrogen and preventing the ignition of combustible gases during package loading and unloading operations. The Package Operations section of the application should include these procedures.

NRC Bulletin 96-04, "Chemical, Galvanic, or Other Reactions in Spent Fuel Storage and Transportation Casks," documents known operational issues associated with hydrogen generation. This bulletin describes a case where a zinc coating on a canister interior reacted with borated spent fuel pool water to generate hydrogen, which ignited during the canister closure welding. Confirm that the applicant has demonstrated that no such adverse reactions will occur among the canister content materials, fuel payload, and the operating environments.

7.4.10.2 Content chemical reactions, outgassing, and corrosion

For metallic components of the package that may come into physical contact with one another, confirm that the application considers the possibility of eutectic reactions since such reactions can lead to melting at the interface between the metals at a lower temperature than the melting points of the metals in contact. Such interactions may occur with depleted uranium, lead, or aluminum in contact with steel. If applicable, verify that the applicant has evaluated the potential formation of, and has employed methods to prevent, eutectic reactions.

Ensure that the applicant considered the potential for outgassing of the contents and components in the evaluation of the maximum operating pressure. Outgassing may originate from moisture retained in wood used for dunnage or contaminated sources. Polymers and greases may also outgas under vacuum or at elevated temperatures. NASA has published a data compilation of outgassing data on a wide range of materials (Campbell and Scialdone 1993). NASA-developed testing led to the development of ASTM E595, "Total Mass Loss (TML) and Collected Volatile Condensable Materials (CVCM) from Outgassing in a Vacuum Environment." Verify that the applicant used standard test methods such as ASTM E595 for outgassing data provided by a material vendor.

Corrosive reactions between the contents and the internal environment, as well as reactions between the contents and the package components, may degrade structural integrity and containment. Verify that the applicant demonstrated that corrosion wastage will not lead to a loss of intended functions.

For nonfuel hardware contents in commercial SNF packages, the NRC has previously reviewed a number of hardware components and materials to ensure that there are no significant chemical, galvanic, or other reactions as a result of exposure of these various contents to the wet loading and the package's internal environment. These include components encased in stainless steel and aluminum alloys such as neutron-source assemblies, burnable poison rod assemblies, thimble-plug devices, and other types of control elements. The NRC has found the following components to be acceptable for transportation when the canister is constructed of stainless steel with stainless steel and aluminum basket components:

- neutron-source materials encased in stainless steel or zirconium alloy cladding containing antimony-beryllium, americium-beryllium, plutonium-beryllium, polonium-beryllium, and californium

- control elements encased in zircaloy or stainless steel cladding containing B_4C, borosilicate glass, silver-indium-cadmium alloy, or thorium oxide

Ensure that the applicant evaluated any nonfuel hardware components with damaged cladding that exposes the contents such as a burnable poison material or neutron source on a case-specific basis.

7.4.11 Radiation Effects

Exposure of materials to radiation can cause microstructural changes that alter mechanical properties and reduce resistance to environmentally induced degradation such as stress corrosion cracking. The effect of radiation exposure is dependent on several factors, primarily the material composition, the type of radiation, and the duration of radiation exposure. Polymeric materials are affected by gamma radiation. Metals and alloys are generally resistant to gamma radiation but are affected by neutron radiation. Confirm that the applicant demonstrated that the package meets the requirements of 10 CFR 71.35(a) and assessed the effects of radiation in accordance with 10 CFR 71.43(d). The following paragraphs provide a brief summary of radiation effects on commonly used materials in transportation packaging systems. Review the references in the following paragraphs for more detailed information.

For alloy steels, measurable changes to mechanical properties are not observed with a neutron fluence below 10^{17} n/square centimeter (cm^2) [6.5×10^{17} n/square inch (in^2)] (10 CFR Part 50, "Domestic Licensing of Production and Utilization Facilities," Appendix H, "Reactor Vessel Material Surveillance Program Requirements"). Nikolaev et al. (2002) and Odette and Lucas (2001) reported that neutron fluence levels greater than 10^{19} n/cm^2 [6.5×10^{19} n/in^2] have been found to be required to produce measurable degradation of mechanical properties including increased tensile and yield strength and decreased toughness.

For stainless steels, neutron irradiation can cause changes in stainless steel mechanical properties such as loss of ductility, fracture toughness, and resistance to cracking (Was et al. 2006). Gamble (2006) found that neutron fluence levels greater than 1×10^{20} n/cm^2 [6.5×10^{20} n/in^2] are required to produce measurable degradation of the mechanical properties. Caskey et al. (1990) also indicate that neutron fluence levels of up to 2×10^{21} n/cm^2 [1×10^{22} n/in^2] were not found to enhance stress-corrosion cracking susceptibility.

Farrell and King (1973) reported the effects of neutron irradiation on aluminum alloys and showed that fluences greater than 10^{20} n/cm^2 [6.5×10^{20} n/in^2] were necessary to have marked increases in yield or tensile strengths or a decrease in measured ductility.

Radiation exposure is known to cause changes in physical properties of polymers and elastomers (NASA 1970; Bruce and Davis 1981; Lee 1985; Battelle 1961). Bruce and Davis (1981) summarized the lowest reported threshold exposures for material properties of a number of organic materials used in nuclear power plants. The threshold for degradation of natural rubber occurs when the dose reaches 2×10^4 grays (Gy) [2×10^6 rads]. Butadiene, nitrile, and urethane rubber have a threshold of 10^4 Gy [10^6 rads]. Fluoroelastomers have a reported threshold dose of 10^3 to 10^4 Gy [10^5 to 10^6 rads]. Some fluoropolymers such as tetrafluoroethylene have been shown to be susceptible to radiation damage at a dose of 200 Gy [2×10^4 rads] (NASA 1970).

Coordinate with the shielding reviewer to determine the neutron-fluence rate or the gamma-dose rate, as applicable, for the different package components. Verify that the applicant

appropriately considered any damaging effects of radiation on the transportation package materials. These effects may include degradation of seals, sealing materials, coatings, adhesives, and structural materials. Verify that the package operations and package maintenance program descriptions assure the maintenance or replacement of components susceptible to radiation damage before attaining a neutron fluence or gamma dose that degrades the components' performance.

7.4.12 Package Contents

Ensure that the application provides an adequate description of the chemical and physical form of the package contents (e.g., canistered vitrified high-level waste, radiation sources). Confirm that the applicant has identified the contents of the package in accordance with 10 CFR 71.33(b); demonstrated that the package meets the requirements of 10 CFR 71.35(a); and assessed the effects of corrosion, chemical reactions, and radiation effects in accordance with 10 CFR 71.43(d). Assess if there are materials and other properties of the contents (e.g., that lead to corrosion, radiolysis, and hydrogen generation) that may affect the intended functions of the package during normal conditions of transport and hypothetical accident conditions, as discussed in Sections 7.4.10 and 7.4.11 of this SRP chapter. Coordinate with other reviewers as needed to understand the contents properties in addition to the physical properties that may affect package intended functions. See the section in Attachment 7A to this SRP relevant to the package and contents type under review for guidance regarding concerns unique to that package and contents type. For SNF packages, refer to Section 7.4.14 of this SRP chapter for guidance unique to SNF contents.

7.4.13 Fresh (Unirradiated) Fuel Cladding

Confirm that the mechanical properties of the cladding materials are adequate to ensure that the fresh (unirradiated) fuel remains in the configuration analyzed in the application, in accordance with the requirements of 10 CFR 71.35(a). In addition, confirm that the applicant has identified the contents of the package, in accordance with 10 CFR 71.33(b).

Ensure that the structural evaluation is bounding to all cladding alloys in the allowable contents (i.e., Zircaloy-2, Zircaloy-4, ZIRLO™, M5®). Verify that the application provides a justification that the cladding mechanical properties are bounding upon consideration of alloy type and fabrication process (cold work stress relieved annealed, recrystallized annealed) and cladding temperature.

Preferred sources of cladding materials data include standards and codes (e.g., ASTM B351-13/B351M); manufacturer's test data obtained under an approved quality assurance program; NRC-approved topical reports; staff-accepted technical reports; and peer-reviewed articles, research reports, and texts. Ensure that the application adequately justifies the applicability and acceptability of any source of information.

Multiple aluminum alloys have been used for aluminum clad fuel including: 1100, 5052, 5456, 6061, and 8001. The mechanical properties of these alloys are dependent on the heat treatment used in material production. Ensure that the mechanical properties of these cladding alloys are based on manufacturer-provided data. Mechanical properties of many aluminum alloys as a function of temperature are included in ASME B&PV Code Section II Part D.

Types 304, 304L, and 348 stainless steels were originally used as nuclear fuel cladding and were replaced by zirconium alloys starting in the 1960s. Specific information on the fuel

designs; physical properties of the stainless steel cladding materials; and mechanical properties, including those of the irradiated stainless steel cladding, are described in Electric Power Research Institute (EPRI) Report NP-2642.

7.4.14 Spent Nuclear Fuel

Confirm that the mechanical properties of the cladding materials are adequate to ensure that the SNF remains in the configuration analyzed in the application over the ranges of conditions associated with the tests in 10 CFR 71.71 and 10 CFR 71.73. In addition, confirm that the applicant has identified the contents of the package in accordance with 10 CFR 71.33(b). The review guidance in this section for commercial power plant operations addresses the transport of all SNF of burnups the NRC currently licenses. Applications with burnup levels exceeding those the Office of Nuclear Reactor Regulation (NRR) licensed, or for cladding materials NRR did not license, may require additional justifications.

7.4.14.1 Spent fuel classification

Verify that the application and the certificate of compliance (CoC) identify the allowable SNF contents and condition of the assembly and rods (i.e., intact, undamaged or damaged fuel—refer to the SRP Glossary).

Verify that the applicant considered whether the material properties of the SNF assemblies can be altered during prior dry storage. If this alteration is significant enough to prevent the fuel or assembly from performing its intended functions during transport, then ensure that the fuel assembly is classified as damaged.

Ensure that the application discusses all of the following conditions to support whether the SNF (rods and assembly) to be loaded is intact or undamaged:

- the acceptable physical characteristics of the SNF (i.e., acceptable assembly defects and cladding breaches)
- the intended functions the applicant has imposed on the SNF for demonstrating compliance with fuel-specific and package-related regulatory requirements
- the alteration and degradation mechanisms of the SNF during transport (or during prior dry storage) that could credibly compromise the ability to meet fuel-specific or package-related functions
- discussions or analyses demonstrating that the mechanisms in the immediately preceding bullet will not reasonably affect the physical characteristics of the SNF (as defined in the first bullet) or result in reconfiguration beyond the safety analyses in the application

Recognize that SNF assemblies with any of the following characteristics, as identified during the fuel-selection process (see Attachment 7B to this SRP chapter), are expected to be classified as damaged, unless the applicant provides an adequate justification:

- There is visible deformation of the rods in the SNF assembly. This is not referring to the uniform bowing that occurs in the reactor; instead, this refers to bowing that significantly opens up the lattice spacing.

- Individual fuel rods are missing from the assembly. The assembly may be classified as intact or undamaged if the missing rod or rods do not adversely affect the structural performance of the assembly, radiological safety, and criticality safety (e.g., no significant changes to rod pitch). Alternatively, the assembly may be classified as intact or undamaged if a dummy rod that displaces a volume equal to, or greater than, the original fuel rod is placed in the empty rod location.

- The SNF assembly has missing, displaced, or damaged structural components resulting in the following:

  — Radiological and/or criticality safety is adversely affected (e.g., significantly changed rod pitch).

  — The structural performance of the assembly may be compromised during normal conditions of transport or under hypothetical accident conditions.

- Reactor operating records or fuel-classification records indicate that the SNF assembly contains fuel rods with gross breaches.

- The SNF assembly is no longer in the form of an intact fuel bundle (e.g., consists of, or contains, debris such as loose fuel pellets or rod segments).

Recognize that defects such as dents in rods, bent or missing structural members, small cracks in structural members, and missing rods do not necessarily render an assembly as damaged, as long as the applicant can show that the intended functions of the assembly are maintained; that is, the performance of the assembly does not compromise the ability to meet fuel-specific and package-related regulations.

The NRC considers a gross cladding breach as any cladding breach that could lead to the release of fuel particulate greater than the average size fuel fragment. A pellet is approximately 1.1 centimeters [0.43 inches] in diameter in 15x15 pressurized-water reactor (PWR) assemblies. Pellets from a boiling-water reactor (BWR) are somewhat larger, and those from 17x17 PWR assemblies are somewhat smaller. In general, a pellet's length is slightly longer than its diameter. During the first cycle of irradiation in-reactor, the pellet fragments into 25 to 35 smaller interlocked pieces, plus a small amount of finer powder, from pellet-to-pellet abrasion. When the rod breaches, about 0.1 gram [0.003 ounce] of this fine powder may be carried out of the fuel rod at the breach site (NRC 1981). Modeling the fragments as either spherical- or pie-shaped pieces indicate that a cladding-crack width of at least 2 to 3 millimeters [0.08 to 0.11 inch] would be required to release a fragment. Hence, gross breaches should be considered to be any cladding breach greater than 1 millimeter.

7.4.14.2 Uncanned spent fuel

The review procedures in this section apply to undamaged or intact SNF that is not placed inside a separate fuel can in the transportation package containment (or canister for canister-based packages); that is, the safety analyses rely on the integrity of the fuel cladding for maintaining the analyzed configuration.

Cladding Alloys

Identify the specific cladding alloys (e.g., Zircaloy-2, Zircaloy-4, ZIRLO™, M5®, Aluminum 1100, Type 304 Stainless Steel) and maximum burnup of the SNF to be stored. The NRC considers the peak rod average burnup as an appropriate measure of maximum fuel burnup in the materials evaluation. Ensure that the fuel and cladding alloy contents are consistent with the technical bases in the structural evaluation.

Determine if the SNF to be stored includes boron-based integral fuel burnable absorbers. Note that these rods have the potential to increase the fuel rod internal pressure from decay-gas generation (helium), which should be considered when evaluating the consequences of aging mechanisms during dry storage before transport, particularly for dry storage periods beyond 20 years. Note also that decay gases are not generated in rods with gadolinium-based integral fuel burnable absorbers, which will not result in increased rod pressures beyond those the fuel fission products generate.

Zirconium Alloy Cladding Mechanical Properties

Ensure that the structural evaluation is bounding to all cladding alloys in the allowable contents (i.e., Zircaloy-2, Zircaloy-4, ZIRLO™, M5®, Aluminum 1100, Type 304 Stainless Steel). Verify that the application provides a justification that the cladding mechanical properties are bounding upon consideration of alloy type, fabrication process (cold work stress relieved annealed, recrystallized annealed), hydrogen content, neutron fluence (burnup), oxide thickness, and cladding temperature.

Recognize that the applicant may use mechanical properties of as-irradiated/in-reactor or pre-hydrided/irradiated cladding (i.e., not accounting for the potential reorientation of hydrides at elevated temperatures that may be reached during loading and drying operations) in the structural evaluation of the SNF assembly. Alternatively, the applicant may use mechanical properties of cladding, accounting for reoriented hydrides in the structural evaluation of the SNF assembly. However, to date, the database for these properties is very limited.

Preferred sources of cladding materials data include manufacturer's test data obtained under an approved quality assurance program; NRC-approved topical reports; staff-accepted technical reports; and peer-reviewed articles, research reports, and texts. Ensure that the application adequately justifies applicability and acceptability of any source of information.

While the NRC deems acceptable the mechanical property models from PNL-17700, "PNNL Stress/Strain Correlation for Zircaloy," issued July 2008 (Geelhood et al. 2008), for previous licensing and certification actions, note that the determination of acceptability should consider the limitations of these models based on the data used for model validation (refer to Chapter 5 of PNL-17700 for additional details). Note that the models in PNL-17700 were validated with experimental measurements on Zircaloy-4, Zircaloy-2, and ZIRLO™ cladding. Therefore, ensure that the applicant referred to other references for defining bounding mechanical properties for M5® cladding. Limited, nonproprietary data are available for M5® cladding, such as the publicly available data from the French Competent Authority (Institut de Radioprotection et de Sûreté Nucléaire). Ensure that the application justifies that the limited temperature-dependent M5® cladding property data are reasonably bounding upon consideration of hydrogen content, neutron fluence (burnup), oxide thickness, and cladding temperature. Coordinate with the structural reviewer to ensure that there is adequate safety margin in the respective vibration and drop analyses to ensure that the assumed properties are

adequate. Consider using engineering judgment from the staff's findings on previous NRC-approved topical reports.

Confirm that the application justifies that the assumed hydrogen content and neutron fluence is adequately bounding to the maximum burnup of the cladding contents (refer to Chapter 5 of PNNL-17700 for additional details). In addition, ensure that application justifies the assumed temperature for the cladding mechanical properties. For example, the applicant may choose to use cladding mechanical properties corresponding to the maximum fuel assembly temperature at the location of the peak stress identified in the dynamic drop analysis.

Recognize also that the models PNL-17700 references only account for mechanical properties of cladding with circumferential hydrides. The NRC staff recognizes that the public database of mechanical properties of materials with both circumferential and radial hydrides is very limited (e.g., Kim et al. 2015). However, based on static bend testing of cladding with a high density of radial hydrides discussed elsewhere, the staff considers these mechanical properties adequate for the design-basis drop scenarios during normal conditions of transport and hypothetical accident conditions. Additional considerations for the certification of transportation packages containing high-burnup fuel are provided in a separate technical report.

<u>Effective Zirconium Alloy Cladding Thickness</u>

Cladding Oxidation

The structural evaluation should account for the reduced effective thickness of the cladding from waterside corrosion (i.e., oxidation) during reactor service. The cladding oxide should not be considered load-bearing in the structural evaluation. The extent of oxidation and cladding wall thinning depends on the composition of the cladding (type of alloy) and burnup of the fuel. The oxide will differ for the various cladding alloys and will not be of a uniform thickness along the axial length of the fuel rods. Ensure that the application defines an effective cladding thickness that is reduced by a bounding oxide layer to the specific cladding contents to be transported. Verify that the applicant has used a value of cladding oxide thickness that is justified by experimental oxide thickness measurements, computer codes validated using experimentally measured oxide thickness data, or other means that the NRC staff finds appropriate. In NUREG/CR-7022, "FRAPCON-3.5: A Computer Code for the Calculation of Steady-State, Thermal-Mechanical Behavior of Oxide Fuel Rods for High Burnup," issued October 2014, the staff determined that the waterside corrosion models in the computer code FRAPCON 3.5 are acceptable for calculating oxide thickness values for Zircaloy-2, Zircaloy-4, ZIRLO™, and M5® cladding.

Hydride Rim

During reactor irradiation, some of the hydrogen generated from waterside corrosion of the cladding will diffuse into the cladding. This results in the precipitation of hydrides in the circumferential-axial direction of the cladding when the amount of hydrogen generated exceeds the solubility limit in the cladding. The circumferential orientation of the hydrides is related to the texture of the manufactured cladding. The number density of these circumferential hydrides varies across the cladding wall because of the temperature drop from the fuel side (hotter) to the coolant side (cooler) of the cladding during reactor operation. Further, migration and precipitation of dissolved hydrogen to the coolant side of the cladding results in a rather dense hydride rim just below the corrosion (oxide) layer. The hydride number density and thickness of the rim depend on reactor operating conditions. For example, fuel rods operated at high linear

heat rating to high burnup generally have a very dense hydride rim that is less than 10 percent of the cladding wall thickness. Conversely, fuel rods operated at low linear heat ratings to high burnup have a more diffuse hydride distribution that could extend as far as 50 percent of the cladding wall.

Recognize that the applicant may have conservatively considered the cladding's outer hydride rim as wastage when determining the effective cladding thickness for the structural evaluation. However, there is no reliable predictive tool available to calculate this rim thickness, which varies along the fuel-rod length, around the circumference at any given axial location, from fuel rod to fuel rod within an assembly, and from assembly to assembly. Further, ring compression test results from Argonne National Laboratory (ANL) indicate that for the range of gas pressures anticipated during drying, storage, and transportation, the hydride rim remains intact following slow cooling under conditions of decreasing pressure (Billone et al. 2013, 2014, 2015). These results indicate that the hydride rim is load bearing and can be accounted for in the effective cladding thickness calculation, as long as mechanical test data referenced in the structural evaluation has adequately accounted for its presence. Historically, this has been the case during the review of the transportation package, as applicants have provided mechanical property data generated from tests with irradiated cladding samples with an intact hydride rim. This includes test data derived from axial tensile tests or pressurized tube tests of samples without a machined gauge section. For example, the mechanical property models used in PNL-17700 have been validated with experimental data from axial tensile tests on full cladding tubes and ring tests with no machined gauge section taken on irradiated recrystallized annealed Zircaloy-2 and Zircaloy-4 and stress-relief annealed ZIRLO™ cladding. As such, the staff considers any previous consideration to treat the rim as wastage to be unnecessary when calculating the effective cladding thickness, as the hydride rim has been properly accounted for in the mechanical property models.

Drying Adequacy

Evaluate the descriptions related to draining and drying of the containment cavity or, for canister-based packages, the canister cavity of the transportation package during SNF loading operations, as discussed in the Operating Procedures section of the application. More specifically, assess whether the procedures used for removing water vapor and oxidizing material to an acceptable level are appropriate.

The NRC staff have accepted vacuum drying methods comparable to those recommended in PNL-6365, "Evaluation of Cover Gas Impurities and Their Effects on the Dry Storage of LWR Spent Fuel," issued November 1987 (Knoll and Gilbert, 1987). This report evaluates the effects of oxidizing impurities on the dry storage of light-water reactor (LWR) fuel and recommends limiting the maximum quantity of oxidizing gases (e.g., oxygen, carbon dioxide, and carbon monoxide) to a total of 1 gram-mole per cask. This corresponds to a concentration of 0.25 volume percent of the total gases for a 7.0 cubic meter [about 247 cubic foot] cask gas volume at a pressure of about 0.15 megapascal (MPa) [1.5 atmosphere (atm)] at 300 °Kelvin (K) [80.3 °F]. This 1 gram-mole limit reduces the amount of oxidants to below levels where cladding degradation is expected. Moisture removal is inherent in the vacuum-drying process, and levels at or below those evaluated in PNL-6365 (about 0.43 gram-mole of water) are expected if adequate vacuum drying is performed.

If methods other than vacuum drying are used (such as forced helium recirculation), ensure that the application provides additional analyses or tests to sufficiently justify that moisture and impurity levels of the fuel cover gas will prevent unacceptable cladding degradation. The

procedures should reflect the potential for blockage of the evacuation system or masking of defects in the cladding of nonintact rods as a result of icing during evacuation. Icing can occur from the cooling effects of water vaporization and system depressurization during evacuation. Icing is more likely to occur in the evacuation system lines than in the containment (or canister) cavity of the transportation package because of decay heat from the fuel. A staged drawdown or other means of preventing ice blockage of the package evacuation path may be used (e.g., measurement of package (or canister) pressure not involving the line through which the package (or the package's canister) is evacuated).

The procedures should specify a suitable inert cover gas (such as helium) with a quality specification that ensures a known maximum percentage of impurities to minimize the source of potentially oxidizing impurity gases and vapors and adequately remove contaminants from the package (or package canister). The process should provide for repetition of the evacuation and repressurization cycles if the containment cavity of the transportation package is opened to an oxidizing atmosphere following the evacuation and repressurization cycles (as may occur in conjunction with seal repairs). Refer to NUREG-2215, Appendix 8C, "Fuel Oxidation and Cladding Splitting," for additional considerations on cladding oxidation and splitting.

Maximum (Peak) Zirconium Alloy Cladding Temperature

Ensure that the calculated maximum (peak) cladding temperature for the SNF during normal conditions of transport and short-term loading operations (i.e., loading, drying, backfilling with inert gas) does not exceed 570 °C [1,058 °F] for low-burnup fuel, or 400 °C [752 °F] for high-burnup fuel. These temperature limits were defined based on accelerated separate-effects testing to provide reasonable assurance that thermal creep and hydride reorientation will not compromise the integrity of the cladding. Furthermore, previous review guidance called on applicants to justify that the cladding hoop stresses of low-burnup fuel remained below 90 MPa for peak cladding temperatures between 400 and 570 °C [752 and 1,058 °F]. The cladding hoop stress limit of 90 MPa was meant to provide reasonable assurance that hydride reorientation would be limited in low-burnup fuel for the higher-peak cladding temperatures. However, research on hydride reorientation over the past 15 years has provided evidence that hydride reorientation is expected to be minimal in low-burnup fuel because of insufficient hydrogen content and cladding hoop stresses. Therefore, the application is not expected to contain a justification of a cladding hoop stress limit for low-burnup fuel up to peak cladding temperatures of 570 °C [1,058 °F].

If the application proposes the transport of high-burnup fuel that may have experienced a peak cladding temperature exceeding 400 °C [752 °F], ensure that the application provides additional justification that evaluates the consequences of the increased temperature on all credible mechanisms that may affect fuel performance, including aging mechanisms during prior dry storage (e.g., creep, hydride reorientation, delayed hydride cracking). For hypothetical accident conditions, the maximum cladding temperature for all burnups should not exceed 570 °C [1,058 °F].

Coordinate with the thermal reviewer to verify that the calculated maximum cladding temperature is based on the peak rod temperature, not the average rod temperature. By employing the peak rod temperature, the safety analyses are conservatively bounding to all fuel rods in the contents. Also confirm that the thermal models (and associated uncertainties) used for calculating cladding temperatures are acceptable to the thermal reviewer.

Thermal Cycling of Zirconium Alloy Clad Fuel during Drying Operations

Review the fuel-loading procedures to ensure that any repeated thermal cycling (repeated heatup and cooldown cycles) during loading operations of fuel is limited to fewer than 10 cycles, where cladding temperature variations during each cycle do not exceed 65 °C [117 °F]. The intent of the thermal cycling acceptance criteria is to limit precipitation of radial hydrides during loading operations. The reviewer should evaluate the technical bases provided in support of any thermal cycling inconsistent with this criterion on a case-by-case basis. Further, reflooding of the previously dried high-burnup fuel is not allowable unless the technical basis has adequately addressed the consequences of this operation on the performance of the cladding.

Note that the applicant may use mechanical properties of cladding accounting for reoriented hydrides in the structural evaluation of the SNF assembly. However, the database for these properties is very limited. For such applications, the loading procedures do not need to describe any thermal cycling limits if the applicant has adequately justified that the mechanical properties are reasonably bounding to reorientation expected for the design-basis heatup and cooldown cycles.

Cover Gas

Verify that the application defines the composition of the cover gas for the fuel during transport. Once the fuel rods are placed inside of the containment cavity (or canister cavity) of the transportation package and water is removed to a level that exposes any part of the rods to a gaseous atmosphere, the applicant must demonstrate that the SNF cladding will be protected against splitting from fuel pellet oxidation. If that atmosphere is oxidizing, then the fuel pellet may oxidize and expand, placing stress on the cladding. The expansion may eventually cause a gross rupture in the cladding, resulting in SNF that must be classified as damaged since it is not able to meet the requirements in 10 CFR 71.55(d)(2), 10 CFR 71.43(f), and 10 CFR 71.51(a). The configuration of the fuel must remain bounded by the reviewed safety analyses. Further, the release of fuel fines or grain-sized powder from ruptured fuel into the containment (or canister) cavity may be a condition outside the design basis for the package design. Three possible options exist to address the potential for and consequences of fuel oxidation:

1. Maintain the fuel rods in an inerted environment such as argon, nitrogen gas, or helium to prevent oxidation.

2. Ensure that there are not any cladding breaches (including hairline cracks and pinhole leaks) in the fuel pin sections that will be exposed to an oxidizing atmosphere. This can be done by a review of records (for example, shipping records) or 100 percent eddy current inspection of assemblies. Note that inspection of rods by either eddy current or visual inspection, to the extent needed to ensure there are no pinholes or hairline cracks, is difficult, time consuming, and subject to error.

3. Determine the time-at-temperature profile of the rods while they are exposed to an oxidizing atmosphere and calculate the expected oxidation to determine if a gross breach would occur. The analysis should indicate that the time required to incubate the splitting process will not be exceeded. Such an analysis would have to address expected differences in characteristics between the fuel to be loaded and the fuel tested in the referenced data. The design-basis maximum allowable cladding temperature should be limited to the temperature at which calculations show that cladding splitting is

not expected to occur. Such evaluations should address uncertainties in the referenced database.

If the applicant chose option 3, coordinate with the thermal reviewer to determine whether the operating procedures (see Chapter 8, "Operating Procedures Evaluation," of the SRP) include an adequate analysis of the potential for cladding splitting should fuel rods be exposed to an oxidizing gaseous atmosphere.

Fuel oxidation and cladding splitting conservatively follow Arrhenius time-at-temperature behavior. For fuel burnups not exceeding 45 gigawatt-days per metric tons of uranium and Zircaloy cladding, use the current time-at-temperature curves for uranium-based fuel (e.g., Einziger and Strain 1986) to determine the allowable exposure duration on an oxidizing atmosphere for a given design-basis fuel-cladding temperature. For example, using Figure 3-9 of Einziger and Strain (1986), at 360 °C [680 °F], one would expect to incur splitting at between 2 and 10 hours. On the other hand, if one expected the cladding temperature to stay at temperature for 100 hours, then the fuel temperature should be kept below 290 °C [554 °F]. Refer to Appendix 8D to NUREG-2215 for additional information on cladding oxidation and splitting.

Release Fractions (Nonleaktight Packages)

Coordinate with the containment reviewer to ensure that the applicant has provided adequate release fractions for the proposed fuel contents if the package containment is nonleaktight. Additionally, coordinate with the structural or containment reviewer on potential consequence assessment during hypothetical accident conditions using release fractions. The technical basis may include an adequate description of the supporting experimental data, including a description of the burnups of the test specimens, number of tests, and test-specimen pressure at the time of fracture. Verify that the collection method the applicant used for quantification of the release fractions is sophisticated enough to gather respirable release fractions.

Recognize that high-burnup fuel has different characteristics than low-burnup fuel with respect to CRUD thickness, cladding oxide thickness, hydride content, radionuclide inventory and distribution, heat load, fuel pellet grain size, fuel pellet fragmentation, fuel pellet expansion, and fission gas release to the rod plenum (see Appendix C.5, "High-Burnup Fuel," to NUREG/CR-7203, "A Quantitative Impact Assessment of Hypothetical Spent Fuel Reconfiguration in Spent Fuel Storage Casks and Transportation Packages," issued September 2015, for a description of high-burnup fuel). Differences in these characteristics affect the mechanisms by which the fuel can breach and the amount of fuel that can be released from failed fuel rods. Hence, the application may provide different release fractions (CRUD, fission gases, volatiles, and fuel fines) for low- and high-burnup fuel in nonleaktight containment.

Aluminum Alloy Clad Spent Fuel

Research reactor fuel assemblies typically use aluminum alloy cladding materials. Pitting corrosion of aluminum cladding during wet storage has been noted at the Savannah River Site (SRS). Several factors are believed to have played the most important role in the corrosion of aluminum-clad SNF in the reactor basins at SRS, including water conductivity and chemistry, cladding scratches and imperfections, and galvanic coupling of the cladding and stainless steel components (Howell 1999). Peacock et al. (1995) evaluated corrosion aluminum clad fuels in dry storage by using aluminum atmospheric corrosion data extrapolation to 50 years. The

corresponding thickness of metal consumed after 50 years for 1100, 5052, and 6061 aluminum alloys was determined to be 11, 19, and 12 microns [4.3×10^{-4}, 7.4×10^{-4}, and 4.7×10^{-4} inch] at 150 °C [302 °F] and 33, 76, and 30 microns [1.2×10^{-3}, 3.0×10^{-3}, and 1.2×10^{-3} inch], at 200 °C [392 °F], respectively. For a cladding with a thickness of 762 microns [0.030 inch], this represents a decrease in thickness from corrosion of less than 2.5 percent at 150 °C [302 °F] and less than 10 percent at 200 °C [392 °F]. Based on this evaluation, degradation of aluminum cladding in dry storage is expected to be minimal.

Vinson et al. (2010) developed a methodology to evaluate containment of aluminum-clad SNF, even with severe cladding breaches, for transport. The containment analysis methodology for aluminum-clad SNF, including severely breached fuel, was developed in accordance with the methodology provided in ANSI N14.5 and adopted in NUREG/CR-6487, "Containment Analysis for Type B Packages Used to Transport Various Contents," issued November 1996, to meet the requirements of 10 CFR Part 71. The analysis by Vinson et al. (2010) used a radionuclide inventory developed for the case of fuel from the RA-3 research reactor using conservative estimates of the fuel area exposed by cladding breaches based upon records from the visual examination of the fuel and the containment criterion for Type B packages. The containment analysis of the RA-3 fuel indicates that the SNF can be transported in a Type B package with a leak rate of 1.0×10^{-6} atm·cubic meters per second and maintained within the allowable release rates under normal conditions of transport and hypothetical accident conditions. Coordinate with the containment reviewer that an application's content and conditions are similar to those described in Vinson et al. (2010).

<u>Stainless Steel Clad Spent Fuel</u>

Types 304, 304L, and 348 stainless steels were originally used as nuclear fuel cladding and were replaced by zirconium alloys starting in the 1960s. The change from stainless steel to zirconium alloy cladding was driven by economic considerations and the performance of stainless steel materials in BWRs. EPRI reports NP-2119 and NP-2642 (EPRI 1981; 1982) describe the analyses of stainless steel cladding failures in reactor operations. Information on the physical properties and mechanical properties of irradiated stainless steel cladding materials and the operational history of reactors using stainless steel cladding are included in EPRI Report NP-2642 (EPRI 1982). Verify that the application includes an assessment of the material properties for any stainless steel clad SNF.

7.4.14.3 Canned spent fuel

SNF that has been classified as damaged for transportation should be placed in a can designed for damaged fuel or in an acceptable alternative. The purpose of a can designed for damaged fuel in transportation is to (i) confine gross fuel particles, debris, or damaged assemblies to a known volume within the transportation package; (ii) demonstrate that compliance with the criticality, shielding, thermal, and structural requirements are met; and (3) permit normal handling and retrieval from the transportation package. The can designed for damaged fuel may need to contain neutron-absorbing materials if results of the criticality safety analysis depend on the neutron absorber to meet the requirements of 10 CFR 71.31(a)(2) and 10 CFR 71.35, "Package Evaluation."

The configuration of the fuel inside the fuel can is generally not restricted; therefore, ensure that the applicant performed bounding safety analyses assuming full reconfiguration of the fuel inside the fuel can. Ensure that the assumed mechanical properties of the fuel can are adequate for the calculated temperatures in the reconfiguration analyses. The mechanical

properties of the fuel can should also be adequate for demonstrating adequate structural performance to ensure that the geometric form of the package contents will not be substantially altered during normal conditions of transport and hypothetical accident conditions. Consult with the containment reviewer when evaluating the damaged fuel can design.

7.4.15 Bolting Material

If threaded fasteners are employed as components of packaging important to safety, verify that the bolt material(s) have adequate resistance to corrosion and a coefficient of thermal expansion similar to the materials being bolted together. Confirm that the applicant has identified the materials used in bolted connections in accordance with 10 CFR 71.33(a)(5); demonstrated that the package meets the requirements of 10 CFR 71.35(a); and assessed the effects of corrosion, chemical reactions, and radiation effects on the bolting materials, in accordance with 10 CFR 71.43(d). Threaded inserts are commonly used to prevent galling of threaded fasteners. Bolts should have resistance to brittle fracture over the range of possible exposure conditions. Examine the use of bolts manufactured from precipitation-hardened stainless steels such as ASTM A564 Grade 630 (17-4 PH stainless steel) and verify that the thermal treatment specified provides adequate resistance to brittle fracture at low temperatures (Slunder et al. 1967). At temperatures above 316 °C [600 °F] some precipitation-hardened stainless steels can become embrittled (Clarke 1969). Verify that the application considers microstructural changes as a result of elevated temperature exposures in the evaluation of bolt performance. Verify that the applicant has evaluated and determined that the fasteners have adequate creep resistance under normal conditions of transport and hypothetical accident conditions temperature conditions in accordance with the testing requirements of 10 CFR 71.71 and 10 CFR 71.73.

Guidance on closure bolts for transportation packages is available in NUREG/CR-6007, “Stress Analysis of Closure Bolts for Shipping Casks,” issued April 1991. Coordinate with the structural reviewer to verify that all bolts have the required tensile strength, resistance to creep and brittle fracture, and a coefficient of thermal expansion that is similar to the materials being bolted together. Also verify that the bolting material and any internally threaded components have adequate resistance to general and localized corrosion and galvanic corrosion considering the range of operating conditions. Verify that the bolting materials are not sensitive to stress corrosion cracking under anticipated operating conditions, including loading and unloading.

7.4.16 Seals

Applicants for transportation package designs generally rely on data from seal manufacturers to define seal properties. Verify that the specified material properties are adequate for the application and consider the range of operating temperatures and environments for normal conditions of transport and hypothetical accident conditions. Confirm that the applicant has identified the materials used in seals in accordance with 10 CFR 71.33(a)(5); demonstrated that the package meets the requirements of 10 CFR 71.35(a); and assessed the effects of corrosion, chemical reactions, and radiation effects on the seal materials, in accordance with 10 CFR 71.43(d) and (f). Verify that inspection and maintenance for the package gasket or seal required by 10 CFR 71.87(c) considers the potential for radiation-induced degradation of the gasket or seal material and identifies appropriate replacement intervals.

7.4.16.1 Metallic seals

Metallic seals constructed of an inner spring and outer cover are frequently specified for high-temperature applications. Nickel-based alloys are often used for the spring material because of their excellent temperature and creep resistance. Verify that the metallic seal spring is constructed of a material that will not creep to an extent that may degrade its sealing performance. The seal-cover material may be soft aluminum or silver. If the application indicates that aluminum-faced seals are used, verify that the design includes provisions to prevent corrosion, as aluminum-faced seals have been observed to fail from corrosion in SNF storage systems (NRC 2013).

7.4.16.2 Elastomeric seals

Seals for industrial applications may be manufactured from a wide variety of elastomeric materials. Seals on transportation packages for radioactive materials have specific performance requirements and will likely be exposed to unique environments compared to other industrial applications. Consult with the containment reviewer to assess elastomeric seal properties for transportation packages.

For elastomeric O-rings and seals, verify that the application identifies required specifications (e.g., ASTM) for material and mechanical properties. For example, physical characteristics of butyl rubber containment O-ring seals and sealing washers may specify ASTM D2000, which includes specific ASTM tests to determine mechanical properties such as durometer tensile strength and elongation, heat resistance, compression set, cold temperature resistance, and cold temperature resiliency. Verify that O-ring seals will not reach their maximum operating temperature limit. Also verify that the application demonstrates that the minimum normal operating temperature {usually -40 °C [-40 °F]} will neither fail the O-ring seal by brittle fracture nor stiffen the O-ring (lose elasticity) to an extent that prevents the seal from meeting its service requirements. Commonly used elastomeric seal and O-ring materials include ethylene propylene, butyl rubber (isobutylene, isoprene rubber), and Viton™ (synthetic rubber and fluoropolymer elastomer).

Elastomeric seals may be susceptible to thermal- and radiation-induced aging (hardening). The effect of radiation on elastomeric and polymeric materials is discussed in Section 7.4.11 of this SRP chapter. Compare the radiation exposure from the operating environment to published information on the effect of radiation on elastomeric and polymeric materials (e.g., NASA 1970; Bruce and Davis 1981; Lee 1985; Battelle 1961). The seal manufacturer can generally provide guidance on radiation or thermal resistance. Verify that the applicant has included inspection of seals for damage and specified minimum seal replacement intervals as part of the operating procedures.

Verify that the applicant's selection of elastomeric seal materials considered the effects of permeability on leakage rate. Some seal materials, such as silicone and fluorosilicone elastomers, can have a much higher permeability compared to natural or synthetic rubbers or other elastomers. Review gas permeability data for common elastomeric seal materials that have been tabulated (Parker Hannifin Corporation 2007; Pickett and Lemcoe 1962) or that can be obtained from the seal manufacturer.

7.5 Evaluation Findings

Prepare evaluation findings upon satisfaction of the regulatory requirements in Section 7.3 of this SRP chapter. If the documentation submitted with the application fully supports positive findings for each of the regulatory requirements, the statements of findings should be similar to the following:

F7.1 The staff has reviewed the package and concludes that the applicant has met the requirements of 10 CFR 71.33. The applicant described the materials used in the transportation package in sufficient detail to support the staff's evaluation.

F7.2 The staff has reviewed the package and concludes that the applicant has met the requirements of 10 CFR 71.31(c). The applicant identified the applicable codes and standards for the design, fabrication, testing, and maintenance of the package and, in the absence of codes and standards, has adequately described controls for material qualification and fabrication.

F7.3 The staff has reviewed the package and concludes that the applicant has met the requirements of 10 CFR 71.43(f) and 10 CFR 71.51(a). The applicant demonstrated effective materials performance of packaging components under normal conditions of transport and hypothetical accident conditions.

F7.4 The staff has reviewed the package and concludes that the applicant has met the requirements of 10 CFR 71.85(a). The applicant has determined that there are no cracks, pinholes, uncontrolled voids, or other defects that could significantly reduce the effectiveness of the packaging.

F7.5 The staff has reviewed the package and concludes that the applicant has met the requirements of 10 CFR 71.43(d), 10 CFR 71.85(a), and 10 CFR 71.87(b) and (g). The applicant has demonstrated that there will be no significant corrosion, chemical reactions, or radiation effects that could impair the effectiveness of the packaging. In addition, the package will be inspected before each shipment to verify its condition.

F7.6 The staff has reviewed the package and concludes that the applicant has met the requirements of 10 CFR 71.43(f) and 10 CFR 71.51(a) for Type B packages and 10 CFR 71.55(d)(2) for fissile packages. The applicant has demonstrated that the package will be designed and constructed such that the analyzed geometric form of its contents will not be substantially altered and there will be no loss or dispersal of the contents under the tests for normal conditions of transport.

The reviewer should provide a summary statement similar to the following:

> Based on review of the statements and representations in the application, the NRC staff concludes that the materials used in the transportation package design have been adequately described and evaluated and that the package meets the requirements of 10 CFR Part 71.

7.6 References

10 CFR Part 50, “Domestic Licensing of Production and Utilization Facilities.”

10 CFR Part 71, “Packaging and Transportation of Radioactive Material.”

10 CFR Part 72, “Licensing Requirements for the Independent Storage of Spent Nuclear Fuel, High-Level Radioactive Waste, and Reactor-Related Greater Than Class C Waste.”

American Institute of Steel Construction, *Manual of Steel Construction, 9th Edition*, 1989.

American Society for Metals (ASM) International, “ASM Metals Handbook Desk Edition,” p 54, 2nd Edition, J. R. Davis Editor, Materials Park, OH: ASM International, 1998.

ASM International, “ASM Handbook - Volume 13 Corrosion,” Materials Park, OH: ASM International, 2000.

American Society of Mechanical Engineers (ASME) Boiler and Pressure (B&PV) Code, 2017.
- Section I, “Power Boilers.”
- Section II, “Materials.”
- Section III, “Rules for Construction of Nuclear Facility Components.”
  - Division 1, “Metallic Components”; Subsection NB through NH and Appendices
  - Division 3, “Containments for Transportation & Storage of Spent Nuclear Fuel and High Level Radioactive Material & Waste” (no NRC position on this has been established).
- Section V, “Nondestructive Examination.”
- Section VIII, “Rules for Construction of Pressure Vessels.”
- Section IX, “Welding, Brazing, and Fusing Qualifications.”
- Section XI, “Rules for Inservice Inspection of Nuclear Power Plant Components,”

American Society for Tests and Materials (ASTM) C1671-15, “Standard Practice for Qualification and Acceptance of Boron Based Metallic Neutron Absorber Materials for Nuclear Criticality Control for Dry Cask Storage Systems and Transportation Packaging,” ASTM International, 2015.

ASTM E290-14, “Standard Test Methods for Bend Testing of Material for Ductility,” 2014.

ASTM B557-06, Standard Test Methods for Tension Testing Wrought and Cast Aluminum- and Magnesium-Alloy Products,” West Conshohocken, PA: ASTM International, 2006.

ASTM B351-13, “Standard Specification for Hot-Rolled and Cold-Finished Zirconium and Zirconium Alloy Bars, Rod, and Wire for Nuclear Application,” West Conshohocken, PA: ASTM International, 2013.

ASTM A923-14, “Standard Test Methods for Detecting Detrimental Intermetallic Phase in Duplex Austenitic/Ferritic Stainless Steels”, West Conshohocken, PA: ASTM International, 2014.

ASTM C1671-15 “Standard Practice for Qualification and Acceptance of Boron Based Metallic Neutron Absorbers for Nuclear Criticality Control for Dry Cask Storage Systems and Transportation Packaging,” 2015.

ASTM E595-15, “Standard Test Method for Total Mass Loss and Collected Volatile Condensable Materials from Outgassing in a Vacuum Environment,” West Conshohocken, PA: ASTM International, 2015.

ASTM D2000-12,”Standard Classification System for Rubber Products in Automotive Applications,” West Conshohocken, PA: ASTM International, 2017.

American Welding Society (AWS) A2.4, “Standard Symbols for Welding, Brazing, and Nondestructive Examination,” 7th Edition, American Welding Society, 2012.

AWS D1.1, “Structural Welding Code-Steel,” 23rd Edition, American Welding Society, 2015.

AWS D1.6, “Structural Welding Code-Stainless Steel,” 3rd Edition American Welding Society, 2017.

Battelle Memorial Institute “The Effect of Nuclear Radiation on Elastomeric and Plastic Components and Materials,” REIC Report No. 21 Columbus, OH: Battelle Memorial Institute, September 1, 1961.

Billone, M.C., T.A. Burtseva, and R.E. Einziger, “Ductile-to-brittle transition temperature for high-burnup cladding alloys exposed to simulated drying-storage conditions,” *Journal of Nuclear Materials*, Vol. 433, pp. 431-448, 2013.

Billone, M.C., T.A. Burtseva, Z. Han, and Y.Y. Liu, “Effects of Multiple Drying Cycles on High-Burnup PWR Cladding Alloys,” DOE Used Fuel Disposition Report FCRD-UFD-2014-000052, ANL Report ANL-12/11, September 26, 2014.

Billone, M.C., T.A. Burtseva, and M.A. Martin-Rengel, “Effects of Lower Drying-Storage Temperatures on the DBTT of High-Burnup PWR Cladding Alloys,” DOE Used Fuel Disposition Report FCRD-UFD-2015-000008, ANL Report ANL-15/21, August 28, 2015.

Bruce, M.B. and M.V. Davis, “Radiation Effects on Organic Materials in Nuclear Plants,” EPRI NP-2129, Palo Alto, CA: EPRI, November 1981.

Campbell, Jr., W.A. and J.J. Scialdone,” Outgassing Data for Selecting Spacecraft Materials,” National Aeronautics and Space Administration (NASA) Reference Publication 1124 Revision 3, Greenbelt, MD: NASA Goddard Space Flight Center, September 1993.

Caskey, G.R., R.S. Ondrejcin, P. Aldred, R.B. Davis, and S.A. Wilson. “Effects of Irradiation on Intergranular Stress Corrosion Cracking of Type 304 Stainless Steel.” In *Proceedings of 45th NACE Annual Conference*, April 23–27, 1990, Las Vegas, Nevada. 1990.

Clarke, Jr., W.C., “A study of Embrittlement of a Precipitation Hardening Stainless Steel and some Related Materials,” Transaction of the Metallurgical Society of AIME, Vol. 245, pp. 2135-2140, October 1969.

Einziger, R.E. and R.V. Strain, “Oxidation of Spent Fuel at Between 250° and 360°C,” NP-4524, Palo Alto, CA: EPRI, April 1986.

Electric Power Research Institute (EPRI), “Investigation of Stainless Steel Clad Fuel Rod Failures and Fuel Performance in the Connecticut Yankee Reactor,” NP-2119, Palo Alto, CA: EPRI, November 1981.

EPRI, “An Evaluation of Stainless Steel Cladding for use in Current Design LWRs,” NP-2642, Palo Alto, CA: EPRI, December 1982.

Farrell, K., “Assessment of Aluminum Structural Materials for Service within the ANS Reflector Vessel,” ORNL/TM-13049, August 1995.

Farrell, K. and R.T. King. “Radiation-Induced Strengthening and Embrittlement in Aluminum.” Metallurgical Transactions A. Physical Metallurgy and Materials Science. Vol. 4, Issue 5, pp. 1,223–1,231, 1973.

Flom, Y., B.H. Parker, and H.P. Chu, “Fracture Toughness of SiC/Al Metal Matrix Composite,” NASA Technical Memorandum 100745, August 1989.

Flom, Y. and R.J. Arsenault, “Effect of Particle Size on Fracture Toughness of SiC/Al Composite Material,” Acta Metall. Vol. 37, No. 9, pp. 2413-2423, 1989.

Fontana, M.G. and N.D. Greene, *Corrosion Engineering*, McGraw Hill, 1978.

Fontana, M.G., *Corrosion Engineering*, New York, NY: McGraw Hill Book Company, 1986.

Gamble, R., “BWRVIP–100–A: BWR Vessel and Internals Project, Updated Assessment of the Fracture Toughness of Irradiated Stainless Steel for BWR Core Shrouds.” EPRI-1013396. Palo Alto, CA: Electric Power Research Institute, 2006.

Geelhood, K.J., C.E. Beyer, and W.G. Luscher, “PNNL Stress/Strain Correlation for Zircaloy,” Pacific Northwest National Laboratory, PNNL-17700, July 2008.

Graver, D.L., “Corrosion Data Survey – Metals Section,” 6th Edition, Houston, TX: National Association of Corrosion Engineers, 1985.

Howell, J.P., “Criteria for Corrosion Protection of Aluminum-Clad Spent Nuclear Fuel in Interim Wet Storage,” WSRC-MS-99-00601, Aiken, SC: Westinghouse Savannah River Company, 1999.

Kaufman, J.G., R.L. Moore, and P.E. Schilling, “Fracture Toughness of Structural Aluminum Alloys,” *Engineering and Fracture Mechanics,* Vol. 2. pp. 197–210, 1971.

Kim, J.-S., T.-H. Kim, D.-H. Kook, Y.-S. Kim, “Effects of Hydride Morphology on the Embrittlement of Zircaloy-4 Cladding,” *Journal of Nuclear Materials*, Vol 456, pp. 235–245, 2015.

Knoll, R.W., and E.R. Gilbert, “Evaluation of Cover Gas Impurities and Their Effects on the Dry Storage of LWR Spent Fuel,” PNL-6365, PNNL, November 1987.

Lee, G., “Radiation Resistance of Elastomers,” IEEE Transactions on Nuclear Science. Vol NS-32, No. 5, October 1985.

Lewandowski, J.J., “Fracture and Fatigue of Particulate MMCs, in Comprehensive Composite Materials,” Volume 3: *Metal Matrix Composites*, T.W. Clyne, Editor, Oxford UK: Pergamon. pp. 151-187, 2000.

Miserez, A.G.T., “Fracture and Toughening of High Volume Fraction Ceramic Particle Reinforced Metals,” PhD Thesis, École Polytechnique Fédérale de Lausanne, 2003.

National Aeronautics and Space Administration, “Nuclear and Space Radiation Effects on Materials,” NASA SP-8053, Springfield, Virginia: National Technical Information Service, June 1970.

Nikolaev, Yu., A.V. Nikolaeva, and Ya.I. Shtrombakh. “Radiation Embrittlement of Low-Alloy Steels.” *International Journal of Pressure Vessels and Piping*. Vol. 79. pp. 619–636, 2002.

NUREG/CR-6407, U.S. Nuclear Regulatory Commission, “Classification of Transportation Packaging and Dry Spent Fuel Storage System Components According to Importance to Safety,” INEL-95/0551. Idaho National Engineering Laboratory, February 1996.

Bulletin 96-04, “Chemical, Galvanic, or Other Reactions in Spent Fuel Storage and Transportation Casks,” U.S. Nuclear Regulatory Commission, July 1996, https://www.nrc.gov/reading-rm/doc-collections/gen-comm/bulletins/1996/bl96004.html.

Information Notice 2012-20, “Potential Chloride-Induced Stress Corrosion Cracking of Austenitic Stainless Steel and Maintenance of Dry Cask Storage System Canisters,” U.S. Nuclear Regulatory Commission, 2012, Agencywide Documents Access and Management System (ADAMS) Accession No. ML12319A440.

Information Notice 2013-07, “Premature Degradation of Spent Fuel Storage Cask Structures and Components from Environmental Moisture,” U.S. Nuclear Regulatory Commission, 2013, ADAMS Accession No. ML12320A697.

NUREG/CR-3019, U.S. Nuclear Regulatory Commission, “Recommended Welding Criteria for Use in the Fabrication of Shipping Containers for Radioactive Materials,” UCR-L53044, Lawrence Livermore National Laboratory, March 1985.

NUREG/CR-3854, U.S. Nuclear Regulatory Commission, “Fabrication Criteria for Shipping Containers,” UCRL-53544, Lawrence Livermore National Laboratory, March 1985.

NUREG/CR-5502, U.S. Nuclear Regulatory Commission, “Engineering Drawings for 10 CFR Part 71 Package Approvals,” UCRL-10-130438, Lawrence Livermore National Laboratory, May 1998.

NUREG/CR-6007, U.S. Nuclear Regulatory Commission, “Stress Analysis of Closure Bolts for Shipping Casks,” UCR-ID-110637, Lawrence Livermore National Laboratory, April 1992.

NUREG/CR-6322, U.S. Nuclear Regulatory Commission, “Buckling Analysis of Spent Fuel Basket,” UCR-LID-119697, Lawrence Livermore National Laboratory, May 1995.

NUREG/CR-6487, U.S. Nuclear Regulatory Commission, “Containment Analysis for Type B Packages Used to Transport Various Contents,” Lawrence Livermore National Laboratory, UCRL-ID-124822, November 1996.

NUREG/CR-1773, U.S Nuclear Regulatory Commission, “Fission Product Release from BWR Fuel Under LOCA Conditions,” ORNL/NUREG/TM-388, Oak Ridge National Laboratory, July 1981.

Regulatory Guide 7.9, “Standard Format and Content of Part 71 Applications for Approval of Packages for Radioactive Material,” U.S. Nuclear Regulatory Commission, March 2005.

NUREG/CR-7022, U.S. Nuclear Regulatory Commission, “FRAPCON-3.5: A Computer Code for the Calculation of Steady-State, Thermal-Mechanical Behavior of Oxide Fuel Rods for High Burnup,” Volume 1, Revision 1, October 2014, ADAMS Accession No. ML14295A539.

Regulatory Guide 7.10, “Establishing Quality Assurance Programs for Packaging Used in the Transport of Radioactive Material,” Revision 3, U.S. Nuclear Regulatory Commission, June 2015.

NUREG/CR-7203, U.S. Nuclear Regulatory Commission, “A Quantitative Impact Assessment of Hypothetical Spent Fuel Reconfiguration in Spent Fuel Storage Casks and Transportation Packages,” ADAMS Accession No. ML15266A413 September 2015.

NUREG-2214, U.S. Nuclear Regulatory Commission, “Managing Aging Processes in Storage (MAPS) Report,” July 2019, ADAMS Accession No. ML19214A111.

NUREG-2215, U.S. Nuclear Regulatory Commission, “Standard Review Plan for Spent Fuel Dry Storage Systems and Facilities,” November 2017, ADAMS Accession No. ML17310A693.

Regulatory Guide 1.193, “ASME Code Cases Not Approved for Use,” U.S. Nuclear Regulatory Commission, August 2014.

Regulatory Guide 1.84, “Design, Fabrication, and Materials Code Case Acceptability, ASME Section III,” U.S. Nuclear Regulatory Commission, August 2014.

Regulatory Guide 7.11, “Fracture Toughness Criteria of Base Material for Ferritic Steel Shipping Cask Containment Vessels with a Maximum Wall Thickness of 4 Inches (0.1 m),” U.S. Nuclear Regulatory Commission, June 1991.

Regulatory Guide 7.12, “Fracture Toughness Criteria of Base Material for Ferritic Steel Shipping Cask Containment Vessels with a Wall Thickness Greater than 4 Inch (0.1 m),” U.S. Nuclear Regulatory Commission, June 1991.

Odette, G.R. and G.E. Lucas. “Embrittlement of Nuclear Reactor Pressure Vessels.” *Journal of Metals*, Vol. 53, Issue 7, pp. 18-22, 2001.

Parker Hannifin Corporation, “Parker O-Ring Handbook,” ORD 5700, Lexington, KY: Parker Hannifin Corporation-O-Ring Division, 2007.

Peacock, Jr., H.B., R.L. Sindelar, P.S. Lam, and T.H. Murphy, “Evaluation of Corrosion of Aluminum-Base Reactor Fuel Cladding Materials During Dry Storage,” WSRC-TR-95-0345 (U) Aiken, SC: Westinghouse Savannah River Company, November 1995.

Pickett, A.G. and M.M Lemcoe, “Handbook of Design Data on Elastomeric Materials Used in Aerospace Systems,” Technical Report No. ASD-TR-61-234, Arlington, VA: Armed Services Technical Information Agency, January 1962.

Revie, R.W, *Uhlig’s Corrosion Handbook*, Second Edition New York, NY: John Wiley and Sons, 2000.

Revie, R.W. and H.H. Uhlig, *Corrosion and Corrosion Control*, Fourth Edition, Hoboken, NJ: John Wiley & Sons, Inc., 2008.

Rabiei, A., L. Vendra, and T. Kishi, “Fracture behavior of particle reinforced metal matrix composites,” *Composites*, Part A vol. 39 pp. 294–300, 2008.

Roberts, R., and C. Newton, “Interpretive Report on Small Scale Test Correlations with K_{IC} data,” Welding Research Council Bulletin 265, February 1981.

Slunder, C.J., A.F. Hoenie, and A.M. Hall, “Thermal and Mechanical Treatments for Precipitation-Hardenable Stainless Steels and their Effect on Mechanical Properties.” NASA Technical Memorandum (TM) X-53578 Huntsville AL: NASA George C. Marshall Space Flight Center, February 20, 1967.

Vinson, D.W., R.L. Sindelar, and N.C. Iyer, “Containment Analysis Methodology for Transport of Breached-Clad Aluminum Spent Fuel,” SRNL-STI-2010-00368, Aiken, SC: Savannah River National Laboratory, 2010.

Was, G.S., J. Busby, and P.L. Andresen, “Effect of Irradiation on Stress-Corrosion Cracking and Corrosion in Light Water Reactors,” *Metalworking: Bulk Forming,* Vol. 13C, *ASM Handbook*, ASM International, pp. 386–414 2006.

ATTACHMENT 7A CLARIFICATIONS, GUIDANCE, AND EXCEPTIONS TO ASTM STANDARD PRACTICE C1671-15

The U.S. Nuclear Regulatory Commission (NRC) has determined that American Standard for Testing and Materials (ASTM) Standard Practice C1671-15 (ASTM C1671-15), "Standard Practice for Qualification and Acceptance of Boron Based Metallic Neutron Absorbers for Nuclear Criticality Control for Dry Cask Storage Systems and Transportation Packaging," with some exceptions, additions, and clarifications, is appropriate for use in review activities. This appendix provides guidance to the staff that supplements guidance provided in Chapters 7, "Materials Evaluation," and 9, "Acceptance Tests and Maintenance Program Evaluation," of this standard review plan. Alternative approaches are acceptable if technically supportable.

7A.1 Specific Clarifications, Exceptions, and Guidance

7A.1.1 Use of ASTM C1671-15

The NRC staff considers the terminology and statements within ASTM C1671-15 acceptable guidance with some additions, clarifications, and exceptions delineated below, for reviewing SNF storage casks and transportation packages. ASTM C1671-15 is limited to boron-based metallic neutron absorbers. When used, the applicant is responsible for providing a justification that ASTM C1671-15 is applicable to specific boron-based metallic neutron absorbers in an application.

7A.1.2 Clarification Regarding Use of Section 5.2.1.3 of ASTM C1671-15

If the supplier has shown that process changes do not cause changes in the density, open porosity, composition, surface finish, or cladding (if applicable) of the neutron-absorber material, the supplier should not need to requalify the material with regard to thermal properties or resistance to degradation by corrosion and elevated temperatures.

7A.1.3 Additional Guidance Regarding Use of Section 5.2.5.3 of ASTM C1671-15

Neutron-absorbing materials should undergo testing to simulate submersion and subsequent cask and package drying conditions, as part of a qualifying test program. Clad aluminum and boron carbide (B_4C) neutron-absorbers with open porosities between 1 and 3 percent have exhibited blistering after drying. This blistering was from flash steaming of water that was trapped in pores. The staff is concerned that such blistering could have an adverse impact on fuel retrievability and the ability of the absorber to perform its criticality safety function.

Unclad aluminum and B_4C neutron-absorbing materials with open porosities less than 0.5 volume percent may not be required to undergo simulated submersion and drying tests.

7A.1.4 Clarification Regarding Use of Section 5.2.6.2 of ASTM C1671-15

If a coupon contiguous to every plate of neutron-absorbing material is not examined during acceptance testing, the applicant should conduct the neutron attenuation program with a sufficient number of samples to ensure that the neutron-absorbing properties of the materials meet the minimum required areal density of the neutron absorber. In the past, the staff has accepted the following:

- for neutron-absorbing material with a significant qualification program and nonstatistically derived minimum guaranteed properties, wet chemistry analysis of mixed powder batches followed by additional neutron attenuation testing of a minimum of 10 percent of the neutron poison plates

- sampling plans where at least one neutron transmission measurement is taken for every 2,000 square inches [1.3 square meters] of neutron poison plate material in each lot

- a sampling plan that requires each of the first 50 sheets of neutron-absorber material from a lot, or a coupon taken there from, be tested (by neutron attenuation). Thereafter, coupons shall be taken from 10 randomly selected sheets from each set of 50 sheets. This 1-in-5 sampling plan shall continue until there is a change in lot or batch of constituent materials of the sheet (i.e., B_4C powder or aluminum powder) or change in the process. A measured value less than the required minimum areal density of boron-10 during the reduced inspection is defined as nonconforming, along with other contiguous sheets, and mandates a return to 100 percent inspection for the next 50 sheets.

7A.1.5 Additional Guidance Regarding Use of Sections 5.2.6.2 and 5.3.4.1 of ASTM C1671-15

The applicant should clearly state the minimum areal density of boron-10 present in each type of neutron-absorbing material used in the calculation of the effective neutron multiplication factor, k_{eff}, in the Acceptance Tests and Maintenance Program section of the application.

It has been the staff's practice to limit the credit for neutron-absorber materials to only 75 percent of the minimum amount of boron-10 confirmed by acceptance tests. The staff has accepted up to 90-percent credit in certain cases where the absorber materials are shown by neutron attenuation testing of production lots to be effectively homogeneous.

If 90-percent credit is taken for the efficacy of the neutron absorber, methods other than neutron attenuation should be used only as verification or partial substitution for attenuation tests. The applicant should conduct benchmarking of other methods against neutron attenuation testing periodically throughout acceptance testing, under appropriate attenuation conditions and with proper sample sizes. This should be done to confirm the adequacy of the proposed methods, as the staff considers direct measurement of neutron attenuation to be the most reliable method of measuring the expected neutron-absorbing behavior of the poison plates.

Direct neutron attenuation measurements are only expected for the qualification of alternative characterization methods (e.g., wet chemistry analyses) when only 75-percent credit is taken for the boron-10 areal density of the neutron-absorbing material. Once qualified and benchmarked, neutron attenuation is no longer expected for acceptance testing, as the alternative method is considered properly validated by neutron attenuation.

Applicants should be encouraged to provide statistically significant data showing the correspondence between neutron attenuation testing and wet chemistry data and the precision of both methods. Such data may permit the partial substitution of neutron attenuation measurements with chemical methods for materials receiving 90-percent credit.

7A.1.6 Additional Guidance Regarding Use of Section 5.2.6.2(2) of ASTM C1671-15

The size of the collimated neutron beam should be specified for attenuation testing, and limited to 2.54 centimeters (cm) [1 inch] in diameter, with a tolerance of 10 percent. In the past, the NRC staff has had concerns that attenuation measurements conducted with neutron beams greater than 1-cm [0.4-inch] diameter may lack the resolution to detect localized regions of the neutron-absorbing material that have a low concentration of boron-10. The staff conducted an independent criticality study using an SNF transportation package to determine if neutron attenuation measurements using beam sizes in excess of 1 cm [0.4-inch] were unable to detect localized regions in the neutron-absorbing material deficient in neutron absorber. In the study, the staff assumed that the neutron absorber boron-10 arranged itself into a "checkerboard" fashion of alternating boron-rich and boron-deficient regions, where the boron concentration was 50 percent greater and 50 percent less than the average amount of boron in a homogenous plate of boron and aluminum. The staff considers this hypothetical configuration bounding of any possible "real-life" defects that might occur in actual manufacturing. In the simulations, the staff considered two models. One model permitted a nonconstant density, where boron was removed from boron-deficient regions and directly added to adjacent regions. In the second model, the quantity of aluminum and carbon were adjusted in each of the regions so that the overall mass density of the plate remained uniform. The sizes of the boron-rich and boron-deficient regions were then gradually increased, and changes in k_{eff} were observed. This is plotted in Figure 7A-1.

The results of the study showed no significant difference in k_{eff} when the size of the heterogeneities (the length of each boron-deficit or -rich region) increased from 1 cm to 2.54 cm. It should be noted that the staff conducted this study on a single transportation package design. The staff considers the heterogeneities introduced in the neutron-absorbing materials sufficiently exaggerated such that this study may be used to make a general determination.

As such, the staff regards collimated neutron beams with nominal diameters between 1 cm and 2.54 cm, with tolerances of 10 percent, as sufficiently capable of detecting defects within the neutron-absorbing material, and should be considered acceptable for the purposes of qualification and acceptance testing of neutron-absorbing materials.

7A.1.7 Additional Guidance Regarding Use of Section 5.2.6.3 of ASTM C1671-15

The maximum permissible thickness deviation of the neutron-absorbing material should be specified, and actions should be taken if the thickness is outside the permissible limits.

During the production of neutron-absorbing materials, minor deviations from the specified physical dimensions are expected. The applicant should discuss these deviations, and, in particular, variations of the neutron-absorbing material thickness in the application in a way that can be referenced in the certificate of compliance. The applicant should specify the maximum permissible thickness deviation (for both over and under tolerances) and the actions taken if the thickness is outside the permissible limits. This is done to assure adequate performance of the neutron-absorbing materials. In the past, the staff has allowed acceptance testing where a minimum plate thickness is specified, which permitted local depressions as long as the depressions were no more than 0.5 percent of the area on any given plate, and the thickness at their location was not less than 90 percent of the minimum design thickness.

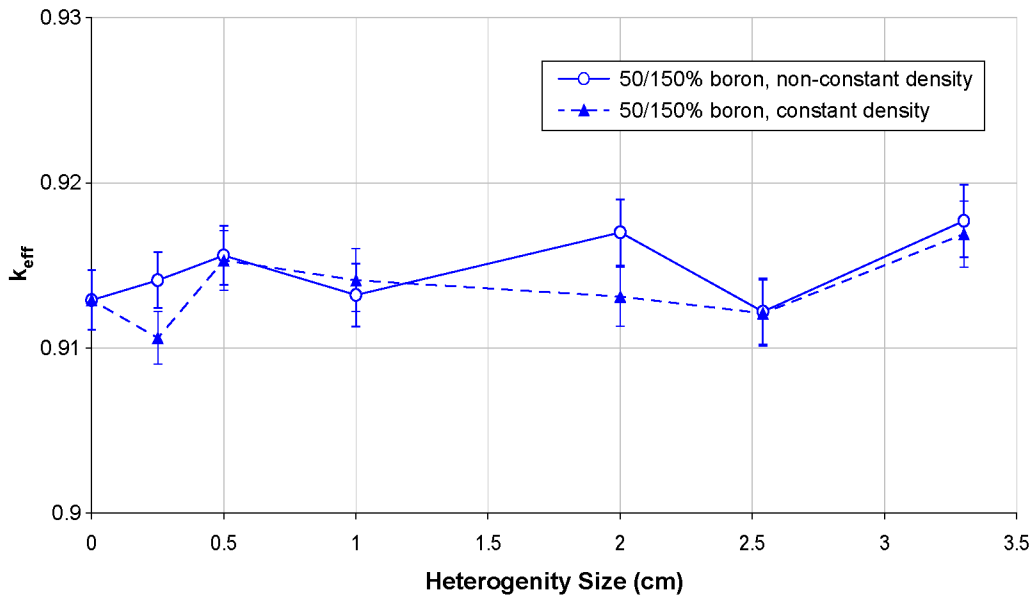

Figure 7A-1 Plot of the effective neutron multiplication factor, k_{eff}, as a function of heterogeneity size

7A.1.8 Additional Guidance Regarding Use of Section 5.2.6.4 of ASTM C1671-15

The applicant's acceptance test should specify a visual inspection procedure that describes the nominal inspection criteria. Visual inspection should be conducted on all neutron-absorbing materials intended for service.

As part of the visual inspection of the neutron-absorbing material, it is important to ensure that there are no defects that might lead to problems in service such as delaminations or cracks that could appear on clad neutron-absorbing materials. The concern is that gross defects on the plate or plate edge may lead to separations, especially from vibrations during transportation; this could lead to a lack of absorber capability over the missing or misplaced region within a plate material.

7A.1.9 Clarification Regarding Use of Sections 5.2.7 and 5.3 of ASTM C1671-15

The applicant should include a description of the key processes, major operations process controls, and the acceptance testing steps of neutron-absorbing materials in the Acceptance Tests and Maintenance Program section of the application.

7A.1.10 Additional Guidance Regarding Use of Section 5.2.7.1 of ASTM C1671-15

In addition to the guidance provided in Section 5.2.7.1 of ASTM 1671-15, another key process to consider is a change of the matrix alloy, or a change in the material's heat treatment, which may cause an undesirable reaction to occur within the matrix itself or between the matrix and a secondary phase.

7A.1.11 Additional Guidance Regarding Use of Section 5.4 of ASTM C1671-15

Neutron-absorbing materials intended for criticality control should have a safety classification of "A," in accordance with NUREG/CR-6407.

7A.2 References

American Society for Tests and Materials, C1671-15, "Standard Practice for Qualification and Acceptance of Boron Based Metallic Neutron Absorber Materials for Nuclear Criticality Control for Dry Cask Storage Systems and Transportation Packaging," ASTM International, 2015.

NUREG/CR-6407, U.S. Nuclear Regulatory Commission, "Classification of Transportation Packaging and Dry Spent Fuel Storage System Components According to Importance to Safety," Idaho National Engineering Laboratory, INEL-95/0551, February 1996.

ATTACHMENT 7B FUEL SELECTION

In accordance with 10 CFR 71.33(b)(3), an application for a transportation package must include a description of the chemical and physical forms of the spent nuclear fuel (SNF) contents. Further, as required by 10 CFR 71.55(d)(2) and 10 CFR 71.87(a), the geometric form of the package contents must not be substantially altered during normal conditions of transport and the package is to be proper for the contents to be shipped, respectively. Therefore, for undamaged and intact assemblies, the fuel cladding serves a design function in transportation packages for ensuring that the SNF configuration remains within the bounds of the safety analyses in the application. This assurance is used when developing instructions for safely opening the transportation package (as stated in 10 CFR 71.89, "Operating Instructions"), as any potential fuel reconfiguration during transport should be accounted for in these procedures. If the fuel is classified as damaged, a separate canister (e.g., a can for damaged fuel) that confines the assembly contents to a known volume may be used to ensure the safety analyses in the application remain bounding.

The certificate of compliance (CoC) of the transportation package generally defines the allowable cladding condition for the SNF contents, and the nomenclature has historically varied from design to design. For example, the terms "intact" and "undamaged" have both been used to describe cladding without any known gross cladding breaches. New applications should adhere to the nomenclature of this standard review plan whenever practicable. Users of transportation packages are required to comply with the CoC by selecting and loading the appropriate fuel and must maintain records that reasonably demonstrate that loaded fuel was adequately selected in accordance with their approved procedures and quality assurance (QA) program.

Users may consider several methods, either singularly or in combination, to demonstrate that the fuel cladding does not contain gross breaches.

7B.1 Reactor Operating Records

The staff considers that adequate reactor operating records that identify only gaseous or volatile decay products (no heavy metals) in the reactor coolant system are acceptable evidence that cladding breaches are no larger than a pinhole leak or hairline crack. If heavy-metal isotopes were detected in the coolant system during reactor operation, additional fuel qualification testing is generally needed to identify grossly breached assemblies in the core.

Users should assess whether any missing records from early reactor operation, such as those lost from changes in plant ownership, may impact conclusions made about fuel discharged from a given cycle. The users should determine whether additional fuel qualification is necessary to provide reasonable assurance that the fuel to be loaded in the transportation package was properly classified.

7B.2 Visual Inspection

Visual examination of selected fuel has a two-fold purpose: (i) to identify any mechanical damage to the assembly that may preclude its ability of being retrieved, and (ii) to assess the extent and size of any cladding failures. The extent of visual inspection is generally limited in assessing flaws behind the spacer grids (e.g., pellet-clad interaction flaws, debris fret) and in rods in the inner matrix. Therefore, most users utilize a tape-recorded visual inspection of the exterior of the fuel assembly only as a supplement to other fuel qualification test data

[e.g., sipping, ultrasonic testing (UT)]. In addition, accessibility in boiling-water reactor (BWR) assemblies may also be limited by the flow channel. Because of these limitations, unless a user can reasonably demonstrate sufficient resolution and inspection coverage, visual inspection may not provide, on its own, reasonable assurance that the fuel cladding does not contain gross cladding breaches.

7B.3 Fuel Qualification Testing

7B.3.1 Sipping

Sipping techniques are widely used to identify failed fuel assemblies by detecting radioactive fission gases (e.g., krypton-85, xenon-133) released through cladding breaches. The techniques are not considered adequate for breach sizing; therefore, users generally conservatively classify fuel with detected fission gases as damaged.

Mast sipping is generally performed during refueling operations, as the first lift from the core generally yields the highest release of fission gases (from the decreasing water head pressure). Three primary techniques are used for sipping, depending on the reactor type: (i) in-mast sipping for pressurized-water reactors (PWRs), (ii) telescope sipping (for PWRs or BWRs), and (iii) mast sipping (for PWRs). The operations vary. For example, in-mast sipping generally employs air injection at the bottom of the mast to help entrain released fission gases; telescope sipping generally includes processing a gas sample from a liquid extraction; and mast-sipping allows for sampling at different locations. The staff considers mast sipping records to be adequate for fuel selection if testing is performed at the time of discharge under conditions not known to result in nonconservative measurements. For example, inner core assemblies from cycles with significant grid-to-rod fretting may increase the background counts and mask small-release leakers, particularly for sipping methods that do not use gas entrainment. Therefore, when determining whether the fuel is intact or undamaged, the user should review mast sipping data considering the limitations of the respective technique.

The staff does not expect any operable degradation mechanisms to result in gross cladding breaches during wet storage. Therefore, telescope sipping has historically been used for fuel qualification of wet stored fuel (e.g. during spent fuel pool transfers). However, the use of telescope sipping for SNF that has been in wet storage for a significant period should consider the sensitivity of the technique relative to the fuel's decreasing fission gas inventory.

International Atomic Energy Agency Nuclear Energy Series No. NF-T-3.6, "Management of Damaged Spent Nuclear Fuel," issued June 2009, recommends that xenon-133 measurements be taken up to 2 months after discharge and krypton-85 measurements be taken up to 10 years after discharge.

The industry generally regards vacuum can sipping as one of the most sensitive fuel qualification techniques currently available, particularly for low-power and low-fission-yield assemblies. This technique involves individually placing each assembly inside an isolation chamber (sealed can) and drawing a negative pressure to drive noble fission gas releases (if the cladding is breached), which are collected at the top of the can. The staff considers this technique acceptable for all fuel.

7B.3.2 Ultrasonic Testing

In-bundle UT is generally performed by placing multiple UT wands at a preestablished axial elevation on the probed assembly. PWR assemblies do not require dismantling for accessibility;

however, BWR assemblies generally require de-channeling. UT relies on the measurement of the reflected amplitude of a shear wave signal as it transverses the cladding tube. Water ingress to the rod leads to UT signal attenuation (amplitude reduction) and identification of a cladding breach.

Users historically have relied on UT data for fuel classification and selection. However, users should consider potential technique limitations during their review of UT data. More specifically, the user's review should consider (i) whether the lack of water inside the fuel rod at the elevation of the UT inspection can reasonably ensure no water ingress at other axial elevations (particularly for high-burnup fuel, where the interspace between the cladding and the fuel pellet may be closed); (ii) the effects of pellet-to-clad interactions, which may produce multiple echo signals that are difficult to assess; and (iii) any potential misalignment of the transducers from the presence of CRUD or oxide flaking, or any fuel rod bowing or geometry changes from irradiation (e.g., bowing caused by larger-diameter guide tubes). These limitations may result in a user not adequately classifying an assembly, potentially resulting in fission gas releases during drying operations.

In the past, 10 CFR Part 72 licensees have revised operating procedures to limit or avoid the use of UT inspections for fuel classification. For example, a secondary review of UT data from assemblies loaded during a late 2004 campaign at Arkansas Nuclear One resulted in the conservative reclassification of five assemblies loaded in four MPCs as damaged fuel (NRC 2005). The licensee concluded that UT data could not reasonably be used to size the identified failures. Therefore, the licensee submitted an exemption request from the requirements of 10 CFR 72.212(a)(2) and 10 CFR 72.214, which included revised safety analyses assuming up to two damaged fuel pins, each in a separate fuel assembly. In a separate event in 2014, Arkansas Nuclear One conservatively reclassified an assembly as damaged following a noble fission gas release (krypton-85) during forced helium dehydration of a loaded multipurpose cask (NRC 2016; Entergy 2014). The licensee cited the prevalence of grid-to-rod fretting in the operating cycles for the subject assemblies and the lower reliability of UT relative to other fuel qualification test methods as the most likely cause of the event. As a corrective action, the licensee revised operating procedures to avoid the use of UT for future fuel classification. The licensee for the Calvert Cliffs Nuclear Power Plant has also chosen to rely on vacuum can sipping for fuel classification activities in the interest of potentially identifying any legacy fuel that may be vulnerable to releases.

7B.4 Noble Gas Releases During Loading Operations of Transportation Packages

Noble fission gas releases may occur during SNF loading operations of transportation packages. The staff expects users to document the occurrence of these releases and take actions consistent with their approved procedures and QA program. These actions may include a review of fuel-selection records, the performance of a root-cause or apparent-cause analysis, and a review of industrywide operating experience pertaining to these releases to determine additional followup actions. Users should ensure the contents loaded into the transportation package meet the applicable CoC conditions pertaining to the fuel condition.

If drying activities are suspended after a release, acceptable practice would be to place the transportation package in a safe condition. Examples of followup actions the staff finds acceptable include ensuring that the fuel design-basis temperature limit is not exceeded, and preventing any inadvertent ingress of oxidizing species to the containment (or canister) cavity that may compromise cladding integrity. The staff has reasonable assurance that the fuel is

unlikely to degrade if the fuel atmosphere is inert and the temperature is controlled. Therefore, backfilling with helium consistent with the CoC is expected to prevent degradation of the fuel until drying operations resume.

The staff recognizes that no fuel qualification test method is 100 percent accurate, and quantifying the reliability is difficult because of the low failure rate of modern fuel (about 0.001 percent). Nevertheless, a user's evaluation of operating experience may identify limitations of a given technique, and the staff recommends that the user take appropriate actions consistent with the approved site procedures and QA program. Such actions may include revising operating procedures to limit the use of certain techniques, depending on the type of fuel or sensitivity limits of the instrumentation, as well as assessing the need for secondary characterization.

The staff considers that the release of noble fission gases during SNF loading operations is possible through existing pinholes or hairline cracks in undamaged cladding. Therefore, if the fuel being loaded was adequately classified and protected against inadvertent degradation, the staff considers that the release of noble fission gases during loading operations is not indicative of the presence or development of a cladding gross breach.

7B.5 References

10 CFR Part 71, "Packaging and Transportation of Radioactive Material."

10 CFR Part 72, "Licensing Requirements for the Independent Storage of Spent Nuclear Fuel, High-Level Radioactive Waste, and Reactor-Related Greater Than Class C Waste."

Entergy Operations Inc., 2014, "Special Report—Dry Fuel Cask MPC-24-060, Arkansas Nuclear One–Units 1 and 2 Docket Nos. 50-313 and 50-368, and 72-13, License Nos. DPR-51 and NPF-6," letter and attachment from Stephanie L. Pyle, Entergy Operations, Inc., to "Document Control Desk," U.S. Nuclear Regulatory Commission, October 13, 2014, Agencywide Documents Access and Management System (ADAMS) Accession No. ML14286A037.

International Atomic Energy Agency, "Management of Damaged Spent Nuclear Fuel," Nuclear Energy Series No. NF-T-3.6, June 2009, https://www-pub.iaea.org/MTCD/Publications/PDF/Pub1395_web.pdf.

U.S. Nuclear Regulatory Commission, 2005, "Exemption from 10 CFR 72.212 and 72.214 for Dry Spent Fuel Storage Activities–Arkansas Nuclear One (TAC NO. L23826)," letter and attachment from William Ruland, NRC Office of Nuclear Material Safety and Safeguards, to Dale E. James, Acting Director, Arkansas Nuclear One, Entergy Operations, Inc., April 8, 2015, ADAMS Accession No. ML052510724.

NRC, 2016, "Arkansas Nuclear One, Units 1, 2, and Independent Spent Fuel Storage Installation (ISFSI)–NRC Inspection Report 05000313/2015011, 05000368/2015011, and 07200013/2015001," letter and attachment from Ray L. Keller, P.E., Chief, Division of Nuclear Materials Safety, to Jeremy Browning, Site Vice President, Arkansas Nuclear One, Entergy Operations, Inc., January 21, 2016, ADAMS Accession No. ML16021A485.

8 OPERATING PROCEDURES EVALUATION

8.1 Review Objective

The objective of this U.S. Nuclear Regulatory Commission (NRC) operating procedures evaluation is to verify that the operating controls and procedures for the package (packaging together with contents) meet the requirements in Title 10 of the *Code of Federal Regulations* (10 CFR) Part 71, "Packaging and Transportation of Radioactive Material" and that the package will be operated in a manner consistent with its design and evaluation for approval.

8.2 Areas of Review

The NRC staff should review the application to verify that it adequately describes the package and includes adequately detailed drawings. In general, the staff should review the following information to determine the adequacy of the package description:

- package loading
  - preparation for loading
  - loading of contents
  - preparation for transport
- package unloading
  - receipt of package from carrier
  - preparation for unloading
  - removal of contents
- preparation of empty package for transport
- other procedures

8.3 Regulatory Requirements and Acceptance Criteria

This section summarizes those sections of 10 CFR Part 71 relevant to the review areas addressed in this standard review plan (SRP) chapter. Table 8-1 shows the relationship between the relevant regulatory requirements and the areas of review materials. The NRC staff reviewer should refer to the exact language in the regulations.

The application should specify that the package is operated in accordance with written procedures that are presented sequentially in the order of performance, as noted in the following sections.

8.3.1 Package Loading

The application must identify established codes and standards applicable to the use of the package [10 CFR 71.31(c)]. Leakage testing of the package should specify the package leak rate limits and meet the assembly verification leakage test requirements specified in American National Standards Institute (ANSI) N14.5, "Radioactive Materials—Leakage Tests on Packages for Shipment."

Table 8-1 Relationship of Regulations and Areas of Review for Transportation Packages						
Area of Review	**10 CFR Part 71 Regulations**					
	71.31(c)	**71.35(c)**	**71.43(g)**	**71.47(b)(c)(d)**	**71.87**	**71.89**
Package loading	●	●	●	●	●	●
Packaging unloading		●				●
Preparation of empty package for transport					●	
Other procedures	●	●				

8.3.2 Package Unloading

The application should include inspections, tests, and special preparations for package unloading. The application should describe the procedures for opening the package and removing the contents. As applicable, the operating procedures in the application should also describe the operations used to ensure safe removal of fission or other radioactive gases, contaminated coolant, and solid contaminants. The application should also address the conduct of radiation and contamination surveys, inspection of the tamper-indicating device, and any proposed special controls and precautions needed for handling and unloading. Operating procedures must address measures to comply with the radiation-protection requirements in 10 CFR 20.1906, "Procedures for Receiving and Opening Packages." [10 CFR 71.35(c) and 10 CFR 71.89, "Opening Instructions"]

8.3.3 Preparation of Empty Package for Transport

The application should address inspections and tests to be performed for determining the level of nonfixed (removable) contamination on external surfaces of the package. [10 CFR 71.87, "Routine Determinations"] The interior of the packaging should be properly decontaminated, closed, and prepared for transport in accordance with the requirements of 49 CFR 173.428, "Empty Class 7 (Radioactive) Materials Packaging."

8.3.4 Other Procedures

The application must include any proposed special controls and precautions for the transport, loading, unloading, and handling of a transportation package and any proposed special controls in the case of accident or delay [10 CFR 71.35(c)]. Special controls and precautions can address such aspects as the route, weather, escorting shipments, and shipping time restrictions. The package should be properly closed and delivered to the carrier in such a condition that subsequent transport will not reduce the effectiveness of the packaging.

8.4 Review Procedures

The package operation and shipment preparations must be performed in accordance with detailed written procedures [10 CFR 71.87(f)]. The applicant should submit a high-level description of the essential elements needed to prepare the package for shipment to assure safe performance of the package under normal conditions of transport and hypothetical accident conditions. The application should present these steps in sequential order, as applicable. Sequencing of operational steps should be flexible when performance of the activities in a different order would not affect package preparation, and the application should identify that

flexibility. The Operating Procedures section of the application is typically included by reference in the certificate of compliance as conditions of the package approval.

Verify that the operating controls and procedures meet the requirements of 10 CFR Part 71 and that these procedures are adequate to ensure that package users will operate the package in a manner consistent with its design and evaluation for approval. Appendix A to this SRP provides additional guidance regarding operating controls and procedures for several package types. Verify that the application includes a clear description of the essential elements needed to prepare the package for shipment and addresses the steps specified in 10 CFR 71.87. Verify that the package operation described in the application focuses only on those steps needed to ensure the package performance; excessive detail and specificity, with respect to package operations, are not needed. Instead, the application should allow flexibility with respect to steps that are not specifically related to package preparation. For example, the detailed written procedures may specify which lifting rigging to use to handle the package, whereas the operating procedures in the application would only address this in a generic way since the rigging may change at different facilities.

Refer to NUREG/CR-4775, "Guide for Preparing Operating Procedures for Shipping Packages," issued December 1988, when reviewing the application. This document describes what information should be presented in the application and what information should appear in the package user's more-detailed operating procedures.

The operating procedures evaluation is based in part on the descriptions and evaluations presented in the General Information, Structural Evaluation, Thermal Evaluation, Containment, Shielding Evaluation, Criticality Evaluation, and Materials Evaluation sections of the application. Results of the operating procedures review are considered in the Acceptance Tests and Maintenance Program review. An example of the information flow for the review of the operating procedures is shown in Figure 8-1.

The application appendix should include a list of references, copies of applicable references if not generally available to the reviewer, test results, and other appropriate supplemental information.

8.4.1 Package Loading

8.4.1.1 Preparation for loading

Verify that the application describes the procedures for package loading preparations sequentially in the order of performance, and ensure that the procedure descriptions, at a minimum, assure the following:

- The package is loaded and closed in accordance with written procedures.
- The contents are authorized in the certificate of compliance, including the use of a secondary container or containment, shoring, or dunnage, as applicable.
- The use of the package complies with the conditions of approval in the certificate of compliance, including verification that required maintenance has been performed.
- Any required moderator or neutron absorber is present and in proper condition.

- The package is in unimpaired physical condition.

- Any special controls and precautions for handling are identified and provided.

8.4.1.2 Loading of contents

Verify that the application describes the procedures for loading the package contents sequentially in the order of performance, and ensure that the procedure descriptions include, at a minimum, the following measures:

- identifies and describes the method(s) of loading the contents

- identifies and provides any special handling equipment, controls, or precautions

- describes the methods to drain and dry the package (e.g., vacuum drying), the effectiveness of the proposed methods, and the appropriate drying or dryness criteria if the package is loaded under water

- verifies that the package has been loaded properly; for commercial spent nuclear fuel (SNF) packages, consider Information Notice 2014-09, "Spent Fuel Storage or Transportation System Misloading," as part of the review related to this measure. Also, coordinate with the criticality reviewer to ensure that the package operations include any additional procedures that are necessary for commercial SNF packages that rely on burnup credit

8.4.1.3 Preparation for transport

Verify that the application describes the procedures for preparing the package for transport sequentially in the order of performance, and ensure that the procedure descriptions include, at a minimum, the following measures:

- Each closure device of the package, including seals and gaskets, is properly installed, secured, and free of defects.

- The package is closed appropriately in accordance with specified bolt torques as delineated in the drawings and bolt-tightening sequences. Ensure that the application includes the operational guidance, such as specified torqueing sequences, lubrication, and torque values, provided in Section 8 of NUREG/CR-6007, "Stress Analysis of Closure Bolts for Shipping Casks," issued April 1992.

- Nonfixed (removable) radioactive contamination on external surfaces is as low as reasonably achievable and within the limits specified in 49 CFR 173.443, "Contamination Control."

- The radiation survey requirements are described to confirm that the allowable external radiation levels are as expected and the limits specified in 10 CFR 71.47, "External Radiation Standards for All Packages," are not exceeded. If measured radiation levels exceed expected values, ensure that the package is properly loaded and investigate other possible sources of the discrepancy.

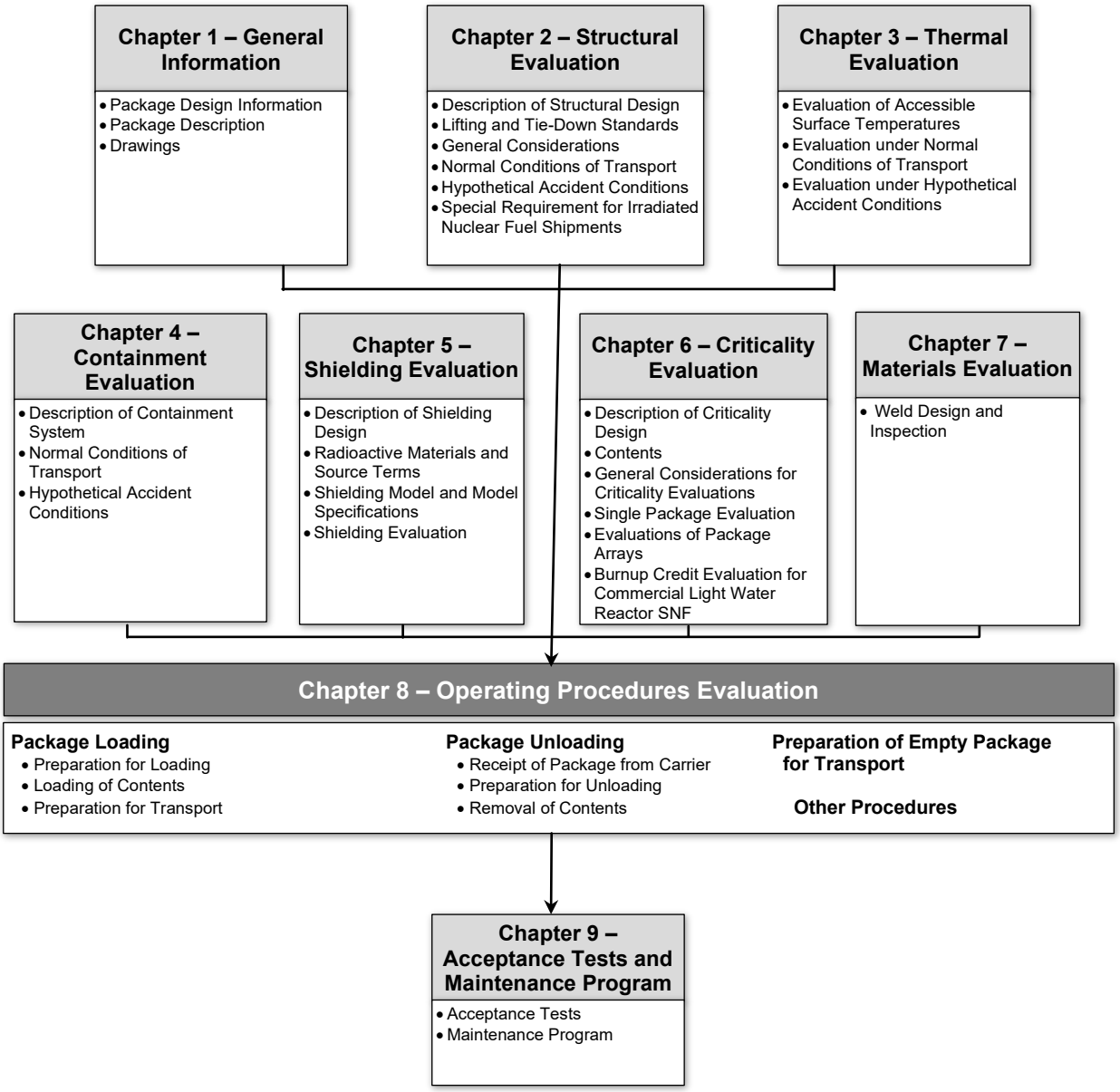

Figure 8-1 Information Flow for the Operating Procedures Evaluation

- The temperature survey requirements are described to verify that limits specified in 10 CFR 71.43(g) are not exceeded.

- The package leakage rate limits are specified and the package closures are leak tested in accordance with ANSI N14.5.

- Any system for containing liquid is properly sealed and has adequate space or other specified provision for expansion of the liquid.

- Any pressure-relief device is operable and properly set.

- Any structural component that could be used for lifting or tie-down during transport is rendered inoperable for that purpose unless it meets the design requirements of 10 CFR 71.45, “Lifting and Tie-Down Standards for All Packages.”

- A tamper-indicating device is incorporated that, while intact, indicates that the package has not been opened by unauthorized persons.

- For a fissile material shipment, any special controls and precautions for transport, loading, unloading, and handling and any appropriate actions in case of an accident or delay that should be provided to the carrier or consignee are described.

- Written instructions to the carrier are provided for packages that require exclusive-use shipment because of external radiation levels [see 10 CFR 71.47(b), 10 CFR 71.47(c), and 10 CFR 71.47(d)].

- The licensee has sent or made available to the consignee any special instructions needed to safely open the package before delivery of a package to a carrier for transport, in accordance with 10 CFR 20.1906(e).

- The package is properly labeled.

Also, for commercial SNF packages (low-enriched uranium or mixed oxide), coordinate the review with the materials and thermal reviewers to ensure the package operations include procedures to prevent fuel oxidation consistent with at least one of the options described in the Cover Gas subsection in Section 7.4.14.2 of this SRP.

8.4.2 Package Unloading

8.4.2.1 Receipt of package from carrier

Verify that the application describes the procedures for package receipt sequentially in the order of performance, and ensure that the procedure descriptions include, at a minimum, the following measures:

- any special actions to be taken if the tamper-indicating device is not intact, or if surface contamination or radiation survey levels are too high

- any special-handling equipment needed for unloading and handling the package

- a description of any proposed special controls and precautions for handling and unloading

- adherence to the requirements of 10 CFR 20.1906

- examination of the package for visible external damage

8.4.2.2 Preparations for unloading

Verify that the application describes the procedures for package unloading preparations sequentially in the order of performance, and ensure that the procedure descriptions include, at a minimum, the following measures:

- procedures controlling the radiation level limits on unloading operations

- procedures for the safe removal of fission or other radioactive gases, contaminated coolants, and solid contaminants, if any

8.4.2.3 Removal of contents

Verify that the application describes the procedures for removing the package contents sequentially in the order of performance, and ensure that the procedure descriptions include, at a minimum, the following measures:

- the appropriate method, including any special instructions, to open the package
- the appropriate method to remove the contents
- verification that the contents are completely removed

8.4.3 Preparation of Empty Package for Transport

Verify that the application describes the procedures for preparation of an emptying package for transport sequentially in the order of performance, and ensure that the procedure descriptions include, at a minimum, the following measures:

- verification that the transportation packaging is empty

- verification that external and internal contamination levels meet the requirements of 49 CFR 173.428

- a description of any special preparations of the packaging to ensure that the interior of the packaging is properly decontaminated and the package is closed and prepared for transport in accordance with the requirements of 49 CFR 173.428

- a description of the package-closure requirements

8.4.4 Other Procedures

Confirm that procedures for any special operational controls are included (e.g., route, weather, escorting, or shipping time restrictions), as needed.

8.5 Evaluation Findings

Prepare evaluation findings upon satisfaction of the regulatory requirements in Section 8.3 of this SRP chapter. If the documentation submitted with the application fully supports positive findings for each of the regulatory requirements, the statements of findings should be similar to the following:

F8-1 [If needed] The NRC staff has reviewed the proposed special controls and precautions for transport, loading, unloading, and handling and [if needed] the proposed special controls in case of accident or delay, and finds that they satisfy 10 CFR 71.35(c).

F8-2 The NRC staff has reviewed the description of the operating procedures and finds that the package will be prepared, loaded, transported, received, and unloaded in a manner consistent with its design and evaluation for approval.

F8-3 The NRC staff has reviewed the description of the special instructions (if applicable) needed to safely open a package and concludes that the procedures for providing the special instruction to the consignee are in accordance with the requirements of 10 CFR 71.89.

The reviewer should provide a summary statement similar to the following:

> Based on review of the statements and representations in the application, the NRC staff finds that the operating procedures have been adequately described and meet the requirements of 10 CFR Part 71.

8.6 References

10 CFR 20.1906, “Procedures for Receiving and Opening Packages.”

10 CFR Part 71, “Packaging and Transportation of Radioactive Material.”

49 CFR 173.428, “Empty Class 7 (Radioactive) Materials Packaging.”

49 CFR 173.443, “Contamination Control.”

Institute for Nuclear Materials Management, ANSI N14.5-2014, “American National Standard for Leakage Tests on Packages for Shipment of Radioactive Materials,” New York, NY.

Information Notice 2014-09, U.S. Nuclear Regulatory Commission, “Spent Fuel Storage or Transportation System Misloading,” June 20, 2014. Agencywide Documents Access and Management System Accession No. ML14121A469.

NUREG/CR-4775, U.S. Nuclear Regulatory Commission, “Guide for Preparing Operating Procedures for Shipping Packages,” UCID-20830, Lawrence Livermore National Laboratory, Livermore, CA, December 1988.

NUREG/CR-6007, U.S. Nuclear Regulatory Commission, “Stress Analysis of Closure Bolts for Shipping Casks,” UCR-ID-110637, Lawrence Livermore National Laboratory, Livermore, CA, April 1992.

9 ACCEPTANCE TESTS AND MAINTENANCE PROGRAM EVALUATION

9.1 Review Objective

The objective of this U.S. Nuclear Regulatory Commission (NRC) acceptance test and maintenance program evaluation is to verify that the acceptance tests for the packaging, as documented in the application, meet the requirements of Title 10 of the *Code of Federal Regulations* (10 CFR) Part 71, "Packaging and Transportation of Radioactive Material." This review will also verify that the maintenance program, as documented in the application, is adequate to assure packaging performance while in service.

9.2 Areas of Review

The NRC staff should review the application to verify that it adequately describes the package and includes adequately detailed drawings. In general, the staff should review the following information to determine the adequacy of the package description:

- acceptance tests
  - visual inspections and measurements
  - weld examinations
  - structural and pressure tests
  - leakage tests
  - component and material tests
  - neutron-absorber and moderator tests
  - shielding tests
  - thermal tests
- maintenance program
  - structural and pressure tests
  - leakage tests
  - component and materials tests
  - neutron-absorber and moderator tests
  - shielding tests
  - thermal tests
  - miscellaneous tests

9.3 Regulatory Requirements and Acceptance Criteria

This section summarizes those sections of 10 CFR Part 71 relevant to the review areas this standard review plan (SRP) chapter addresses. Table 9-1 provides a relationship between the relevant regulatory requirements and the areas of review. The NRC staff reviewer should refer to the exact language in the regulations.

Table 9-1 Relationship of Regulations and Areas of Review for Transportation Packages					
Area of Review	**10 CFR Part 71 Regulations**				
	71.31(c)	**71.37(b)**	**71.85 (a)(b)(c)**	**71.87(b)(g)**	**71.93(b)**
Acceptance tests	●	●	●	●	●
Maintenance program	●	●		●	●
Note: The bullet (●) indicates the entire regulation as listed in the column heading applies.					

9.3.1 Acceptance Tests

Before first use, each packaging must be subject to appropriate acceptance tests to verify that it was fabricated in accordance with its approved design and that its performance will meet the regulatory requirements of 10 CFR Part 71 and be consistent with the package's evaluations.

The application should discuss the package acceptance tests to be performed and the acceptance criteria to demonstrate structural, containment, shielding, criticality safety, and heat transfer performance.

The applicant should examine the components in accordance with appropriate codes and standards (see SRP Chapters 1, "General Information Evaluation;" 2, "Structural Evaluation;" and 7, "Materials Evaluation").

The applicant should perform leakage testing of the packaging in accordance with the American National Standards Institute (ANSI) N14.5, "Radioactive Materials—Leakage Tests on Packages for Shipment."

The applicant should conduct acceptance testing of lifting trunnions in accordance with NUREG-0612, "Control of Heavy Loads at Nuclear Power Plants," issued July 1980, ANSI N14.6, "Special Lifting Devices for Shipping Containers Weighing 10,000 Pounds (4500 kg) or More for Nuclear Materials," or other appropriate code specification.

9.3.2 Maintenance Program

The maintenance program should include periodic testing requirements, inspections, and replacement criteria and schedules for replacements and repairs of components on an as-needed basis.

The maintenance program should be adequate to assure that the packaging will perform as intended throughout its time in service.

9.4 Review Procedures

The NRC reviewer should ensure that the application specifies appropriate acceptance tests and maintenance program for the package. Some information may be contained in the application appendices. The tests and programs specified in the Acceptance Tests and Maintenance Program section of the application are usually incorporated by reference into the certificate of compliance (CoC) as conditions of package approval. For additional guidance on specific package types, refer to the appropriate section of Appendix A, "Description, Safety

Features, and Areas of Review for Different Types of Radioactive Material Transportation Packages," to this SRP.

9.4.1 Acceptance Tests

The acceptance tests review is based in part on the descriptions and evaluations presented in the General Information, Structural Evaluation, Thermal Evaluation, Containment Evaluation, Shielding Evaluation, Criticality Evaluation, Materials Evaluation, and Operating Procedures sections of the application and follows the sequence established to evaluate the packaging against applicable 10 CFR Part 71 requirements. Examples of application information flow into and within the acceptance tests review are shown in Figure 9-1.

Acceptance tests should address tests required by regulation (e.g., a pressure test as defined in 10 CFR 71.85(b), by industry code/consensus standard [e.g., the ASME Boiler and Pressure Valve (B&PV) Code, the American National Standards Institute (ANSI)], and those particular to the design. The specificity of the information may vary but should include test details (e.g., test conditions and methods, acceptance criteria, sensitivity, repeatability) and should be sufficient to determine whether the test will provide the information needed to evaluate the adequacy of the packaging.

The level of detail provided in the application may be related to whether the test is defined by a code. For example, radiographic examination of welds that are defined and controlled by the ASME B&PV Code; therefore, the application does not need to include those details. In addition, other tests, such as leakage tests, may need to be described in more detail to ensure that the test setup and equipment are appropriate for the package seal design and the allowable leakage rate.

Verify that the application specifies that applicable tests (described below) are to be performed before the first use of the packaging. Information presented on each test should include, at a minimum, a description of the test, the test procedure, and the acceptance criteria. Confirm that the application identifies the established codes, standards, and specific provisions of the quality assurance (QA) program used in all aspects of the packaging testing.

Each package must be fabricated in accordance with the drawings listed in the CoC.

NUREG/CR-3854, "Fabrication Criteria for Shipping Containers," issued March 1985, provides additional guidance on acceptance tests.

9.4.1.1 Visual inspections and measurements

Ensure that the application indicates that visual inspections are performed to verify that the packaging was fabricated and assembled in accordance with the drawings referenced in the CoC and other items specified in the CoC. Verify that the application directs that the dimensions and tolerances specified on the drawings are confirmed by taking measurements.

9.4.1.2 Weld examinations

Verify that the application indicates that weld examinations are performed to verify fabrication in accordance with the drawings, codes, and standards specified in the application to control weld quality. Verify that the application directs that the location, type, and size of the welds are

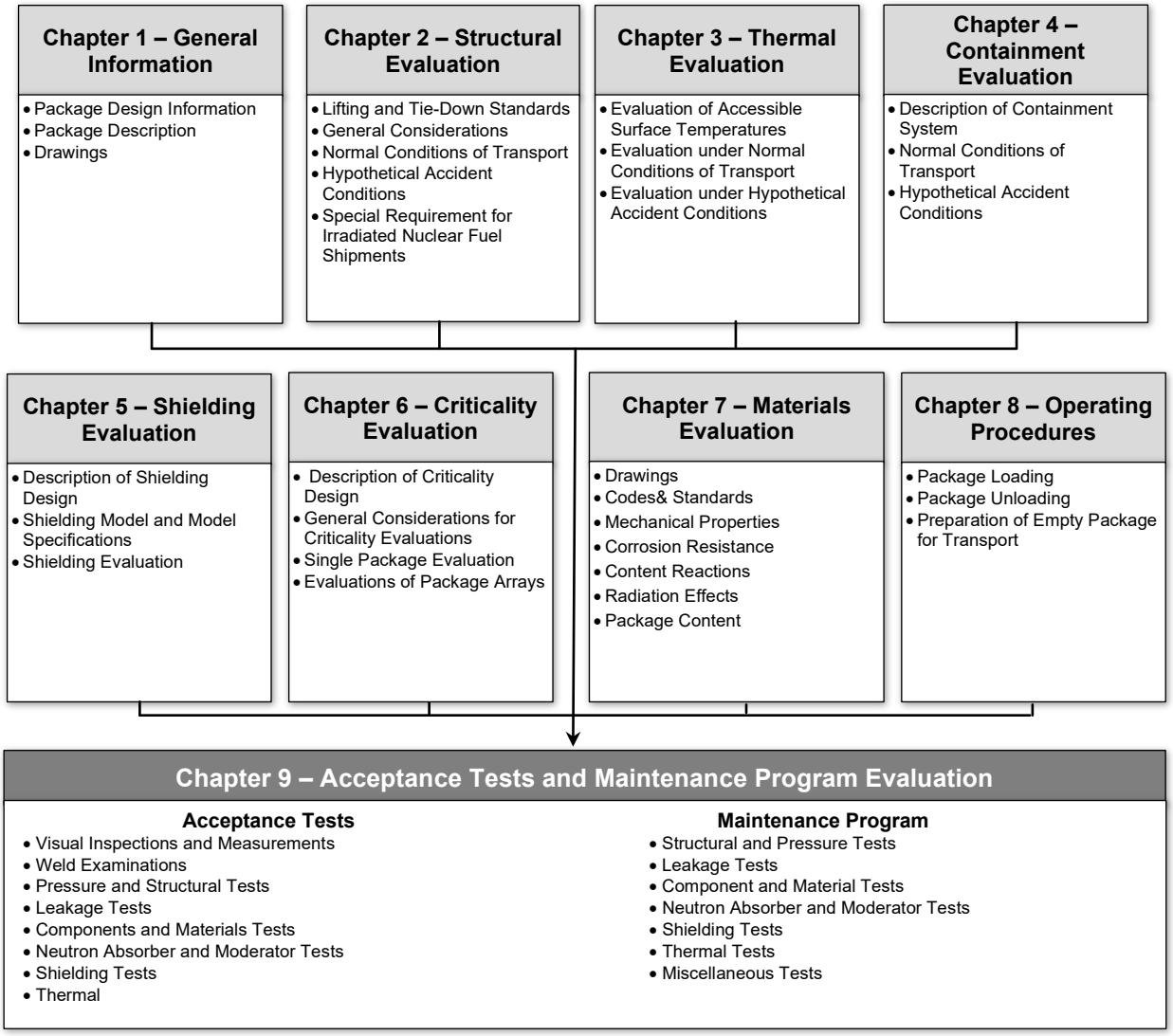

Figure 9-1 Information Flow for the Acceptance Tests and Maintenance Program Evaluation

confirmed by taking measurements. Verify other specifications for welds, examinations, and acceptance are confirmed as appropriate.

Additional guidance on welding criteria is provided in NUREG/CR-3019, “Welding Criteria for Use in the Fabrication of Radioactive Material Shipping Containers,” issued March 1984.

9.4.1.3 Structural and pressure tests

Verify that the application identifies and describes the structural or pressure tests. Such tests shall comply with 10 CFR 71.85(b) and applicable codes or standards specified in the application. Confirm that the application indicates that structural testing of lifting trunnions shall be conducted in accordance with NUREG-0612, ANSI N14.6, or other appropriate specification.

9.4.1.4 Leakage tests

Verify that the containment system of the packaging is subjected to fabrication and leakage tests of the containment boundary. These tests should be performed during the fabrication process such that subsequent fabrication procedures do not adversely affect the integrity of the containment boundary. Verify that all closures, including drains and vents, are leak-tested. Ensure that the acceptable leakage criterion is consistent with that identified in the Containment Evaluation section of the application. The NRC, through Regulatory Guide 7.4, "Leakage Tests on Packages for Shipment of Radioactive Materials," endorses the methods and procedures of leakage rate testing described in ANSI N14.5.

9.4.1.5 Component and material tests

Confirm that the application specifies the appropriate tests and acceptance criteria for components that affect package performance. Examples of such components include seals, gaskets, valves, fluid transport systems, and rupture disks or other pressure-relief devices. Verify that the application states that the components shall be tested to meet the performance specifications shown on the engineering drawings of the package. Ensure that the application describes applicable QA procedures to follow when a test adversely affects the continued performance of a component. Such procedures should provide justification that the tested component is equivalent to the component that will be used in the packaging.

Also, for spent nuclear fuel packages that rely on moderator exclusion to demonstrate compliance with 10 CFR 71.55(e), ensure that the application includes tests that will adequately demonstrate that packaging components relied on as barriers to water in-leakage will perform as credited in the analysis (i.e., to criteria consistent with the evaluation to keep water out).

Verify that the SAR specifies the appropriate tests and acceptance criteria for packaging materials. Tests for insulating materials (e.g., foams, fiberboard) should assure that minimum specifications for density and isotopic content are achieved. Verify that the SAR states that the materials are tested to meet the performance specifications shown on the engineering drawings. See Section 7.4.4 of this SRP for additional information on mechanical properties.

9.4.1.6 Neutron-absorber and moderator tests

Confirm that the application specifies appropriate tests and acceptance criteria for any neutron absorbers and any moderators that are packaging components. The tests for the absorbers should verify the amount and distribution of neutron-absorber nuclides in the absorber materials. Appropriate tests depend upon the amount of credit for the absorber nuclides in the criticality analysis. The tests and acceptance criteria should be sufficient to confirm that the absorbers meet the materials specifications in the drawings referenced in the CoC for the credit given to the absorber nuclides in the criticality evaluation. The tests for moderators should be adequate to verify that the moderator material specifications meet the properties (e.g., density, isotopic content such as hydrogen content) credited in the criticality evaluation and specified in the drawings referenced in the CoC. Coordinate this review with the materials and criticality reviewers. Section 7.4.7 of this SRP includes detailed guidance regarding qualification and acceptance tests for neutron absorbers.

9.4.1.7 Shielding tests

Ensure that the application specifies appropriate shielding tests for gamma and neutron radiation. Confirm that the tests and acceptance criteria are sufficient to verify that the as-fabricated packaging shielding meets the minimum shielding effectiveness specified in the drawings referenced in the CoC and used in the shielding evaluation. This includes ensuring no voids or streaming paths exist in the shielding and that the shielding meets the specified dimensional and material specifications (e.g., minimum density, boron content, and hydrogen content of neutron shields). Coordinate with the shielding and materials reviewers to ensure the adequacy of the shielding tests. Chapter 5, "Shielding Evaluation," of this SRP includes guidance regarding acceptance tests for shielding components (e.g., Sections 5.4.1.1 and 5.4.3.2).

9.4.1.8 Thermal tests

Verify that the SAR specifies the appropriate tests to demonstrate the heat-transfer capability of the packaging. Verify that these tests confirm the heat-transfer characteristics and the performance predicted in the Thermal Evaluation section of the SAR.

9.4.2 Maintenance Program

The maintenance program review is based in part on the descriptions and evaluations presented in the General Information, Structural Evaluation, Thermal Evaluation, Containment Evaluation, Shielding Evaluation, Criticality Evaluation, Materials Evaluation, and Operating Procedures sections of the application and follows the sequence established to evaluate the packaging against applicable 10 CFR Part 71 requirements. Examples of application information flow into and within the maintenance program review are shown in Figure 9-1.

The maintenance program should be adequate to assure that packaging effectiveness is maintained throughout its time in service. The specificity of the information should be consistent with the importance of the maintenance in assuring this continued performance. Verify that maintenance tests and inspections, including those that follow below, are described with schedules and criteria for each test or minor refurbishment and replacement of parts, as applicable. Confirm that the established codes, standards, and specific provisions of the QA program used in all aspects of the maintenance of the packaging are identified.

9.4.2.1 Structural and pressure tests

Verify that the SAR identifies and describes any periodic structural or pressure tests. Such tests would generally be conducted according to codes, standards, or other procedures specified in the SAR. Confirm that the SAR specifies that structural testing of lifting trunnions shall be conducted in accordance with NUREG-0612, ANSI N14.6, or other appropriate specification.

9.4.2.2 Leakage tests

Verify that the containment system of the packaging is subjected to maintenance and periodic leakage tests. The NRC, through Regulatory Guide 7.4, endorses the methods and procedures of leakage rate testing described in ANSI N14.5. Ensure that the acceptable leakage criterion is consistent with that identified in the Containment Evaluation chapter of the SAR. Elastomeric seals should be replaced and leak tested within the 12-month period preceding shipment, and metal seals should be replaced after each use.

9.4.2.3 Component and materials tests

Verify that the SAR describes the periodic tests and replacement schedules for components, as appropriate. Such components include valves, rupture disks, and seals.

Also, for spent nuclear fuel packages that rely on moderator exclusion to demonstrate compliance with 10 CFR 71.55(e), ensure that the application includes tests that will adequately demonstrate that packaging components relied on as barriers to water in-leakage will perform as credited in the analysis (i.e., to criteria consistent with the evaluation to keep water out).

Confirm that the SAR identifies any process that could result in the deterioration of packaging materials such as reduction in hydrogen content of neutron shields and density changes of insulating materials. Verify that the SAR specifies appropriate tests and their acceptance criteria to ensure packaging effectiveness for each shipment.

9.4.2.4 Neutron-absorber and moderator tests

Verify that the application identifies any process that could result in the deterioration of neutron-absorbing material and any moderators that are packaging components and specifies the appropriate tests to ensure continued effectiveness of the absorbers and moderators in the package. Coordinate with the materials and criticality reviewers to determine the acceptability of the tests in the application.

9.4.2.5 Shielding tests

Verify that the application identifies any processes that could result in degradation of the shielding components and specifies appropriate periodic tests and acceptance criteria to ensure continued effectiveness of the shielding components. Coordinate with the shielding and materials reviewers to determine the acceptability of the tests in the application. Consideration should be given to materials changes that shielding components may undergo with time and use. Such changes include density changes and reduction of important material constituents (e.g., hydrogen) and physical changes (e.g., cracking) in polymer-based neutron shields. Chapter 5 of this SRP includes guidance regarding acceptance tests for shielding components (e.g., Sections 5.4.1.1 and 5.4.3.2) that is also useful for evaluating periodic maintenance tests for package shielding.

9.4.2.6 Thermal tests

Verify that the SAR specifies and describes the appropriate periodic tests to demonstrate the heat-transfer capability of the packaging during its time in service. Tests similar to the acceptance tests may be applicable. The typical interval for periodic thermal tests is 5 years.

9.4.2.7 Miscellaneous tests

Confirm that the SAR describes any additional tests that should be performed periodically on the package or its components.

9.5 Evaluation Findings

Prepare evaluation findings on satisfaction of the regulatory requirements in Section 9.3. If the documentation submitted with the application fully supports positive findings for each of the regulatory requirements, the statements of findings should be similar to the following:

F9-1 The staff has reviewed the identification of the codes, standards, and provisions of the QA program applicable to the package design and finds that they meet the requirements specified in 10 CFR 71.31(c) and 10 CFR 71.37(b).

F9-2 The staff has reviewed the description of the preliminary determinations for the package before first use and finds that it meets the requirements of 10 CFR 71.85 and 10 CFR 71.87(g).

F9-3 The staff has reviewed the identification of the codes, standards, and provisions of the QA program applicable to maintenance of the packaging and finds that it meets the requirements specified in 10 CFR 71.31(c) and 10 CFR 71.37(b).

F9-4 The staff has reviewed the description of the routine determinations for package use preceding transport and finds that they meet the requirements of 10 CFR 71.87(b) and 10 CFR 71.87(g).

The reviewer should provide a summary statement similar to the following:

> Based on review of the statements and representations in the application, the NRC staff finds that the acceptance tests and maintenance program have been adequately described and meet the requirements of 10 CFR Part 71.

9.6 References

10 CFR Part 71, “Packaging and Transportation of Radioactive Material.”

American Society of Mechanical Engineers (ASME) Boiler and Pressure (B&PV) Code, 2017. Section III, “Rules for Construction of Nuclear Facility Components.” Division 3, “Containments for Transportation & Storage of Spent Nuclear Fuel and High Level Radioactive Material & Waste”

American National Standards Institute, ANSI N14.5–2014, *Institute for Nuclear Materials Management*, “Radioactive Materials—Leakage Tests On Packages for Shipment,” New York, NY.

ANSI N14.6–1993, *Institute for Nuclear Materials Management*, “Special Lifting Devices for Shipping Containers Weighing 10,000 Pounds (45000 kg) or More for Nuclear Materials,” New York, NY.

NUREG-0612, U.S. Nuclear Regulatory Commission, “Control of Heavy Loads at Nuclear Power Plants,” July 1980, Agencywide Documents Access and Management System (ADAMS) Accession No. ML070250180.

NUREG/CR-3019, U.S. Nuclear Regulatory Commission, “Recommended Welding Criteria for Use in the Fabrication of Shipping Containers for Radioactive Materials,” UCR-L53044, Lawrence Livermore National Laboratory, Livermore, CA, March 1984.

NUREG/CR-3854, U.S. Nuclear Regulatory Commission, “Fabrication Criteria for Shipping Containers,” UCRL-53544, Lawrence Livermore National Laboratory, Livermore, CA, March 1985.

Regulatory Guide 7.4, U.S. Nuclear Regulatory Commission, “Leakage Tests on Packages for Shipment of Radioactive Materials,” ADAMS Accession No. ML112520023.

10 QUALITY ASSURANCE EVALUATION

10.1 Review Objective

The objective of the U.S. Nuclear Regulatory Commission's (NRC's) quality assurance (QA) review is to verify that an application for a transportation package for radioactive material certificate includes a quality assurance program description (QAPD) or references a previously approved QA program. The QAPD must demonstrate that the applicant's QA program complies with the requirements of Title 10 of the *Code of Federal Regulations* (10 CFR) Part 71, "Packaging and Transportation of Radioactive Material," Subpart H, "Quality Assurance."

The basis for that determination is developed from an evaluation of the applicant's high-level QAPD against the 18 criteria provided in Section 10.4 of this standard review plan (SRP) chapter, 10 CFR Part 71, and any associated information found in the *Federal Register* since the last rulemaking has been completed, as applicable. (Note: The scope of review does not include actual procedures and instructions that implement the QA program, although they may be described in the QAPD.)

The determination that the applicant's QA program is in compliance occurs during the NRC inspection activities that evaluate implementation of the QA plan. (Note: The scope of an inspection does include the actual procedures and instructions that implement the QA program.)

10.2 Areas of Review

This chapter addresses the following areas of review:

- QA organization
- QA program
- package design control
- procurement document control
- instructions, procedures, and drawings
- document control
- control of purchased material, equipment, and services
- identification and control of materials, parts, and components
- control of special processes
- internal inspection
- test control
- control of measuring and test equipment
- handling, storage, and shipping control
- inspection, test, and operation status
- nonconforming materials, parts, or components
- corrective action
- QA records
- Audits

10.3 Regulatory Requirements and Acceptance Criteria

The NRC staff reviewer should refer to the exact language in 10 CFR Part 71, Subpart H. The acceptance criteria in Section 10.4 reflect the 18 quality criteria in 10 CFR Part 71, Subpart H, and

describe the information to be included in the applicant's QAPD. Examples of measures are provided for each criterion to assist the reviewer in determining whether the QAPD meets the applicable criterion. For each of the activities and items identified as important to safety, the applicant should identify the applicable QA programmatic elements and include, as applicable, provisions for meeting each of the quality criteria listed in Section 10.4 of this SRP chapter.

10.4 Review Procedures

The purpose of the QA review is to obtain reasonable assurance that the applicant has developed and described a QA program for activities associated with transportation packaging components important to safety. Those activities include design, procurement, fabrication, assembly, testing, modification, maintenance, repair, and use. An application for QA program approval or reference to a previously approved QA program will be included in the application. In the case that a reference to a previously approved program is submitted, the reviewer should verify that the referenced program is applicable to the applicant and NRC approved.

In the case that a QAPD is submitted with the package application, it is important that the applicant's QAPD provide sufficient detail to enable the reviewer to assess whether the applicant has committed to comply with the program and that the QA program complies with the applicable requirements in 10 CFR Part 71, Subpart H. Section 10.5 of this SRP describes the course of action if the reviewer determines that sufficient detail does not exist in the QAPD. If the QAPD indicates a commitment to follow certain standards or codes, then the reviewer should consider the commitments as an integral part of the QA program.

The applicant's QA program may be structured to apply QA measures and controls to all activities and items in proportion to their importance to safety, commonly referred to as a graded approach. The QAPD should address the use of a graded approach for the application of QA by adequately assigning appropriate grading classifications and providing an associated justification. However, an applicant may instead choose to apply the highest level of QA and control to all activities and items. The QA program should identify the items and attributes that are important to safety and the degree or category, as applicable, of their importance. For application of a graded approach, the highly important-to-safety activities and items must have a high level of quality control, whereas those less important may have a lower level of quality control. If the QA program is graded, the staff should be able to conclude that the structure of the graded program is acceptable and that the highest levels of QA are applied to those components that are most important to safety. In making determinations about the application of QA to those packaging components important to safety, coordinate with the appropriate NRC project manager and associated technical staff to possibly evaluate other sections or portions of the application. In evaluating the QA program, the QA reviewer may also use NUREG/CR-6314, "Quality Assurance Inspections for Shipping and Storage Containers," and Regulatory Guide 7.10, "Establishing Quality Assurance Programs for Packaging Used in Transport of Radioactive Material," as additional sources of information in determining the program's compliance with regulatory requirements.

If the reviewer finds the QAPD submitted as part of an application to be acceptable, this should be documented in the safety evaluation report (SER). The documentation of the review should include the basis for acceptance as noted in Section 10.5 of this SRP. Section 10.5 also describes the process for making any recommendations (requests for additional information process) for modifications to the application that are required before the application can be accepted. If a reference to a previously approved QAPD is submitted with the application, the verification of its applicability to the applicant and current NRC approval should also be documented in the SER.

10.4.1 Quality Assurance Organization

Ensure that the QAPD describes the structure, interrelationships, and areas of functional responsibility and authority for all organizational elements that will perform activities related to quality and safety. The following are examples of areas and items that may be addressed to support implementation of the quality criteria:

- measures to retain and exercise responsibility for the QA program; the assignment of responsibility for the overall QA program in no degree relieves line management of its responsibility for the achievement of quality

- measures to identify and describe the QA functions the applicant's QA organization performed or delegated to other organizations that will provide controls to ensure implementation of the applicable elements of the QA criteria

- measures to provide clear management controls and effective lines of communication between the applicant's QA organizations and suppliers to ensure proper direction of the QA program and resolution of QA-related problems

- measures to identify onsite and offsite organizational elements that will function under the purview of the QA program and the lines of responsibility

- measures to designate a position that retains overall authority and responsibility for the QA program (e.g., manager or director of QA) and independently reports to at least the same organizational level authority as the highest line manager directly responsible for performing activities affecting quality

- measures to ensure that high-level management is responsible for documenting and promulgating the applicant's QA policies, goals, and objectives, and that this management level maintains a continuing involvement in QA matters; the application should also describe the lines of communication between intermediate levels of management and between high-level management and the manager (or director) of QA

- measures to provide authority and independence of the individual responsible for managing the QA program such that he or she can direct and control the organization's QA program, effectively ensure conformance to quality requirements, and remain sufficiently independent of undue influences and responsibilities of schedules and costs

- measures for individuals or groups responsible for defining and controlling the content of the QA program and related manuals to have appropriate organizational position and authority, as should the management level responsible for final review and approval

- measures describing the qualification requirements for the principal QA management positions so as to demonstrate management and technical competence commensurate with the responsibilities of these positions

- measures to ensure that conformance to established requirements will be verified by individuals or groups who do not have direct responsibility for performing the work being verified; the quality control function may be part of the line organization, provided the QA organization performs periodic surveillance to confirm sufficient independence from the individuals who performed the activities

- measures to ensure that persons and organizations performing QA functions have direct access to management levels that will ensure accomplishment of quality-affecting activities; these individuals should have sufficient authority and organizational freedom to perform their QA functions effectively and without reservation and should be able to identify quality problems; initiate, recommend, or provide solutions through designated channels; and verify implementation of solutions

- measures to ensure that designated QA individuals or organizations have the responsibility and authority, delineated in writing, to stop unsatisfactory work and control further processing, delivery, or installation of nonconforming material; the application should describe how stop-work requests will be initiated and completed

- measures to determine the extent of QA controls to be identified by the QA staff in combination with the line staff and to depend on the specific activity or item complexity and level of importance to safety

10.4.2 Quality Assurance Program

Ensure that the QAPD provides acceptable evidence that the applicant's proposed QA program will be well documented, planned, implemented, and maintained to provide the appropriate level of control over activities and packaging components consistent with their relative importance to safety. The following are examples of areas and items that may be addressed to support implementation of the quality criteria:

- measures used to ensure that the QA program meets applicable acceptance criteria

- measures for management to regularly assess the effectiveness of the QA program; measures for management (above and beyond the QA organization) to regularly assess the scope, status, adequacy, and compliance of the QA program to the requirements of 10 CFR Part 71; measures to provide for management's frequent appraisal of program status through reports, meetings, and audits as well as performance of a periodic assessment that is planned and documented with corrective actions identified and tracked

- measures to ensure that activities important to safety are accomplished using appropriate production and test equipment, suitable environmental conditions, applicable codes and standards, and proper work instructions

- measures used to ensure that trained, qualified personnel within the organization will be assigned to determine that functions delegated to contractors are properly accomplished

- summaries of the corporate QA policies, goals, and objectives and establishment of a meaningful channel for transmittal of these policies, goals, and objectives down through the levels of management

- measures to designate responsibilities for implementing the major activities addressed in the QA manuals

- measures to control the distribution of the QA manuals and revisions

- measures for communicating to all responsible organizations and individuals that policies, QA manuals, and procedures are mandatory requirements

- measures to provide a comprehensive listing of QA procedures, as well as a matrix of these procedures cross-referenced to each of the QA criteria, to demonstrate that the QA program will be fully implemented by documented procedures

- identification of packaging components, items, and attributes important to safety and how the QA program will control them

- measures for the applicant to review supplier documents for agreement with QA program provisions and ensure implementation of a program meeting the QA criteria

- measures for the resolution of disputes involving quality arising from a difference of opinion between QA personnel and personnel from other departments (e.g., engineering, procurement, manufacturing)

- measures for indoctrination, training, and qualification programs that fulfill the following criteria:

  — instruction of personnel responsible for performing activities affecting quality as to the purpose, scope, and implementation of the quality-related manuals, instructions, and procedures

  — training and qualification in the principles and techniques of the activities being performed for personnel performing activities affecting quality

  — maintenance of the proficiency of personnel performing quality-affecting activities by retraining, reexamining, and recertifying

  — preparation and maintenance of documentation of completed training and qualification

  — qualification of personnel in accordance with accepted codes and standards

10.4.3 Package Design Control

Ensure that the QAPD describes the approach the applicant will use to define, control, and verify the design and development of the transportation packaging. The following are examples of areas and items that may be addressed to support implementation of the quality criteria:

- measures to carry out design activities in a planned, controlled, and orderly manner

- measures to correctly translate the applicable regulatory requirements and design bases into specifications, drawings, written procedures, and instructions

- measures to describe how the applicant will specify quality standards in the design documents and control deviations and changes from these quality standards

- measures to describe how the applicant will review designs to ensure that design characteristics can be controlled, inspected, and tested and that inspection and test criteria are identified

- measures to describe how the applicant will establish both internal and external design-interface controls; these controls should include review, approval, release, distribution, and revision of documents involving design interfaces with participating design organizations

- measures to describe how the applicant will properly select and perform design verification processes such as design reviews, alternative calculations, or qualification testing; when a test program is to be used to verify the adequacy of a design, measures to describe how the applicant will use a qualification test of a prototype unit under adverse design conditions

- measures to ensure that design verifications (i.e., confirmation that the design of the packaging component is suitable for its intended purpose) are completed by an individual with a level of skill at least equal to that of the original designer; measures to ensure design checking is also performed, recognizing design checking can be performed by a less-experienced person (as an example, confirmation that the correct computer code has been used is part of design verification. Design checking includes confirmation of the numerical accuracy of computations and the accuracy of data input to computer codes); measures to describe how design verification will be performed by persons other than those performing design checking; measures to include how individuals or groups responsible for design verification will not include the original designer and normally not include the designer's immediate supervisor

- measures to ensure that design and specification changes are subject to the same design controls and the same or equivalent approvals that were applicable to the original design

- measures to ensure the documentation of all errors and deficiencies in the design or the design process that could adversely affect packaging components, items, and attributes important to safety; measures for adequate corrective action, including root cause evaluation of significant errors and deficiencies, to preclude repetition

- measures to review the suitability of any materials, parts, and equipment for the intended application before selecting such items that are standard, commercial (off-the-shelf), or have been previously approved for a different application

- measures to provide written procedures to identify and control the authority and responsibilities of all individuals or groups responsible for design reviews and other design-verification activities

- measures that include the use of valid industry standards and specifications for the selection of suitable materials, parts, equipment, and processes for packaging components important to safety

10.4.4 Procurement Document Control

Ensure that documents used to procure packaging components or services include or reference applicable design bases and other requirements necessary to ensure adequate quality. The following are examples of areas and items that may be addressed to support implementation of the quality criteria:

- measures to establish procedures that clearly delineate the sequence of actions to be accomplished in the preparation, review, approval, and control of procurement documents

- measures to ensure that qualified personnel review and concur with the adequacy of quality requirements stated in procurement documents and ensure that the quality requirements are correctly stated, inspectable, and controllable; there are adequate acceptance and rejection criteria; and the procurement document has been prepared, reviewed, and approved in accordance with QA program requirements

- measures to document the review and approval of procurement documents before they are released, with the documentation available for verification

- measures to ensure that procurement documents identify the applicable QA requirements that should be compiled and described in the supplier's QA program and to ensure that the applicant reviews and concurs with the supplier's QA program; if subtier suppliers are also used, measures to ensure that the supplier's QA program applies to the subtier suppliers

- measures to ensure that procurement documents contain or reference the regulatory requirements, design bases, and other technical requirements

- measures to ensure that procurement documents identify the documentation (e.g., drawings, specifications, procedures, inspection and fabrication plans, inspection and test records, personnel and procedure qualifications, and chemical and physical test results of material) to be prepared, maintained, and submitted to the purchaser for review and approval

- measures to ensure that procurement documents identify records to be retained, controlled, and maintained by the supplier and those records to be delivered to the purchaser before use or installation of the hardware

- measures to ensure that procurement documents specify the procuring agency's right of access to the supplier's facilities and records for source inspection and audit

- measures to ensure that changes and revisions to procurement documents are subject to the same or equivalent review and approval as the original documents

10.4.5 Instructions, Procedures, and Drawings

Ensure that the QAPD defines the applicant's proposed procedures for ensuring that activities affecting quality will be prescribed by, and performed in accordance with, documented instructions, procedures, or drawings of a type appropriate for the circumstances. The following are examples of areas and items that may be addressed to support implementation of the quality criteria:

- measures to ensure that activities affecting quality are prescribed and accomplished in accordance with documented instructions, procedures, or drawings

- measures to establish provisions that clearly delineate the sequence of actions to be accomplished in the preparation, review, approval, and control of instructions, procedures, and drawings

- measures to ensure that instructions, procedures, and drawings specify the methods for complying with each of the applicable QA criteria

- measures to ensure that instructions, procedures, and drawings include quantitative acceptance criteria (such as dimensions, tolerances, and operating limits) as well as qualitative acceptance criteria (such as workmanship samples) as verification that activities important to safety have been satisfactorily accomplished

- measures to ensure that the QA organization reviews and concurs with the procedures, drawings, and specifications related to inspection plans, tests, calibrations, and special processes, as well as any subsequent changes to these documents

10.4.6 Document Control

Ensure that the QAPD defines the applicant's proposed procedures for preparing, issuing, and revising documents that specify quality requirements or prescribe activities affecting quality. The following are examples of areas and items that may be addressed to support implementation of the quality criteria:

- identification of all documents to be controlled under this subsection, including, as a minimum, design specifications; design and fabrication drawings; procurement documents; QA manuals; design-criteria documents; fabrication, inspection, and testing instructions; and test procedures

- measures to ensure the establishment of procedures to control the review, approval, and issuance of documents, and any subsequent changes, before release to ensure that the documents are adequate and applicable quality requirements are stated

- measures to ensure the establishment of provisions to identify individuals or groups responsible for reviewing, approving, and issuing documents and subsequent revisions to the documents

- measures to ensure that document revisions receive review and approval by the same organizations that performed the original review and approval or by other qualified responsible organizations the applicant designated

- measures to ensure that approved changes are included in instructions, procedures, drawings, and other documents before the change is implemented

- measures to ensure the control of obsolete or superseded documents to prevent inadvertent use

- measures to ensure that documents are available at the location where the activity is performed

- measures to ensure the establishment of a master list (or equivalent) to identify the current revision number of instructions, procedures, specifications, drawings, and procurement documents; measures to ensure the updating and distribution of the list to predetermined, responsible personnel to avoid the use of superseded documents

10.4.7 Control of Purchased Material, Equipment, and Services

Ensure that the QAPD defines the applicant's proposed procedures for controlling purchased material, equipment, and services to ensure conformance with specified requirements. The

following are examples of areas and items that may be addressed to support implementation of the quality criteria:

- measures to ensure that qualified personnel evaluate the supplier's capability to provide services and products of acceptable quality before the award of the procurement order or contract; measures to ensure that QA and engineering groups participate in the evaluation of those suppliers providing critical items and services important to safety, including a definition of the responsibilities for each participating group

- measures to ensure the evaluation of suppliers should consider establishing the following provisions (if applicable):

  — the supplier's capability to comply with the elements of the QA criteria that are applicable to the type of material, equipment, or service being procured

  — review of previous records and performance of suppliers that have provided similar articles or services of the type being procured

  — a survey of the supplier's facilities and QA program to assess the capability to supply a product that meets applicable design, manufacturing, and quality requirements

- measures to ensure the documentation and filing of the results of supplier evaluations

- measures to ensure the planning and performance of adequate surveillance of suppliers during fabrication, inspection, testing, and shipment of materials, equipment, and components in accordance with written procedures to ensure conformance to the purchase-order requirements; the measures should ensure that the procedures provide the following information:

  — instructions that specify the characteristics or processes to be witnessed, inspected or verified, and accepted; the method of surveillance and the extent of documentation required; and those responsible for implementing these instructions

  — procedures for audits and surveillance to ensure that the supplier complies with the quality requirements (surveillance should be performed for packaging components for which verification of procurement requirements cannot be determined upon receipt)

- measures to ensure that the supplier furnishes the following records to the purchaser:

  — documentation that identifies the purchased material or equipment and the specific procurement requirements (e.g., codes, standards, and specifications) met by the items

  — documentation that identifies any procurement requirements that have not been met and a description of any nonconformances designated "accept as is" or "repair"

- measures to describe the proposed procedures for reviewing and accepting these documents and, as a minimum, to ensure that this review and acceptance will be undertaken by a responsible QA individual

- measures to ensure the performance of periodic audits, independent inspections, or tests to ensure the validity of the suppliers' certificates of conformance

- measures to ensure the performance of a receiving inspection of supplier-furnished material, equipment, and services to ensure fulfillment of the following criteria:

  — proper identification of the material, component, or equipment in a manner that corresponds with the identification on the purchasing and receiving documentation

  — inspection of material, components, equipment, and acceptance records and judgment of their acceptability in accordance with predetermined inspection instructions before installation or use

  — availability of inspection records or certificates of conformance attesting to the acceptance of material, components, and equipment before installation or use

  — identification of the inspection status for accepted items and ensuring associated markings are attached before the accepted items are forwarded to a controlled storage area or released for installation or further work

- measures to assess the effectiveness of suppliers' quality controls at intervals consistent with the importance to safety, complexity, and quantity of the packaging components procured

10.4.8 Identification and Control of Materials, Parts, and Components

Ensure that the QAPD defines the applicant's proposed provisions for identifying and controlling materials, parts, and components to ensure that incorrect or defective packaging components are not used. The following are examples of areas and items that may be addressed to support implementation of the quality criteria:

- measures to establish procedures to identify and control materials, parts, and components (including partially fabricated subassemblies)

- measures to determine identification requirements during the generation of specifications and design drawings

- measures to ensure that identification will be maintained either on the item or on records traceable to the item to preclude the use of incorrect or defective items

- measures to ensure that the identification of materials and parts for items important to safety is traceable to the appropriate documentation (such as drawings, specifications, purchase orders, manufacturing and inspection documents, deviation reports, and physical and chemical mill test reports)

- measures to ensure that the location and method of identification do not affect the fit, function, or quality of the item being identified

- measures to verify and document the correct identification of all materials, parts, and components before releasing them for fabrication, assembly, shipping, and installation

10.4.9 Control of Special Processes

Ensure that the QAPD describes the controls the applicant will establish to ensure the acceptability of special processes (such as welding, heat treatment, nondestructive testing, and chemical cleaning) and that the proposed controls are performed by qualified personnel using qualified procedures and equipment. The following are examples of areas and items that may be addressed to support implementation of the quality criteria:

- measures to establish procedures to control special processes (such as welding, heat treating, nondestructive testing, and cleaning) for which direct inspection is generally impossible or disadvantageous, as well as providing a listing of these special processes

- measures to qualify procedures, equipment, and personnel connected with special processes in accordance with applicable codes, standards, and specifications

- measures to ensure that qualified personnel perform special processes in accordance with written process sheets (or the equivalent) with recorded evidence of verification

- measures to establish, file, and keep current qualification records of procedures, equipment, and personnel associated with special processes

10.4.10 Internal Inspection

Ensure that the QAPD defines the applicant's proposed provisions for the inspection of activities affecting quality to verify conformance with instructions, procedures, and drawings. The following are examples of areas and items that may be addressed to support implementation of the quality criteria:

- measures to establish, document, and conduct an inspection program that effectively verifies the conformance of quality-affecting activities with requirements in accordance with written, controlled procedures

- measures to ensure that inspection personnel are sufficiently independent from the individuals performing the activities being inspected

- measures to ensure that inspection procedures, instructions, and checklists provide the following details:

  — identification of characteristics and activities to be inspected

  — identification of the individuals or groups responsible for performing the inspection operation

  — acceptance and rejection criteria

  — a description of the method of inspection

  — procedures for recording evidence of completing and verifying a manufacturing, inspection, or test operation

— identification of the recording inspector or data recorder and the results of the inspection operation

- measures to ensure the use of inspection procedures or instructions with the necessary drawings and specifications when performing inspection operations
- measures to qualify inspectors in accordance with applicable codes, standards, and company training programs and to keep inspector qualifications and certifications current
- measures to inspect modifications, repairs, and replacements in accordance with the original design and inspection requirements or acceptable alternatives
- measures to establish provisions that identify mandatory inspection hold points for witnessing by a designated inspector
- measures to identify the individuals or groups who will perform receiving and process verification inspections, demonstrating that these individuals or groups have sufficient independence and qualifications
- measures to establish provisions for indirect control by monitoring processing methods, equipment, and personnel if direct inspection is not possible

10.4.11 Test Control

Ensure that the QAPD defines the applicant's proposed provisions for tests to verify that packaging components important to safety conform to specified requirements and will perform satisfactorily in service. The following are examples of areas and items that may be addressed to support implementation of the quality criteria:

- measures to establish, document, and conduct a test program to demonstrate that the item will perform satisfactorily in service in accordance with written, controlled procedures
- measures to ensure that written test procedures incorporate or reference the following information:

  — requirements and acceptance limits contained in applicable design and procurement documents

  — instructions for performing the test

  — test prerequisites

  — mandatory inspection hold points

  — acceptance and rejection criteria

  — methods of documenting or recording test data results

- measures to ensure a qualified, responsible individual or group documents test results and evaluates their acceptability; when practicable, the measures should ensure that testing of the packaging component occurs under suitable environmental conditions.

10.4.12 Control of Measuring and Test Equipment

Ensure that the QAPD defines the applicant's proposed provisions to ensure that tools, gauges, instruments, and other measuring and testing devices are properly identified, controlled, calibrated, and adjusted at specified intervals. The following are examples of areas and items that may be addressed to support implementation of the quality criteria:

- measures to ensure that documented procedures describe the calibration technique and frequency, maintenance, and control of all measuring and test equipment (instruments, tools, gauges, fixtures, reference and transfer standards, and nondestructive test equipment) that will be used in the measurement, inspection, and monitoring of packaging components important to safety

- measures to ensure that measuring and test equipment are identified and traceable to the calibration test data

- measures to ensure the use of labels, tags, or documents for measuring and test equipment to indicate the date of the next scheduled calibration and to provide traceability to calibration test data

- measures to calibrate measuring and test instruments at specified intervals on the basis of the required accuracy, precision, purpose, degree of usage, stability characteristics, and other conditions that could affect the accuracy of the measurements

- measures to assess the validity of previous inspections when measuring and test equipment is found to be out of calibration, and measures to document the assessment and to take control of the equipment that is out of calibration

- measures to document and maintain the complete status of all items under the calibration system

- measures to ensure that reference and transfer standards are traceable to nationally recognized standards, or to document the basis for calibration where national standards do not exist

10.4.13 Handling, Storage, and Shipping Control

Ensure that the QAPD defines the applicant's proposed provisions to control the handling, storage, shipping, cleaning, and preservation of packaging components important to safety in accordance with work and inspection instructions to prevent damage, loss, and deterioration. The following are examples of areas and items that may be addressed to support implementation of the quality criteria:

- measures to establish and accomplish special handling, preservation, storage, cleaning, packaging, and shipping requirements in accordance with predetermined work and inspection instructions

- measures to control the cleaning, handling, storage, packaging, shipping, and preservation of materials, components, and systems in accordance with design and specification requirements to preclude damage, loss, or deterioration by environmental conditions (such as temperature or humidity)

10.4.14 Inspection, Test, and Operating Status

Ensure that the QAPD defines the applicant's proposed provisions to control the inspection, test, and operating status of packaging components important to safety to prevent the inadvertent use of components or bypassing of inspections and tests. The following are examples of areas and items that may be addressed to support implementation of the quality criteria:

- measures to know the inspection and test status of items throughout fabrication and use
- measures to establish procedures to control the application and removal of inspection and welding stamps and operating status indicators (such as tags, markings, labels, and stamps)
- measures to ensure that procedures under the cognizance of the QA organization control the bypassing of required inspections, tests, and other critical operations
- measures to specify the organization responsible for documenting the status of nonconforming, inoperative, or malfunctioning packaging components and for identifying the item to prevent inadvertent use

10.4.15 Nonconforming Materials, Parts, or Components

Ensure that the QAPD defines the applicant's proposed provisions to control the use or disposition of nonconforming materials, parts, or components. The following are examples of areas and items that may be addressed to support implementation of the quality criteria:

- measures to establish procedures to control the identification, documentation, tracking, segregation, review, disposition, and notification of affected organizations regarding nonconforming materials, parts, components, services, or activities
- measures to provide for adequate documentation to identify nonconforming items and describe the nonconformance, its disposition, and the related inspection requirements; such measures should also provide for adequate documentation and include signature approval of the disposition
- measures to establish provisions to identify those individuals or groups with the responsibility and authority for the disposition and closeout of nonconformance
- measures to ensure that nonconforming items are segregated from acceptable items and identified as discrepant until properly dispositioned and closed out
- measures to verify the acceptability of reworked or repaired materials, parts, and components by reinspecting and retesting the item as originally inspected and tested or by using a method that is at least equal to the original inspection and testing method; the measures should provide for documentation of the relevant inspection, testing, rework, and repair procedures
- measures to ensure that nonconformance reports designated "accept as is" or "repair" are made part of the inspection records and forwarded with the hardware to the customer for review and assessment

- measures to periodically analyze nonconformance reports to show quality trends and help identify root causes of nonconformance. Significant results should be reported to responsible management for review and assessment

10.4.16 Corrective Action

Ensure that the QAPD defines the applicant's proposed provisions to ensure that conditions adverse to quality are promptly identified and corrected, and for significant conditions adverse to quality, that measures are taken to preclude recurrence. The following are examples of areas and items that may be addressed to support implementation of the quality criteria:

- measures to evaluate conditions adverse to quality (such as nonconformance, failures, malfunctions, deficiencies, deviations, and defective material and equipment) in accordance with established procedures to assess the need for corrective action

- measures to initiate corrective action to preclude the recurrence of a condition identified as adverse to quality

- measures to conduct follow-up activities to verify proper implementation of corrective actions and close out the corrective action documentation in a timely manner

- measures to document significant conditions adverse to quality, as well as the root causes of the conditions, and the corrective actions taken to remedy and preclude recurrence of the conditions; this information should be reported to cognizant levels of management for review and assessment

10.4.17 Quality Assurance Records

Ensure that the QAPD defines the applicant's proposed provisions for identifying, retaining, retrieving, and maintaining records that document evidence of the control of quality for activities and packaging components important to safety. The following are examples of areas and items that may be addressed to support implementation of the quality criteria:

- measures to define the scope of the records program such that sufficient records will be maintained to provide documentary evidence of the quality of items and activities affecting quality; to minimize the retention of unnecessary records, the records program should list records to be retained by type of data rather than by record title

- measures to ensure that QA records include operating logs; results of reviews, inspections, tests, audits, and material analyses; monitoring of work performance; qualification of personnel, procedures, and equipment; and other documentation such as drawings, specifications, procurement documents, calibration procedures and reports, design review and peer review reports, nonconformance reports, and corrective action reports

- measures to ensure that records are identified and retrievable

- Measures to ensure that requirements and responsibilities for record creation, transmittal, retention (such as duration, location, fire protection, and assigned responsibilities), and maintenance subsequent to completion of work are consistent with applicable codes, standards, and procurement documents

- measures to ensure that inspection and test records contain the following information, where applicable:

  — a description of the type of observation
  — the date and results of the inspection or test
  — information related to conditions adverse to quality
  — identification of the inspector or data recorder
  — evidence as to the acceptability of the results
  — action taken to resolve any noted discrepancies

- measures to ensure that record storage facilities are constructed, located, and secured to prevent destruction of the records by fire, flood, theft, and deterioration by environmental conditions (such as temperature or humidity); measures to ensure that the facilities are maintained by, or under the control of, the certificate holder throughout the life of the packaging(s)

10.4.18 Audits

Ensure that the QAPD defines the applicant's proposed provisions for planning and scheduling audits to verify compliance with all aspects of the QA program and to determine the effectiveness of the overall program. The following are examples of areas and items that may be addressed to support implementation of the quality criteria:

- measures to perform audits in accordance with written procedures or checklists such that qualified personnel tasked with performing these audits do not have direct responsibility for the achievement of quality in the areas being audited

- measures to ensure that audit results are documented and reviewed by management with responsibility in the area audited

- measures to establish provisions for responsible management to undertake appropriate corrective action as a follow up to audit reports; the measures should ensure that auditing organizations schedule and conduct appropriate follow up to ensure that the corrective action is effectively accomplished

- measures to perform both technical and QA programmatic audits to achieve the following objectives:

  — comprehensive, independent verification and evaluation of procedures and activities affecting quality

  — verification and evaluation of the suppliers' QA programs, procedures, and activities

- measures to ensure that appropriately qualified and certified audit personnel from the QA organization lead the audits; measures to ensure that the audit team membership includes personnel (not necessarily QA organization personnel) with technical expertise in the areas being audited

- measures to schedule regular audits on the basis of the status and importance to safety of the activities being audited; measures to provide that audits are initiated early enough to ensure effective QA during design, procurement, and contracting activities

- measures to analyze and trend audit deficiency data as well as ensure that the resulting reports, indicating quality trends and the effectiveness of the QA program, are given to management for review, assessment, corrective action, and follow up

- measures to ensure that audits objectively assess the effectiveness and proper implementation of the QA program and address the technical adequacy of the activities being conducted

- measures to establish provisions requiring the performance of audits in all areas to which the requirements of the QA program apply

10.5 Evaluation Findings

If the package application included the QAPD, the NRC reviewer should prepare evaluation findings upon satisfaction of the regulatory requirements in Section 10.3 of this SRP. If the reviewer determines that the applicant's QAPD does not adequately address the requirements in 10 CFR Part 71, a request for additional information (RAI) must be prepared and submitted to the NRC project manager to be forwarded to the applicant for resolution and response to the NRC. If the reviewer concludes that information provided with the application, along with additional information provided in response to the NRC's RAI, shows that the QAPD meets the requirements, statements of finding similar to the following should be included in the staff's SER:

F10.1 The staff has reviewed the applicant's description of the QA program and concludes that the requirements, procedures, and controls, when properly implemented, should comply with the requirements of 10 CFR Part 71, Subpart H.

F10.2 The staff has reviewed the applicant's description of the QA program and concludes that it covers activities affecting packaging components, items, and attributes important to safety, as identified in the application.

F10.3 The staff has reviewed the applicant's description of the QA program and concludes that it covers activities affecting other packaging components, items, and attributes with consideration of their relative importance to safety, as identified in the application.

F10.4 The staff has reviewed the applicant's description of the QA program and concludes that it describes organizations and persons performing QA functions, indicating that sufficient independence and authority should exist to perform their functions without undue influence from those directly responsible for costs and schedules.

F10.5 The staff has reviewed the applicant's description of the QA program and concludes that it is in compliance with applicable NRC regulations and industry standards, and the acceptance of the QA program description by NRC allows implementation of the associated QA program for the design, procurement, fabrication, assembly, testing, modification, maintenance, repair, and use of transportation packagings.

The reviewer should provide a summary statement similar to the following when providing input to the SER:

- The staff finds, with reasonable assurance, that the QA program for transportation packaging meets the requirements in 10 CFR Part 71 and addresses all 18 criteria as required in Subpart H to 10 CFR Part 71. The staff also finds, with reasonable assurance,

that the QA program encompasses design controls, materials and services procurement controls, records and document controls, fabrication controls, nonconformance and corrective actions controls, an audit program, and operations or programs controls, as appropriate, adequate to ensure that the package will allow safe transport of the radioactive material authorized in this approval. The staff reached this finding based on a review that considered applicable NRC regulations and regulatory guides and the statements and representations contained in the application.

If the package application included a reference to a previously approved QAPD, the NRC reviewer should document in the SER, upon satisfaction of a referenced QAPD, that it is applicable to the applicant and approved by the NRC.

10.6 References

10 CFR Part 71, “Packaging and Transportation of Radioactive Material.”

NUREG/CR-6314, “Quality Assurance Inspections for Shipping and Storage Containers,” INEL95-0061, Idaho National Engineering Laboratory, Idaho Falls, ID, April 1996.

Regulatory Guide 7.10, “Establishing Quality Assurance Programs for Packaging Used in Transport of Radioactive Material,” Revision 3, June 2015.

11 GLOSSARY

The U.S. Nuclear Regulatory Commission (NRC) staff has defined the terms provided in this section for the purposes of this standard review plan (SRP). Many of the terms are taken from Title 10 of *Code of Federal Regulations* (10 CFR) 20.1004, "Units of Radiation Dose," 10 CFR 71.4, "Definitions," or 49 CFR 173.403, "Definitions." Standards are expressed in the International System of Units (SI). The U.S. standard or customary unit equivalents presented in parentheses are for reader convenience.

A_1. See 10 CFR 71.4.

A_2. See 10 CFR 71.4.

Assembly defect. Any change in the physical as-built condition of the spent fuel assembly except for normal in-reactor changes such as elongation from irradiation growth or assembly bow. Examples of assembly defects include: (a) missing rods, (b) broken or missing grids or grid straps (spacers), and (c) missing or broken grid springs.

Benchmarking. Establishing a predictable relationship between calculated results and reality. The main goal of benchmarking is a quantitative understanding of the difference, or "bias," between calculated and expected results and the uncertainty in this difference (bias uncertainty). Also known as code or method "validation."

Breached spent fuel rod. A spent fuel rod with cladding defects that permit the release of gases or solid fuel particulates from the interior of the fuel rod. SNF rod breaches include pinhole leaks, hairline cracks, or gross ruptures.

Burnup. The measure of the thermal power produced in a specific amount of nuclear fuel through fission, usually expressed in units of gigawatt days per metric ton uranium (GWd/MTU). For the purpose of assessing the allowable contents, the maximum burnup(s) of the fuel should be specified in terms of the average burnup of the entire fuel assembly (i.e., assembly average). Additionally, for SNF criticality analyses that rely on burnup credit, a minimum required assembly-average burnup will be specified. For the purpose of assessing fuel-cladding integrity in the materials review, the rod with the highest burnup within the fuel assembly should be specified in terms of peak rod average burnup. For assemblies with mixed oxide (MOX) or thoria rods, the units will usually be megawatt days per metric ton heavy metal (MWd/MTHM).

Can for damaged fuel. A metal enclosure that is sized to confine damaged spent fuel contents. A can for damaged fuel must satisfy fuel-specific and system-related functions for undamaged SNF required by the applicable regulations.

Carrier. See 10 CFR 71.4.

Certificate holder. See 10 CFR 71.4.

Certificate of compliance. See 10 CFR 71.4.

Close reflection by water. See 10 CFR 71.4.

Closed transport vehicle. A transport vehicle or conveyance equipped with a securely attached exterior enclosure that during normal transportation restricts the access of unauthorized persons to

the cargo space containing the Class 7 (radioactive) materials. The enclosure may be either temporary or permanent, and in the case of packaged materials may be of the "see-through" type, and must limit access from the top, sides, and bottom. (49 CFR 173.403)

Confirmatory calculations. The NRC reviewer performed independent calculations to confirm the adequacy of the applicant's analyses. These calculations do not replace, nor do they endorse, the applicant's design calculations.

Consignment. See 10 CFR 71.4.

Containment system. See 10 CFR 71.4.

Contamination. See 10 CFR 71.4.

Conveyance. See 10 CFR 71.4.

Criticality Safety Index (CSI). See 10 CFR 71.4

Curie (Ci). A unit of radioactive decay. A curie is equal to 37 billion (3.7×10^{10}) disintegrations per second. The SI unit Becquerel (Bq) is equal to 1 disintegration per second.

Damaged spent nuclear fuel. Any spent fuel rod or spent fuel assembly that cannot meet the pertinent fuel-specific or system-related functions.

Exclusive use. See 10 CFR 71.4.

Fissile material. See 10 CFR 71.4.

Fissile material package. Fissile material packaging, together with its fissile material contents.

Gross Breach. A breach in the spent fuel cladding that is larger than either a pinhole leak or a hairline crack and allows the release of particulate matter from the spent fuel rod.

High Burnup Fuel. SNF with assembly-average burnup (see "Burnup") exceeding 45 GWd/MTU.

Intact spent nuclear fuel. Any fuel that can fulfill all fuel-specific and system-related functions, and that is not breached. Note that all intact SNF is undamaged, but not all undamaged fuel is intact, since under most situations, breached spent fuel rods that are not grossly breached will be considered undamaged.

k_{eff} "k-effective". Effective neutron multiplication factor including all biases and uncertainties at a 95-percent confidence level for indicating the level of subcriticality relative to the critical state. At the critical state, k_{eff} = 1.0. This has also been used to represent effective thermal conductivity.

Low Burnup Fuel. SNF with an assembly-average burnup (see "Burnup") less than 45 GWd/MTU.

Low specific activity material. See 10 CFR 71.4.

Low toxicity alpha emitters. See 10 CFR 71.4.

Maximum normal operating pressure (MNOP). See 10 CFR 71.4.

Natural thorium. See 10 CFR 71.4.

Natural uranium. Uranium with the naturally occurring distribution of uranium isotopes (approximately 0.711 weight percent uranium-235, and the remainder by weight essentially uranium-238).

Normal form radioactive material. See 10 CFR 71.4.

Optimum interspersed hydrogenous moderation. See 10 CFR 71.4.

Package. See 10 CFR 71.4.

Package Application (Safety Analysis Report). In the context of Part 71, the Safety Analysis Report (SAR) is sometimes called the package application. Information provided in the package application report that is not incorporated into the certificate of compliance is not typically considered a condition of the approval. The package application simply provides the information that demonstrates that the design meets the performance standards in the regulations. The package application is typically listed as a "reference" at the end of the certificate, not as a condition. To use a package under the General License in Subpart C of 10 CFR Part 71, the licensee is required to have a copy of the packaging drawings and other documents, referenced in the Certificate, that relate to the use and maintenance of the package, and actions to be taken before shipment. The licensee must follow the terms and conditions in the certificate (i.e., the shipment must conform, in all respects, to the certificate and any documents specifically cited as a condition of the approval). The licensee does not need to have a copy of the complete package application.

Packaging. See 10 CFR 71.4.

Pinhole leaks (or hairline cracks). A minor cladding defect that will not permit significant release of particulate matter from the spent fuel rod and therefore presents a minimal as low-as-is-reasonably-achievable concern for loading and unloading operations.

Radiation level. The radiation dose-equivalent rate expressed in millisievert(s) per hour (mSv/h) or millirem(s) per hour (mrem/h). Neutron flux densities may be converted into radiation levels according to Table 1, 49 CFR 173.403.

Radioactive contents. A Class 7 (radioactive) material, together with any contaminated liquids or gases within the package. (49 CFR 173.403)

Radioactive material. Any material containing radionuclides where both the activity concentration and the total activity in the consignment exceed the values specified in the table in 49 CFR 173.436 or values derived according to the instructions in 49 CFR 173.433 (49 CFR 173.403).

Safety Evaluation Report (SER). In the context of this SRP, the report NRC staff prepared by to document the acceptability of the applicant's application and other submissions. The SER also identifies the NRC staff's conclusions and the conditions of approval that are included in the NRC approval (certificate of compliance or letter authorization) that the SER accompanies.

Special form radioactive material. See 10 CFR 71.4

Specific activity of a radionuclide. See 10 CFR 71.4

Spent nuclear fuel or spent fuel (SNF). See 10 CFR 71.4

Surface contaminated object (SCO). See 10 CFR 71.4.

Transport index. See 10 CFR 71.4.

Type A quantity. See 10 CFR 71.4.

Type B quantity. See 10 CFR 71.4.

Undamaged spent nuclear fuel. Any fuel rod or fuel assembly that can meet the pertinent fuel-specific or package-related functions necessary to meet 10 CFR Part 71. Undamaged SNF rods may contain pinholes or hairline cracks, but may not contain gross breaches. Undamaged SNF assemblies may have assembly defects if able to meet the pertinent fuel-specific or package-related functions.

APPENDIX A DESCRIPTION, SAFETY FEATURES, AND AREAS OF REVIEW FOR DIFFERENT TYPES OF RADIOACTIVE MATERIAL TRANSPORTATION PACKAGES

A.1 Radiography Packages

A.1.1 Purpose of Package

These packages include radiographic-exposure devices or radiographic-source changers. The purpose of an exposure device is to transport a Type B quantity of special form radioactive material for use as a radiographic gamma source. The purpose of the source-changer device is to transport a radiographic gamma source to and from an exposure device and to exchange radiographic sources with that exposure device.

A.1.2 Description of a Typical Package

A typical packaging used as an exposure device consists of a lead or depleted-uranium shield inside a welded steel or titanium housing. The shield includes a metallic S-shaped tube that houses the source during transport and allows movement of the source into position for radiography. The shield may be fixed in position by retention cups welded to end plates of the housing and by foam between the shield and the housing.

The source is attached to the end of a short metallic cable, or pigtail. A securing lock mechanism is installed at one end of the housing to maintain the source in a fixed position during transport. A safety plug assembly installed at the other end of the S-tube provides a redundant mechanism to prevent movement of the source toward an outlet.

The content of a package used as an exposure device is one radiographic gamma source (e.g., cobalt-60, iridium-192, or selenium-75) in Type B special form.

The package is typically hand-carried by one person using a handle attached to the housing, although some larger radiography cameras that use cobalt-60 are either carried by more than one individual or mounted on wheels.

A typical packaging used as a radiographic source changer is similar to that used as an exposure device. A source changer may contain multiple sources, typically housed in U-shaped tubes. In addition to its function as a transportation package, a source changer is used to move sources either from or to an exposure device. Although the remainder of this appendix specifically addresses exposure devices, the review of a source changer is similar.

A sketch of a typical radiographic exposure device is presented in Figure A.1-1.

A.1.3 Package Safety

Safety Functions

The principal safety function of these packages is to retain the radiographic source and to provide gamma shielding. Containment is provided primarily by the special form source itself. These packages do not contain fissile material.

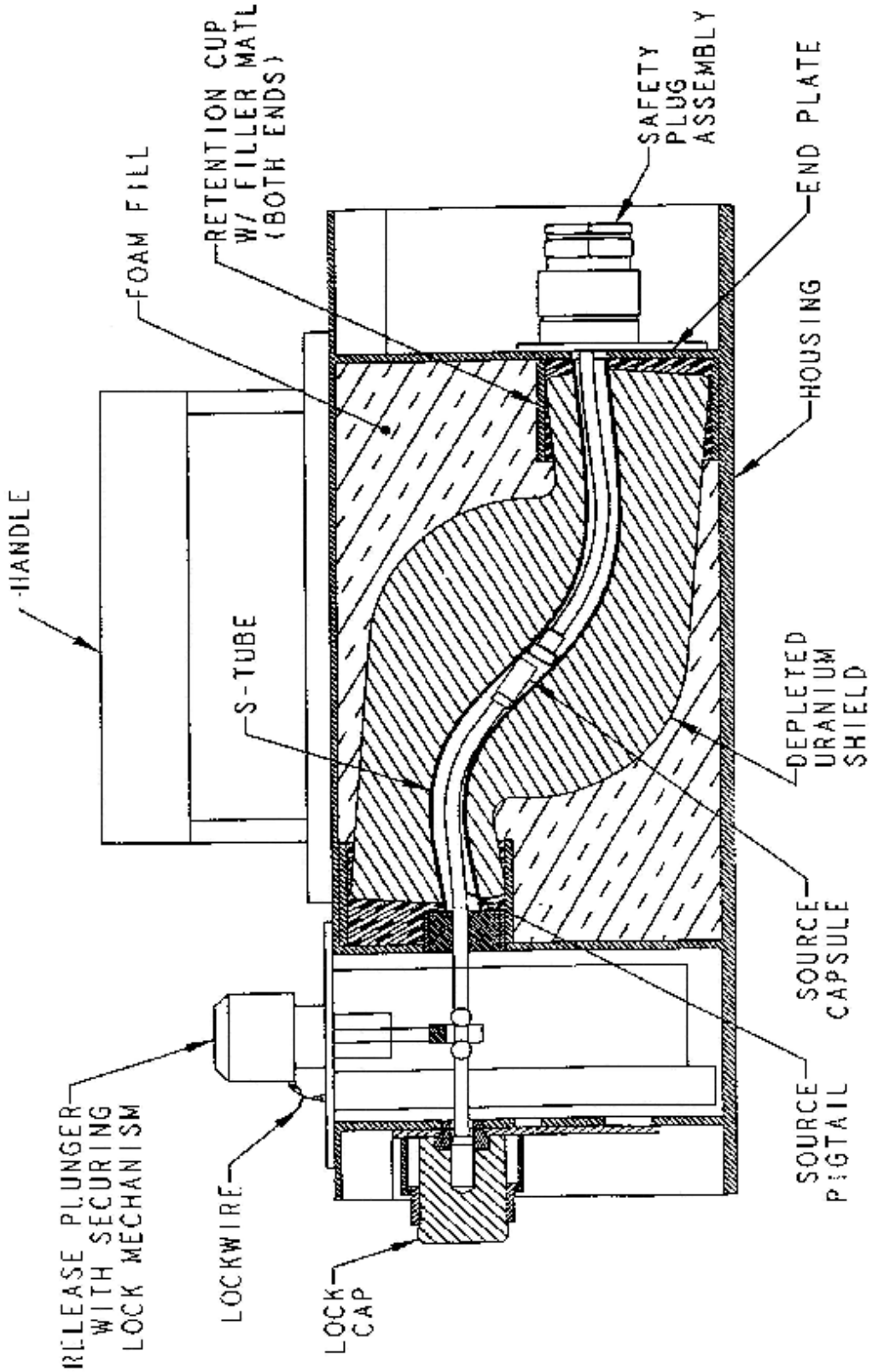

Figure A.1-1 Sketch of a typical radiographic exposure device
Safety Features

- A lead- or depleted-uranium shield, including supplemental shielding, provides gamma shielding.

- A securing lock mechanism positions the source pigtail within the S-tube in the shield during transport to prevent high radiation fields and radiation streaming.

- A safety plug assembly at the opposite end of the tube provides a redundant mechanism to prevent movement of the source.

- The housing, foam, and other structural materials protect the shield and S-tube from damage.

A.1.4 Typical Areas of Review for Package Drawings

- housing features, including dimensions, material, thickness, and welds

- foam material and density

- shield dimensions (including tolerances as appropriate) and material, including supplemental shielding, its maximum weight, dimensions, and method of attachment: Other than the material, total maximum weight, and maximum thickness that may be applied to the primary shield, the specific details of the supplemental shielding are not needed, because it is intended for the maximum strength source to meet the normal conditions dose-rate limit. The drawings should show a general arrangement for using supplemental shielding, if needed to meet normal condition radiation level limits.

- material, wall thickness, and curvature of S- or U-tube

- lock mechanism specifications

- other structural features, including bolts, pins, and retention cups, as applicable

A.1.5 Typical Areas of Safety Review

- The general information review verifies that the contents are restricted to special form and that the source nuclide and maximum allowable activity are specified. Specification of content activity may be expressed as “Bq (output)” [becquerels (output)] or “Ci (output)” [curies (output)] for iridium-192 to denote that the activity is determined from a measurement of the rate of decay or a measurement of the radiation level at a prescribed distance from the source, an example of which is described in Note 1 of American National Standards Institute (ANSI) N432-1980. For all other nuclides, the content activity should be expressed as “Bq” or “Ci.”

- The structural and thermal reviews evaluate the ability of the shield to perform its intended function under normal conditions of transport and hypothetical accident conditions. These reviews address the following:

— damage to the shielding

— misalignment of the S-tube

— damage to the S-tube resulting in exposure of the depleted uranium shield and possible oxidation of the uranium or eutectic reaction between the uranium and other package components

— damage to the securing lock mechanism

— movement of the source relative to the shielding

- The shielding review evaluates the ability of the package to satisfy the maximum allowable external radiation levels under normal conditions of transport and hypothetical accident conditions. Shielding requirements are often demonstrated by measuring the dose rates from a gamma test source that is the same source as the package contents in a prototype package that has undergone the normal conditions of transport and the hypothetical accident conditions tests for the respective radiation level limits. The results of measurement are scaled according to the ratio of the maximum allowed activity of the contents to the activity of the test source. The application includes the results of these measurements and the radiation levels scaled to the package's maximum allowed contents activity. Key issues include the following:

  — ensuring that the locations of the maximum radiation levels on the surface of the package, including near the ends of the S-shaped source tube, and at 1 meter (m) from the surface have been identified

  — determining that the size (active depth and diameter) of the detector is appropriate for providing dose-rate measurements at the regulatory locations (because of the small size of the package, corrections may be needed to account for the size of the detector probe volume) (see ANSI/Health Physics Society (HPS) N43.9-2015 for information about shield-efficiency testing and the International Atomic Energy Agency's (IAEA's) SSG-26, Paragraph 233.5 and Table 1, for information about detector size and measurement-correction factors)

  — examining the design of the source assembly and securing lock mechanism, including pigtail and locking balls (a small movement in source position can result in a significant increase in external radiation levels)

  — verifying that no significant increase in radiation occurs as a result of the tests for normal conditions of transport

  — confirming that the radiation levels under normal conditions of transport and hypothetical accident conditions are satisfied (for the hypothetical accident conditions, the package should meet the radiation-level limits without any supplemental shielding)

- The review of operating procedures confirms that the source is securely locked in position before shipment. This review also evaluates procedures to verify by physical means that the source has been removed before shipment of an "empty" package. Because of shielding effectiveness and radiation from uranium shielding itself,

verification by radiation measurements alone may not be sufficient. The procedure should be capable of detecting remaining sources if the pigtail is clipped off.

- The review of the acceptance tests and the maintenance program verifies that appropriate fabrication and periodic verification tests are performed to demonstrate effectiveness of the shielding. The review also verifies that appropriate inspections are performed to monitor any wearing of the S-tube.

Several U.S. Nuclear Regulatory Commission (NRC) information notices (INs) (IN-85-07, IN-87-47, IN-88-18, IN-88-33, IN-90-24, IN-90-35, IN-90-82, IN-91-35, IN-92-72, and IN-97-86) provide additional detail on safety issues relevant to the transport of radiography packages.

A.1.6 References

Health Physics Society, "Gamma Radiography—Specifications for the Design, Testing, and Performance Requirements for Industrial Gamma Radiography System Equipment Using Radiation Emitted by a Sealed Radioactive Source," ANSI/HPS N43.9-2015, McLean, VA.

International Atomic Energy Agency, "Advisory Material for the IAEA Regulations for the Safe Transport of Radioactive Material (2012 Edition)," Specific Safety Guide No. SSG-26 (STI/PUB/1586), June 2014, Vienna.

National Bureau of Standards, "American National Standard N432; Radiological Safety for the Design and Construction of Apparatus for Gamma Radiography," ANSI N432-1980, Washington, DC, August 15, 1980.

U.S. Nuclear Regulatory Commission, "Contaminated Radiography Source Shipments," Office of Inspection and Enforcement Information Notice 85-07, January 29, 1985.

U.S. Nuclear Regulatory Commission, "Transportation of Radiography Devices," Office of Nuclear Material Safety and Safeguards (NMSS) Information Notice 87-47, October 5, 1987.

U.S. Nuclear Regulatory Commission, "Malfunction of Lockbox on Radiography Device," NMSS Information Notice 88-18, April 25, 1988.

U.S. Nuclear Regulatory Commission, "Recent Problems Involving the Model SPEC 2-T Radiographic Exposure Device," NMSS Information Notice 88-33, May 27, 1988.

U.S. Nuclear Regulatory Commission, "Transportation of Model SPEC 2-T Radiographic Exposure Device," NMSS Information Notice 90-24, April 10, 1990.

U.S. Nuclear Regulatory Commission, "Transportation of Type A Quantities of Non-Fissile Radioactive Materials," NMSS Information Notice 90-35, May 24, 1990.

U.S. Nuclear Regulatory Commission, "Requirements for Use of Nuclear Regulatory Commission- (NRC-) Approved Transport Packages for Shipment of Type A Quantities of Radioactive Material," NMSS Information Notice 90-82, December 31, 1990.

U.S. Nuclear Regulatory Commission, "Labeling Requirements for Transporting Multi-Hazard Radioactive Materials," NMSS Information Notice 91-35, June 7, 1991.

U.S. Nuclear Regulatory Commission, “Employee Training and Shipper Registration Requirements for Transporting Radioactive Materials,” NMSS Information Notice 92-72, October 28, 1992.

U.S. Nuclear Regulatory Commission, “Additional Controls for Transport of the Amersham Model No. 660 Series Radiographic Exposure Devices,” NMSS Information Notice 97-86, December 12, 1997.

A.2 Type B Waste Packages

A.2.1 Purpose of Package

The purpose of this type of package is to transport a Type B quantity of dewatered or dry, radioactive, irradiated, and contaminated solid materials.

A.2.2 Description of a Typical Package

A typical packaging consists of a steel-encased, lead-shielded cylinder with impact limiters attached at both ends. The packaging may be protected by a thermal shield, consisting of a thin metal shell separated from the lead-filled cylinder by a wire wrap. Closure is provided by a bolted steel lid, which may also include lead shielding. Two concentric O-rings are installed in grooves typically on the underside of the lid. The lid includes a leak-test port between the O-rings and sometimes a vent port. The bottom of the packaging contains a sealed drain port.

A typical packaging may be sized to transport ion-exchange resins, process solids, or irradiated hardware, such as control-rod blades. It is approximately 3.3 m [about 11 feet] in length and 1.3 m [about 4 feet] in diameter (without impact limiters) and can weigh as much as 35 tons (without contents). The packaging generally has two or four trunnions near the top for lifting, and two near the bottom for rotation.

The contents of the package consist of a Type B quantity of dry, radioactive, irradiated, and contaminated solid materials, generally within a secondary container. The maximum content weight may approach 5 tons, including shoring. The radioactive contents typically include waste-containing mixed-fission products and activation products. The fissile material content of these packages is limited to that permitted by the general license provisions in Title 10 of the *Code of Federal Regulations* (10 CFR) Part 71, “Packaging and Transportation of Radioactive Material,” for fissile material packages (10 CFR 71.22, “General License: Fissile Material”), or fissile exempt quantities (10 CFR 71.15, “Exemption from Classification as Fissile Material”).

A sketch of a typical Type B waste package is presented in Figure A.2-1.

A.2.3 Package Safety

Safety Functions

The principal safety function of the package is to provide gamma shielding and containment.

Safety Features

- The lead shield provides gamma shielding. The neutron source is not typically significant.

- The inner vessel provides containment of the radioactive material. Although secondary containers are often used, they do not provide a containment function.

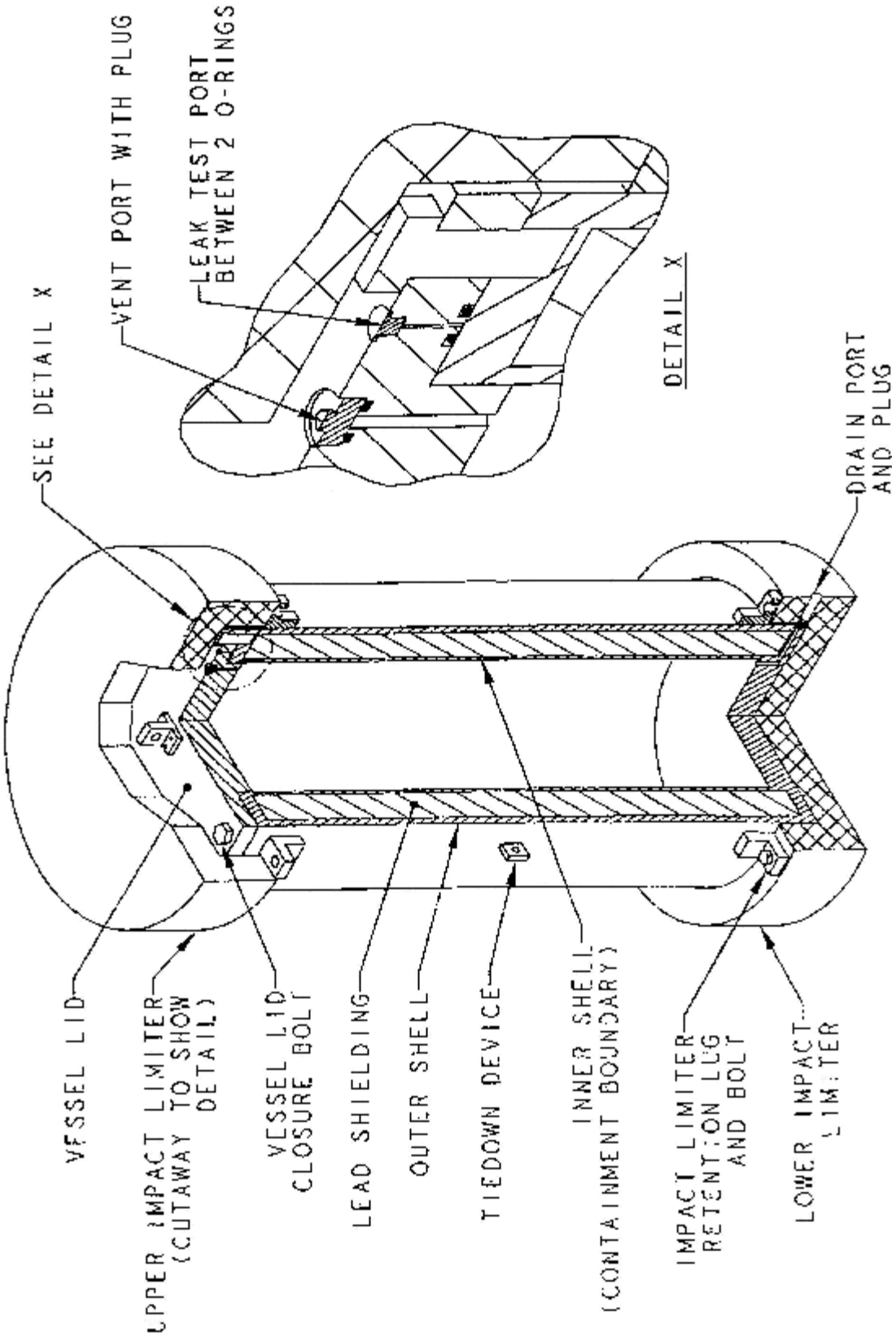

Figure A.2-1 Sketch of a typical Type B waste package

A.2.4 Typical Areas of Review for Package Drawings

- containment vessel body

  — materials of construction
  — dimensions and tolerances of structural shell and shielding material
  — fabrication codes or standards
  — weld specifications, including codes or standards for nondestructive examination
  — thermal shield, if applicable

- containment vessel closures

  — lid materials and their dimensions and tolerances
  — bolt specifications, including number, size, minimum thread engagement, and torque
  — seal material, size, and compression specifications
  — seal groove dimensions
  — vent, drain, and leak-test ports, including closure methods

- impact limiters

  — materials of construction and dimensions
  — foam or wood specifications, including density
  — method of attachment

A.2.5 Typical Areas of Safety Review

- The general information review identifies the allowable contents, including water and other materials that could produce combustible gases.

- The structural and thermal reviews evaluate the performance of the containment system during both normal conditions of transport and hypothetical accident conditions. Primary emphasis is on the structural and thermal effects at the closure regions (lid and ports), including O-rings, plugs, and bolts.

- The structural and thermal reviews also verify the effects of the hypothetical accident conditions tests on the lead shielding and thermal shield (if applicable).

- The thermal review confirms the maximum temperature and pressure in the containment vessel under normal conditions of transport and hypothetical accident conditions.

- The containment review verifies that the package closures (lid, vent port, drain port) meet 10 CFR Part 71 containment criteria using the methods in ANSI N14.5 for both normal conditions of transport and hypothetical accident conditions. A typical maximum allowable leakage rate is approximately 10^{-5} ref cubic centimeters per second. The review also confirms that combustible-gas generation meets the criteria discussed in Chapter 4 of this standard review plan (SRP).

- The shielding review confirms that the package meets the allowable radiation levels during both normal conditions of transport and hypothetical accident conditions. The review should also confirm that the lead shielding does not melt under the hypothetical

accident conditions and that any lead slump is appropriately accounted for in the hypothetical accident conditions analysis. Key issues include the following:

— Ensure the application includes an appropriate description of the package contents for defining the radiation source and the source's geometry, including location and distribution, within the package, and self-shielding properties and that the shielding analysis is appropriately bounding for the contents description. Contents specifications may include specific nuclides with maximum activities or maximum specific activities or bounding spectra definitions (i.e., maximum emission or specific emission rates for specific energy ranges) for relevant radiation types the contents emitted.

— Ensure the analysis addresses potential or allowable shifting, settling, or redistribution of radioactive materials or nuclides within the waste contents under normal conditions of transport and hypothetical accident conditions.

— Ensure the analysis is consistent with and bounding for specifications regarding the use of shoring or dunnage with the contents. For cases where shoring is optional, analyses should neglect the shoring, positioning the contents in the package to maximize radiation levels.

- Regulatory Issue Summary 2013-04, "Content Specification and Shielding Evaluations for Type B Transportation Packages," dated April 23, 2013, provides additional useful information regarding content specifications and shielding analyses. Ensure the conditions of the certificate of compliance, including any unique operations descriptions regarding content loading, assure that the shielding analysis will be consistent with or bounding for the allowable contents, including the content configurations.

- Typically, but not always, the criticality review verifies that the package contains no fissile material, an exempt quantity of fissile material, or a fissile material quantity allowed under the general license provisions of 10 CFR Part 71. For packages with fissile content limited to quantities authorized by general license, the review also should confirm that the correct criticality transport index is specified. If the package authorizes fissile material greater than the fissile general license, then a criticality evaluation will be performed.

- The review of operating procedures verifies that the bolts are properly torqued and that all penetrations of the containment vessel are properly leak-tested prior to shipment. The review also addresses procedures that assure the contents are properly dewatered or dry. If not dry, the Containment section of the application should specify the maximum amount of water authorized in the package and evaluate the hydrogen gas generation. The operating procedures for drying should be consistent with the containment evaluation.

- The review of the acceptance tests and the maintenance program confirms that the appropriate leakage tests are performed for fabrication, maintenance, and periodic verification during the service life of the package. The review also ensures that appropriate acceptance testing of the lead shield and thermal performance is described and that the thermal performance of the packaging is maintained during the service life.

Two NRC information notices (IN-96-63 and IN-97-47) provide additional detail on safety issues relevant to the transport of Type B packages.

A.2.6 References

American National Standards Institute, “Radioactive Materials—Leakage Tests on Packages for Shipment,” ANSI N14.5-2014, New York.

U.S. Nuclear Regulatory Commission, “Potential Safety Issue Regarding the Shipment of Fissile Material,” NMSS Information Notice 96-63, December 5, 1996.

U.S. Nuclear Regulatory Commission, “Inadequate Puncture Tests for Type B Packages Under 10 CFR 71.73(c)(3),” NMSS Information Notice 97-47, June 27, 1997.

U.S. Nuclear Regulatory Commission, “Content Specification and Shielding Evaluations for Type B Transportation Packages,” Regulatory Issue Summary 2013-04, April 23, 2013.

A.3 Unirradiated Fuel Packages

A.3.1 Purpose of Package

The purpose of this type of package is to transport commercial unirradiated fuel assemblies and individual fuel rods. These packages are also referred to as “fresh fuel packages.”

This appendix addresses only those packages in which the contents are limited to a Type A quantity of fissile material. For entire assemblies, this is typically achieved by restricting the enrichment to less than 20 weight percent. For individual fuel rods, a combination of enrichment and mass limits may be specified. Type AF packages must meet the requirements in 10 CFR 71.43(f).

Transportation packages that contain recycled uranium may be Type B packages; therefore, containment and shielding evaluations may be required. See Chapters 4 and 5 of this SRP, and Section A.10 below for additional guidance.

A.3.2 Description of a Typical Package

A typical packaging consists of a metal outer shell, closed with bolts and a weather-tight gasket. An internal steel strongback, shock-mounted to the outer shell, supports one or two fuel assemblies, which are fixed in position on the strongback by clamps, separator blocks, and end support plates. Depending on the type of fuel, neutron poisons are sometimes used to reduce reactivity. If the package is used to transport individual fuel rods, a separate inner container is often employed.

The contents of the package are unirradiated uranium in fuel assemblies or individual fuel rods. Because the majority of these packages are for commercial reactor fuel, the uranium is typically in the form of Zircaloy-clad uranium dioxide pellets.

Sketches of the typical package described above are presented in Figures A.3-1 and A.3-2.

A.3.3 Alternative Package Design

An alternative design for a fresh fuel package is shown in Figure A.3-3. In this design, the fuel assemblies are fixed in position by two steel channels, mounted by angle irons or a similar bracing structure to a thin-walled inner metal container. This inner container is in turn surrounded by a honeycomb material and enclosed in a wooden outer container. Foam cushioning material is also generally used to cushion the fuel assemblies and may be used between the inner and outer container.

A.3.4 Package Safety

Safety Functions

The principal function of the package is to provide criticality control. The metal outer shell of the packaging retains the assemblies within a fixed geometry relative to other such packages in an array and provides impact and thermal protection. Shielding requirements are not significant because of the low radioactivity of unirradiated fuel.

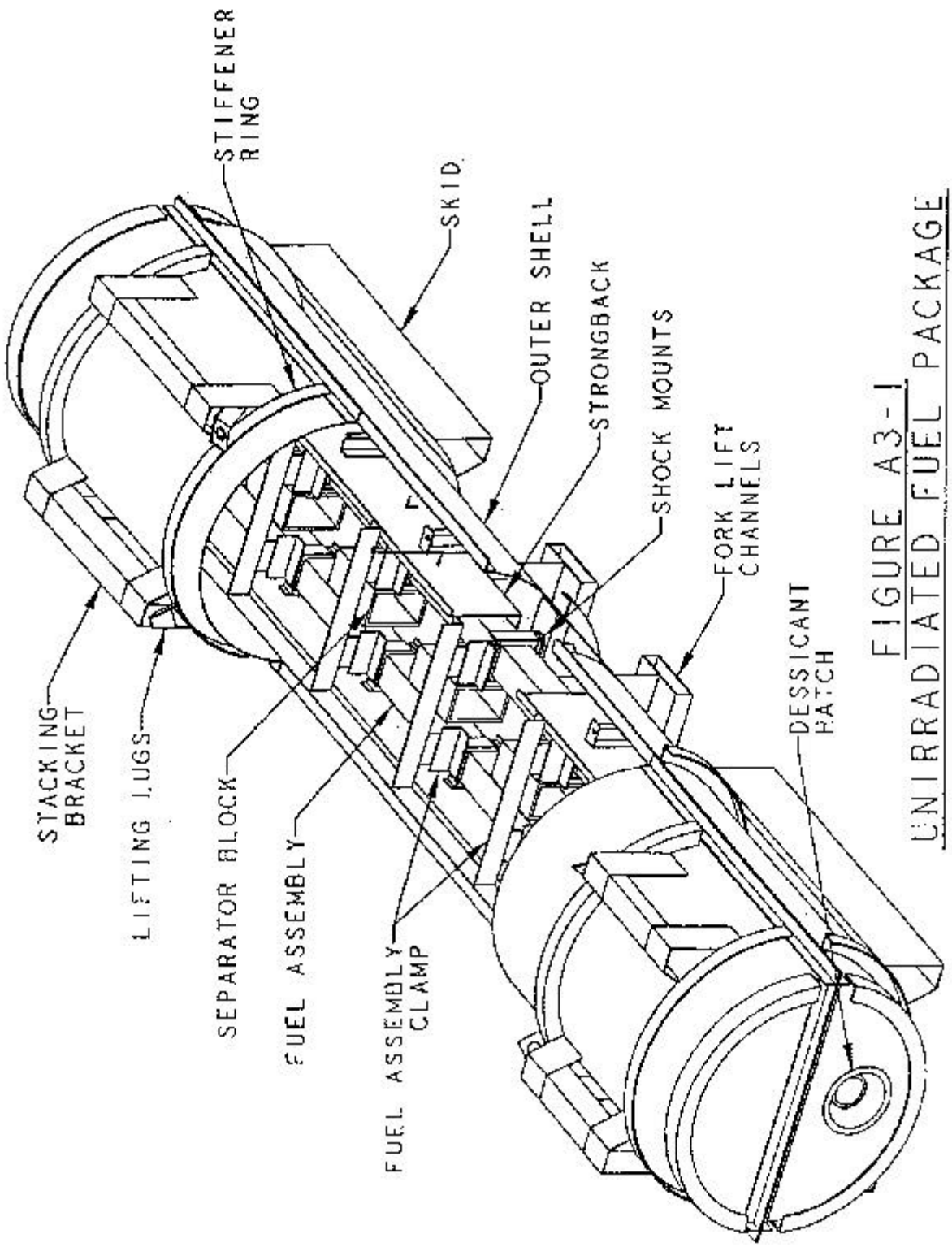

Figure A.3-1 Sketch of a typical unirradiated fuel package

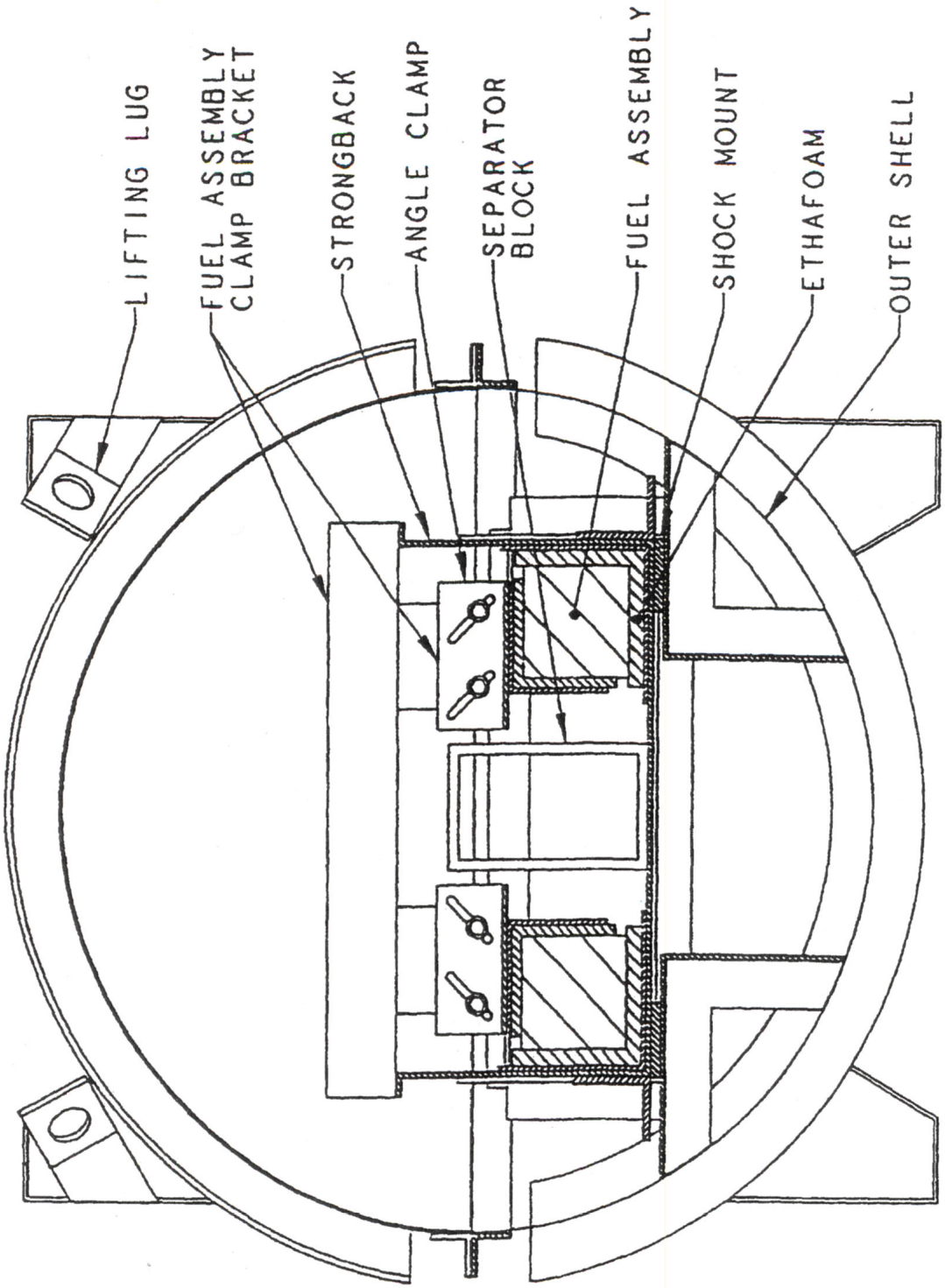

Figure A.3-2 Typical unirradiated fuel package cross section with fuel assemblies

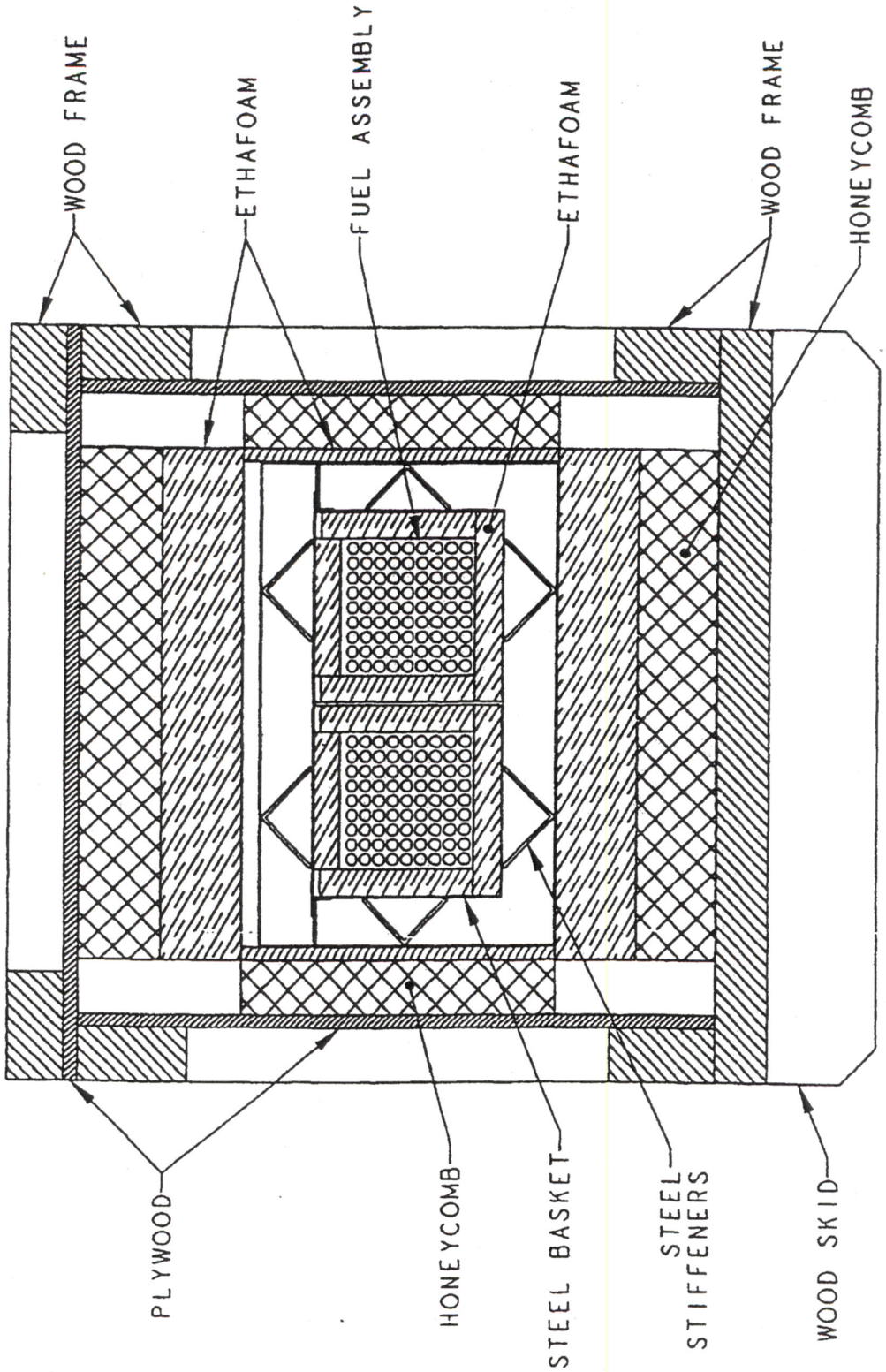

Figure A.3-3 Sketch of an alternative unirradiated fuel package
Safety Features

- A strongback with end support plates, clamps, and separators maintains the fuel assemblies in a fixed position relative to each other and to any neutron poisons.

- The metal outer shell of the packaging retains and protects the fuel assemblies and may provide a minimum spacing between assemblies in an array of packages.

- Neutron poisons, if present, reduce reactivity.

A.3.5 Typical Areas of Review for Package Drawings

- outer shell dimensions

- structural components (e.g., strongback, support plates, fuel clamps, separators) that fix the position of fuel assemblies or relative position between fuel assemblies and poisons

  — dimensions and materials
  — methods of attachment

- neutron poisons

  — dimensions and tolerances
  — minimum poison content
  — location and method of attachment

- moderating materials, including plastics, wood, and foam

  — location
  — material properties

Drawings should include reasonably lenient dimensional tolerances for the packaging components to allow practical fabrication variability. For example, the outer length of the container may vary without affecting the package's performance. Dimensions that are important with respect to criticality safety should be strictly limited. For example, the separation distance provided by certain structural features (e.g., clamps, spacers) may be important for criticality safety, and those features should be identified with close tolerances.

A.3.6 Typical Areas of Safety Review

- The general information review identifies the fuel assembly designs authorized in the package, including the following:

  — number of and arrangement of fuel assemblies

  — number, pitch, dimensions (with tolerances), and position of fuel rods, guide tubes, water rods, and channels

  — material specifications of the cladding, guide tubes, water rods, and channels

  — overall assembly dimensions, including active fuel length

  — authorization or restrictions on missing fuel rods or partial-length rods

— maximum enrichment

— pellet dimensions and tolerances

— minimum cladding thickness

— fuel-clad gap

— type, location, and concentration of burnable poisons

— type, location, and quantity of plastics, such as polyethylene, within or surrounding the fuel assemblies

- The structural review addresses possible damage to the outer shell, strongback, fuel assembly, neutron poisons (if present), clamps, separators, and end support plates to ensure that the fuel assemblies and neutron poisons are maintained in a fixed position relative to each other under hypothetical accident conditions.

- The structural and thermal reviews also confirm the minimum spacing between fuel assemblies in different packages in an array under hypothetical accident conditions. Spacing can be affected by separation of the strongback from its shock mounts, failure of the shock mounts or fuel assembly clamps, and deformation of the outer shell of the package. Damage to the outer shell and charring of any thermal insulating/impact absorbing material (if present) may result in closer spacing than that of normal conditions of transport.

- The thermal review evaluates the effect of the fire on neutron poisons, plastic sheeting, wood, or other temperature-sensitive materials under hypothetical accident conditions.

- The criticality review addresses both normal conditions of transport and hypothetical accident conditions. Key areas for this review include the following:

  — The number of packages in the array and the array configuration (pitch, orientation of packages, etc.): Because of movement of the strongback within the package and the location of poisons, the arrays might not be symmetrical.

  — Degree of moderation: Structural features, as well as packaging material such as plastic sheeting, are evaluated for the possibility of preferential flooding within the package. Plastic sheeting on the fuel assemblies should be open at both ends to preclude preferential flooding. Flooding between the fuel pellets and cladding is also considered. Variations in the allowable amount of lightweight packaging material and plastic shims inserted in the fuel assemblies can also affect criticality under normal conditions of transport.

- The review of operating procedures ensures that instructions are provided so that proper clamps, separators, and poisons are selected for the type of fuel assemblies to be shipped and that these items are properly installed prior to shipment. The procedures should also address any other restrictions (e.g., limits on number of shims and plastic wrappers to limit total polyethylene content) considered in the package evaluation.

- The review of the acceptance tests and the maintenance program verifies that the neutron poisons, if present, are subject to appropriate tests to verify the necessary characteristics, including minimum concentration and uniformity.

A.4 Low-Enriched Uranium Oxide Packages

A.4.1 Purpose of Package

The purpose of this type of package is to transport pellets and powder of low-enriched uranium (LEU) oxide. These packages are also referred to as “low-enriched pellet and powder packages” or “oxide packages.”

This appendix addresses only those packages in which the contents are limited to a Type A quantity of fissile material. This is achieved by limiting either the maximum enrichment or a combination of enrichment and mass.

A.4.2 Description of a Typical Package

A typical packaging consists of an inner steel vessel positioned within an outer steel drum. The outer drum is typically a 30- or 55-gallon drum with a removable head and weather-tight gasket. The head is usually secured by a clamp ring with a closure bolt and a tamperproof seal. Vent holes near the top of the drum, which provide pressure relief under hypothetical accident conditions, are capped or taped during normal conditions of transport to prevent water inleakage.

The inner vessel is typically flanged, with a gasket and a bolted lid. The inner vessel is the containment vessel. It is centered in position inside the outer drum by foam, fiberboard, or similar insulation material. The inner vessel is not a pressure vessel and is not designed to prevent water inleakage under hypothetical accident conditions.

The contents of this package include LEU pellets, powder, and sometimes scrap, which are placed in plastic bags, metal cans, or cardboard boxes prior to loading into the inner container. Pellets are generally arranged on metal trays. Packages may include plates or liners with neutron poisons within the inner vessel. Spacers may be used within the inner vessel to maintain the position of the contents and to displace moderator in the event of water inleakage.

A sketch of a typical package for pellets or powder of LEU oxide is presented in Figure A.4-1.

A.4.3 Package Safety

Safety Functions

The principal function of the package is to provide criticality control. The inner vessel provides containment to satisfy the requirements for Type AF packages. Shielding requirements are not significant because of the low radioactivity of unirradiated uranium oxide. Type AF packages must meet the requirements of 10 CFR 71.43(f).

Safety Features

- The outer metal drum and insulation protect the inner vessel under hypothetical accident conditions and maintain a minimum spacing between the inner containers of different packagings.

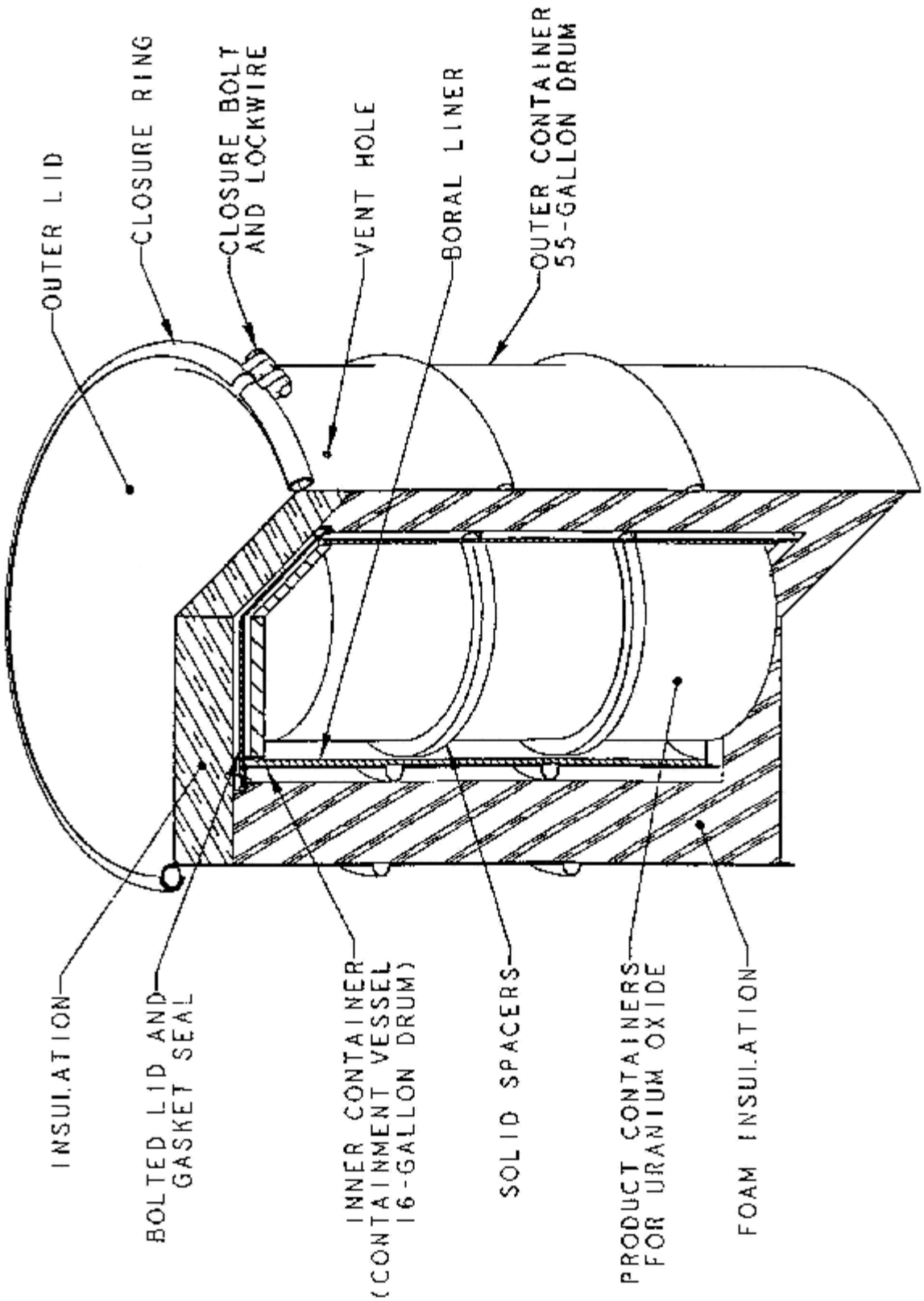

Figure A.4-1 Sketch of a typical package for pellets or powder of LEU oxide

- The inner vessel provides containment and maintains a fixed geometry for criticality control.

- Neutron poisons, if present, reduce reactivity.

A.4.4 Typical Areas of Review for Package Drawings

- inner vessel

  — materials of construction
  — dimensions and tolerances, including thickness
  — product containers
  — spacers, including materials and dimensions
  — fabrication codes or standards

- neutron poisons

  — isotopes and minimum concentration
  — dimensions and tolerances
  — location

- insulating material

  — type
  — dimensions and tolerances
  — density

- outer drum

  — material
  — closure, including use of heavy-duty clamp ring, bolt torque
  — dimensions

Drawings should show the outer drum in a general configuration, without precise details. For example, the drawings should show material of construction, which may be “steel” without specification, and relatively lenient tolerances on the drum dimensions. The general configuration of the rolling hoops may be shown, without identifying exact dimensions. Material and thicknesses should be shown for components such as the shell, bottom head, lid, closure ring, and bolt. The gasket, which typically does not serve a containment function, may be shown as an option or with minimum specificity. Dimensions that are important for criticality safety should be appropriately toleranced.

A.4.5 Typical Areas of Safety Review

- The structural review evaluates package integrity under drop, puncture, and thermal tests. This includes verifying that the lid of the outer drum remains in place and that the inner vessel is not damaged. NUREG/CR-6818 discusses potential issues related to steel drum closure lid design.

- The structural and thermal reviews address the minimum spacing between contents of different packages under hypothetical accident conditions. Damage to outer drum and

charring of the insulation may result in closer spacing and more reactivity than under normal conditions of transport.

- The thermal review also evaluates the effect of fire on neutron poisons and spacers.

- The criticality review addresses in detail both normal conditions of transport and hypothetical accident conditions. Key areas for this review include the following:

  — The configuration of the contents under normal conditions of transport and hypothetical accident conditions: This includes the number, spacing, size, and condition of pellets, the distribution of powders, and similar effects. Small changes in dimensions of the inner vessel can result in a significant increase in reactivity.

  — Distribution and degree of moderation: In addition to the moisture content of the pellets or powder, structural features, spacers, and packaging material such as plastic bags or cans are evaluated for the possibility of differential flooding within the package. Variations in the allowable amount of lightweight packaging material are also verified. Loading less than the maximum allowed contents can provide additional volume for water inleakage under hypothetical accident conditions; therefore, partial loads are often more reactive than a fully packed inner vessel.

  — The number of packages considered in the array and the array configuration (e.g., pitch and orientation of packages): Depending on the positioning of contents and the location of poisons, the arrays might not be symmetrical.

  — The degree and location of damage (e.g., drying or charring) to the thermal insulation caused by the fire test.

- The review of operating procedures ensures that instructions are provided so that proper neutron poisons or spacers are selected for the type of contents to be shipped and that the package is properly closed.

- The review of the acceptance tests and the maintenance program verifies that the neutron poisons, if present, are subject to appropriate tests to verify their necessary characteristics, including minimum concentration and uniformity.

A.5 Transuranic Waste Packages

A.5.1 Purpose of Package

The purpose of this type of package is to transport a Type B quantity of contact-handled transuranic waste. For remote-handled transuranic waste, the review should consider the guidance provided for spent nuclear fuel content.

A.5.2 Description of a Typical Package

A typical packaging consists of a stainless-steel inner containment vessel housed inside a stainless-steel and polyurethane outer containment assembly.

The outer containment vessel is a right circular cylinder with a flat bottom and domed lid. Its body and dome generally consist of polyurethane foam sandwiched between an inner and outer stainless-steel shell. The dome-shaped lid is secured to the body by a locking ring. An elastomeric O-ring is used as the containment seal; a second O-ring allows the seal to be leak-tested. The assembly typically contains a leak-test port and a vent port. Fork pockets are often located at the base of the assembly for lifting and handling the entire package. Separate lifting devices are used for handling the lid only.

The inner containment vessel is a stainless-steel shell with domed ends. The closure system consists of two O-rings, a leak-test port, and a vent port, similar to the outer containment vessel. Lifting devices on the inner lid can be used for lifting either the lid itself or an empty inner containment vessel.

The contents of the package consist of contact-handled transuranic waste produced primarily from plutonium production operations. The waste may be packaged within secondary containers. The contents may be limited to restrict the generation of hydrogen or other combustible gases.

Several packages may be secured to a special trailer for transport.

A sketch of a typical transuranic waste package is presented in Figure A.5-1.

A.5.3 Package Safety

Safety Functions

The principal safety functions of the package are to provide containment and criticality control.

Safety Features

- While not required by regulation any longer, the inner and outer containment vessels may provide double containment for the plutonium.

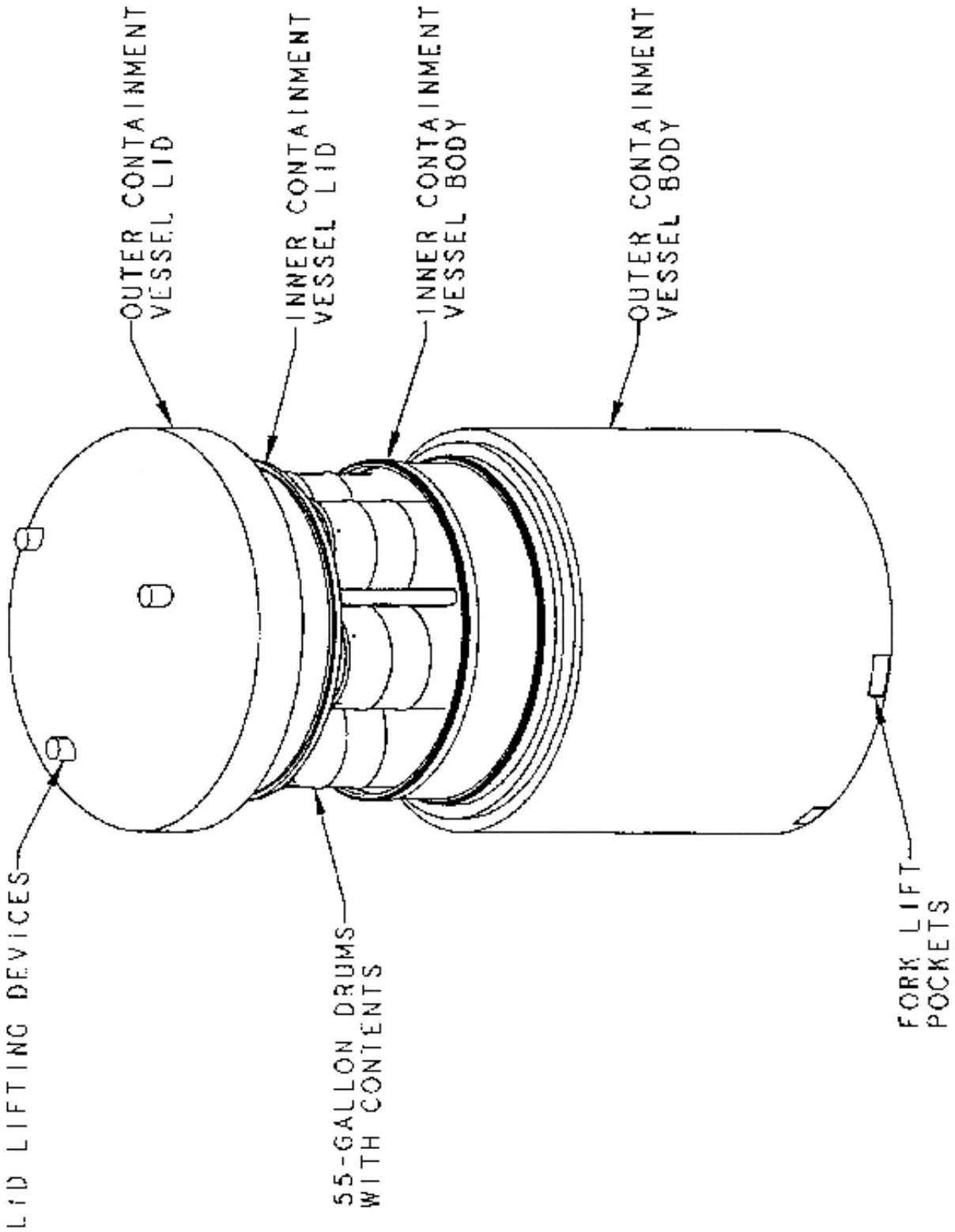

Figure A.5-1 Sketch of a typical transuranic waste package

- The steel package and configuration of the secondary containers provide sufficient attenuation and distance from the waste to satisfy the shielding requirements for normal conditions of transport (exclusive use) and hypothetical accident conditions.

- The limit on the allowed mass of fissile material provides criticality control for a single package. The physical size and separation of contents also ensures subcriticality for arrays.

A.5.4 Typical Areas of Review of Package Drawings

- containment vessels

  — materials of construction
  — dimensions and tolerances
  — fabrication codes or standards
  — weld specifications, including codes or standards for nondestructive examination
  — foam specification and density, as applicable

- containment vessel closures

  — lid materials and their dimensions and tolerances
  — closure device design details, such as bolt specifications and torque
  — seal material, size, and compression specifications
  — seal groove dimensions
  — vent and leak-test ports, including closure methods

A.5.5 Typical Areas of Safety Review

- The structural and thermal reviews evaluate the ability of the containment vessels to perform their intended functions under normal conditions of transport and hypothetical accident conditions. Primary emphasis is on the structural effects near the O-ring regions (including closure devices) and on the thermal performance of the O-rings.

- The thermal and containment reviews verify that the combustible gas concentration in any confined volume will not exceed 5 percent (by volume), or lower if warranted by the combustible gas, during a period of 1 year. Shorter time periods have been approved based on detailed operating procedures to control and track the shipment of packages; this would be documented as a CoC condition. The reviews also should ensure that the containment evaluation specifies that the secondary containers are aspirated (e.g., vacuum dried) prior to shipment.

- The containment review verifies that the 10 CFR Part 71 containment criteria are satisfied for both normal conditions of transport and hypothetical accident conditions. With typical contents, the package should remain leaktight, as defined in ANSI N14.5.

- The shielding review evaluates the ability of the package to satisfy the allowed radiation levels during normal conditions of transport and hypothetical accident conditions.

- The criticality review confirms that a single package and arrays of packages are subcritical during both normal conditions of transport and hypothetical accident conditions.

- The review of operating procedures verifies that if the package is loaded under water, any freestanding water is removed from both containment vessels, and that they are

closed and leak-tested prior to shipment. The review also typically ensures that the secondary containers are aspirated prior to shipment.

- Package operations should identify key leakage testing steps, setup configuration, and acceptance criteria. For example, key parameters for a pre-shipment leakage test (e.g., a pressure rise test) may be minimum test duration, maximum pressure drop allowed, and maximum temperature change allowed. These parameters may be justified by calculation of test sensitivity using guidance in ANSI N14.5.

- The review of the acceptance tests and the maintenance program verifies that appropriate fabrication, maintenance, and periodic verification leakage tests are performed.

A.5.6 References

American National Standards Institute, "Radioactive Materials—Leakage Tests on Packages for Shipment," ANSI N14.5-2014, New York.

A.6 Low-Enriched Uranium Hexafluoride Packages

A.6.1 Purpose of Package

The purpose of this type of package is to transport low-enriched solid uranium hexafluoride (UF_6).

A.6.2 Description of a Typical Package

A typical packaging consists of an inner steel cylinder that acts as a containment vessel, and an outer protective overpack. Unenriched UF_6 may be transported in bare cylinders, without the protective overpack, as authorized in U.S. Department of Transportation (DOT) regulations. Protective overpacks are typically required only for the transport of enriched (fissile) UF_6. ANSI N14.1, "Nuclear Materials—Uranium Hexafluoride—Packagings for Transport," specifies the design and fabrication of the UF_6 cylinder. ANSI N14.1 and USEC-651, "The UF_6 Manual: Good Handling Practices for Uranium Hexafluoride," contain information regarding overpacks. In 49 CFR 173.420(a)(2)(i), the DOT requires that the packagings must be "designed, fabricated, inspected, tested and marked in accordance with—(i) American National Standard N14.1 in effect at the time the packaging was manufactured."

The inner cylinder is carbon steel, with rounded ends and a protective skirt. On one end of the cylinder is a valve for filling and emptying the cylinder; on the other end is a removable plug. The most commonly used commercial cylinders are approximately 0.76 m [30 inches (in.)] in diameter, 2.1 m (81 in.) in length, with a capacity of about 2,300 kilograms (2.5 tons) of UF_6. The design and authorized contents are defined in ANSI N14.1.

The protective overpack is generally a double-shell, stainless-steel cylinder with cushioning pads on the inner cavity. An energy-absorbing, insulating foam fills the space between the inner and outer shell. The overpack can be separated into two halves to enable easy access to the inner cylinder. Overpacks for the 30-in. cylinders mentioned above are approximately 0.016 m (4 in.) thick.

For the 30-in. cylinder, the UF_6 enrichment should not exceed 5 percent. The cylinder is filled with liquid UF_6. Because of volume reduction during cooling and solidification of the UF_6, the final internal pressure is less than 1 atmosphere in the cylinder.

A sketch of a typical UF_6 package (cylinder and overpack) is presented in Figure A.6-1.

A.6.3 Package Safety

Safety Functions

The primary function of the package is to provide containment and moderation control for criticality purposes. Moderation control is required for all commercially used cylinders for fissile UF_6 and must be maintained under normal conditions of transport and hypothetical accident conditions. To assure subcriticality by moderation control, the mass of the contents must be at least 99.5 percent UF_6.

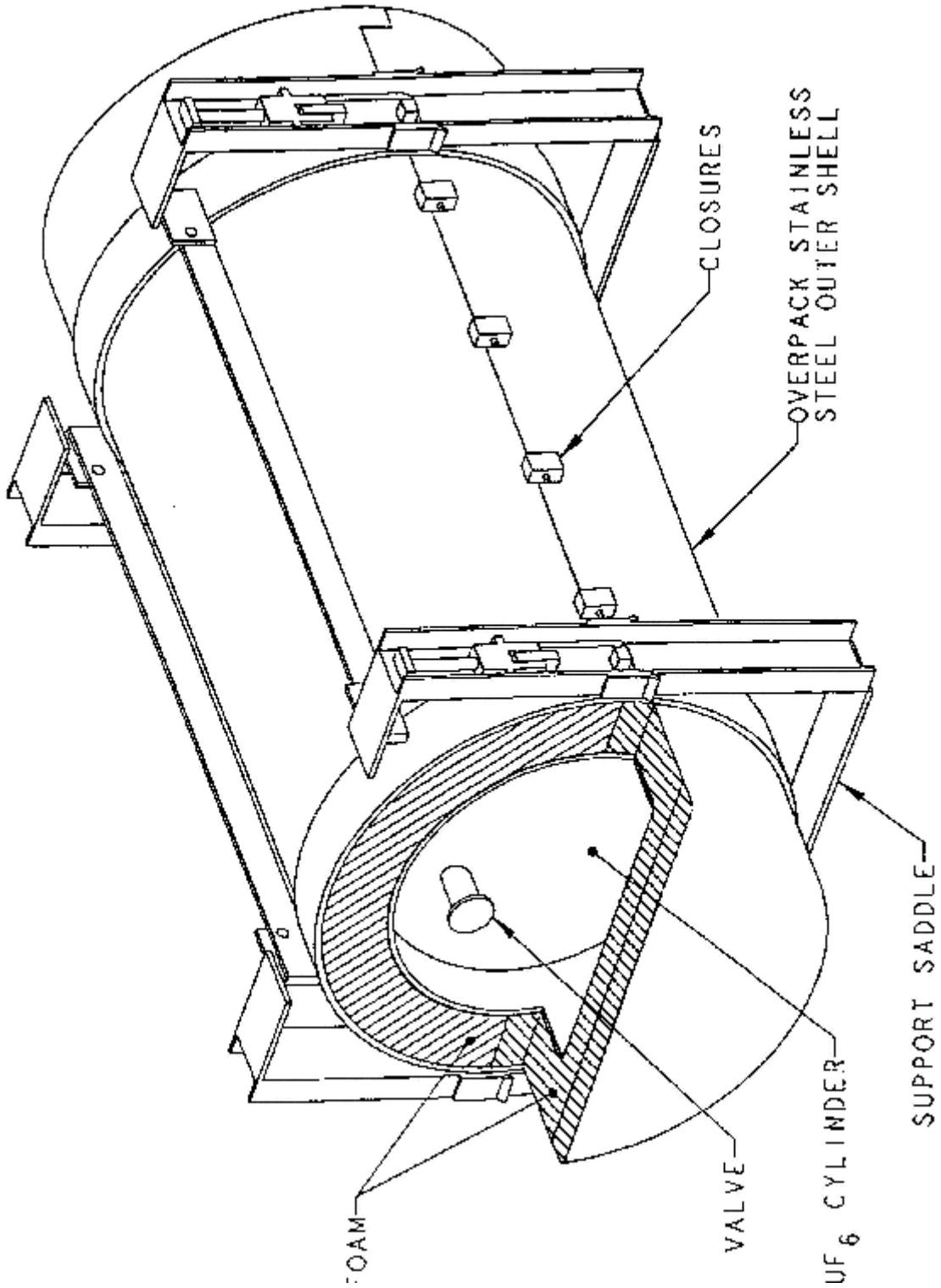

Figure A.6-1 Sketch of a typical UF_6 package (cylinder and overpack)

The cylinder is defined as the containment boundary for the UF_6. Unirradiated uranium enriched to less than 5 percent is a Type A quantity. Recycled uranium can be a Type B quantity due the presence of uranium-232, uranium-234, uranium-236, and various radioactive impurities.

Shielding requirements are generally not significant because of the low radioactivity and self-shielding of UF_6. If the contents are recycled uranium, the shielding evaluation should show that the package will meet the dose rate limits in 10 CFR 71.47, "External Radiation Standards for All Packages," and 10 CFR 71.51, "Additional Requirements for Type B Packages," during normal conditions of transport and hypothetical accident conditions, respectively. Compliance with regulatory limits for radiation levels is verified prior to shipment.

The overpack provides thermal protection to prevent overheating of the UF_6, which can cause hydraulic failure of the cylinder. The overpack also provides impact protection for the cylinder and the valve.

Safety Features

- The steel cylinder precludes inleakage of water and provides containment under normal conditions of transport and hypothetical accident conditions.

- The cylinder skirt provides some protection to the valve during handling operations, normal conditions of transport, and hypothetical accident conditions.

- The overpack provides structural and thermal protection for the cylinder and its valve under hypothetical accident conditions.

A.6.4 Typical Areas of Review for Package (Overpack) Drawings

- overpack shell
  - materials of construction
  - dimensions and tolerances
  - vents for pressure relief of foam combustion products

- foam specifications
  - type
  - density
  - compressive strength
  - fire retardant characteristics
  - limit on free chlorides

- closure devices
  - torque
  - valve protection device

A.6.5 Typical Areas of Safety Review

- The structural review concentrates on the ability of the overpack to protect the valve under hypothetical accident conditions. Note that 10 CFR 71.55(g) specifically

addresses moderator exclusion [i.e., exception from the requirements in 10 CFR 71.55(b)] in UF_6 packages, in part, in terms of the post-hypothetical accident conditions configuration of the valve body and other components of the packaging.

- The structural and thermal reviews address the ability of the overpack to provide protection to the cylinder itself under hypothetical accident conditions. Because of the heat capacity of the UF_6 and the high pressure that can result due to a phase change at high temperatures, a partially filled cylinder may be more susceptible to hydraulic failure than a full cylinder.

- The containment review verifies that the cylinder meets the containment criteria in ANSI N14.5 for Type B packages.

- The criticality review confirms that there is no water inleakage under normal conditions of transport and hypothetical accident conditions. For UF_6 packages that meet the requirements in 10 CFR 71.55(g), the minimum criticality safety index (CSI) is 5.0 based on design and regulatory practice to date. For other UF_6 packages, the minimum CSI will be determined on a case-by-case basis.

- The review of operating procedures ensures that the valve is properly closed and leak-tested, as appropriate, and that the valve protection device, if applicable, is installed. This review also confirms that the radiation levels are verified to meet the regulatory limits prior to transport.

- The review of the acceptance tests and the maintenance program evaluates the inspection procedures for the overpack, including the physical condition of the inner and outer shells, corrosion, performance of the foam while the overpack is in service, and wear of cushioning pads between the cylinder and overpack. The review also verifies that the cylinder is tested and maintained in accordance with the requirements in 49 CFR 173.420, "Uranium Hexafluoride (Fissile, Fissile Excepted and Nonfissile)," and ANSI N14.1. For foam-filled overpacks, the acceptance tests for the foam should include reasonable ranges for material density, compressive strength, thermal conductivity, etc. Structural analyses may be used to justify the ranges. Reference to American Society for Testing and Materials International standards should be reviewed to ensure that the standard does not overly restrict the testing of foam characteristics.

Several NRC information notices (IN-92-58, IN-97-24, IN-97-20, and IN-16-06) and Bulletin 94-02 provide additional detail on safety issues relevant to the transport of uranium hexafluoride packages.

A.6.6 References

American National Standards Institute, "Radioactive Materials–Leakage Tests on Packages for Shipment," ANSI N14.5-2014, New York.

Institute for Nuclear Materials Management, "Nuclear Materials—Uranium Hexafluoride—Packagings for Transport," ANSI N14.1-2012, New York.

U.S. Enrichment Corporation, "The UF_6 Manual: Good Handling Practices for Uranium Hexafluoride," USEC-651, Revision 10, 2017.

U.S. Nuclear Regulatory Commission, “Corrosion Problems in Certain Stainless Steel Packagings Used to Transport Uranium Hexafluoride,” NRC Bulletin 94-02, November 14, 1994.

U.S. Nuclear Regulatory Commission, “Uranium Hexafluoride Cylinders—Deviations in Coupling Welds,” NMSS Information Notice 92-58, August 12, 1992.

U.S. Nuclear Regulatory Commission, “Identification of Certain Uranium Hexafluoride Cylinders that Do Not Comply with ANSI N14.1 Fabrication Standards,” NMSS Information Notice 97-20, April 17, 1997.

U.S. Nuclear Regulatory Commission, “Failure of Packing Nuts on One-Inch Uranium Hexafluoride Cylinder Valves,” NMSS Information Notice 97-24, May 8, 1997.

U.S. Nuclear Regulatory Commission, “Uranium Hexafluoride Cylinders with Potentially Defective 1-Inch Valves,” NMSS Information Notice 16-06, May 12, 2016.

A.7 High-Enriched Uranium or Plutonium Packages

A.7.1 Purpose of Package

The purpose of this type of package is to transport Type B quantities of high-enriched uranium or plutonium (other than by air).

A.7.2 Description of a Typical Package

A typical packaging consists of a containment vessel and an outer container. Note that some older packages for transport of plutonium may have two containment boundaries. This is because prior to the NRC’s 2004 rule change, plutonium quantities in excess of 20 Ci required double containment.

The outer container is a steel drum with a removable head and weather-tight gasket. The head is usually secured by a clamp ring with a tamperproof seal. Vent holes near the top of the drum, which provide pressure relief under hypothetical accident conditions, are capped or taped during normal conditions of transport to prevent water inleakage.

The inner containment vessel is a steel container, typically a stainless-steel cylinder, with a maximum outer diameter of 0.127 m (5 in.), closed by a welded bottom cap and a welded top flange with a bolted lid. The lid, which is sealed by two O-rings, contains a leak-test port and sometimes a separate fill port for leak testing. Unless double containment is provided, this containment vessel is centered in position inside the outer container by fiberboard (or similar material) insulating material. If the package contains a second containment vessel, then the inner (primary) containment vessel is positioned inside a secondary containment vessel.

The contents are uranium or plutonium, typically in metal, oxide, or nitrate form. The uranium or plutonium is generally placed in plastic bags or metal cans prior to loading into the containment vessel. Spacers are often used to maintain the position of the contents. While uranium may be in liquid form (if so, verify there is sufficient ullage or other specified provision for expansion of the liquid), shipments of plutonium in excess of 20 Ci must be shipped as a solid.

A sketch of a typical package for high-enriched uranium is presented in Figure A.7-1. A package for plutonium would be similar, except that a second containment system may be present.

A.7.3 Package Safety

Safety Functions

The principal functions of the package are to provide containment and criticality control.

Package design features that accomplish the containment and criticality functions generally also provide adequate shielding to satisfy the requirements for nonexclusive-use shipment. Additional shielding may be required if significant quantities of certain isotopes [e.g., plutonium-238 or americium-241 (from the decay of plutonium-241)] are present.

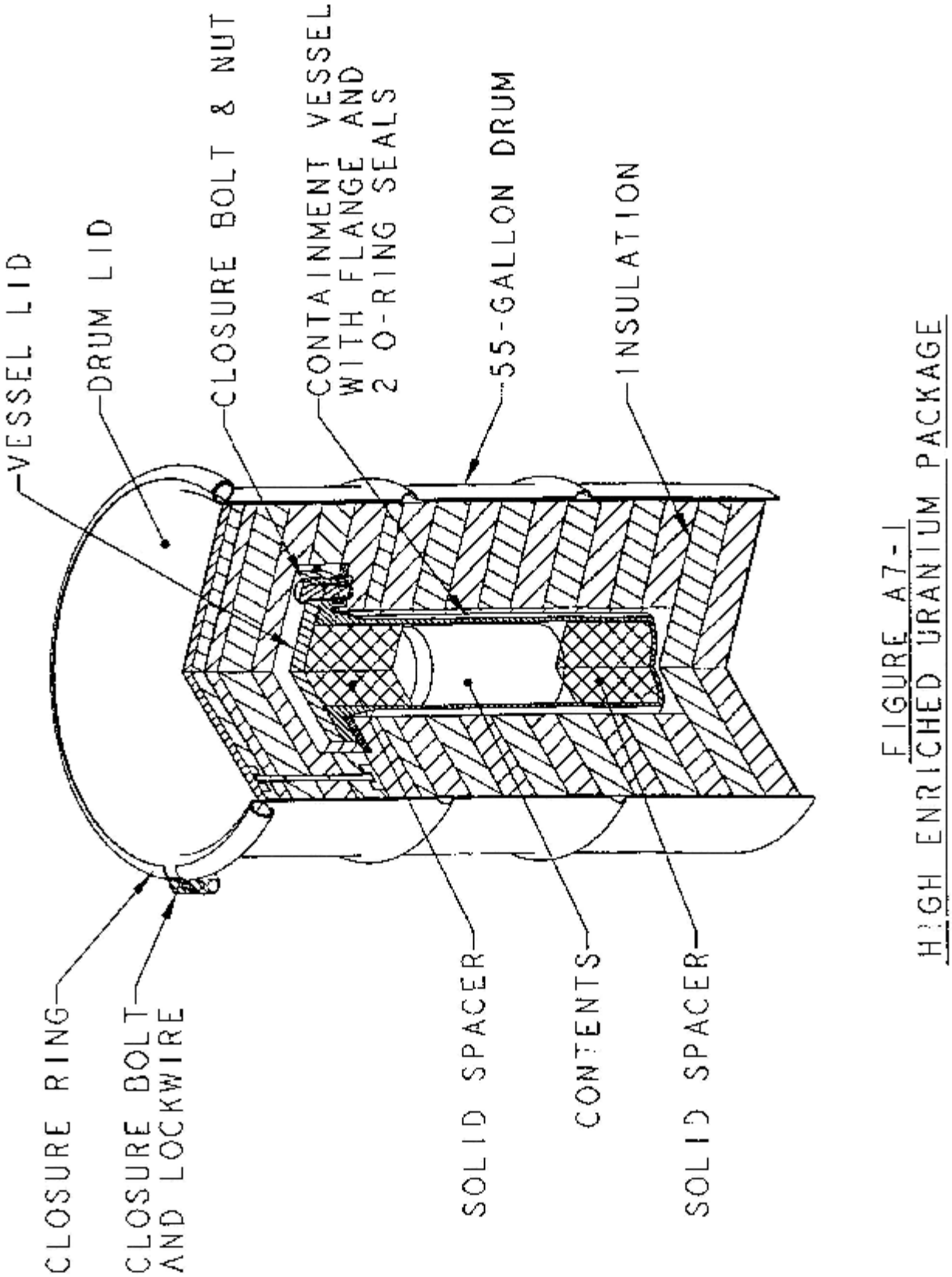

Figure A.7-1 Sketch of a typical package for high-enriched uranium

Safety Features

- The steel drum and insulating material protect the containment vessel and contents under hypothetical accident conditions and maintain a minimum spacing between packagings for criticality control.

- The steel inner vessel provides containment of the radioactive material. An additional containment vessel may provide containment for plutonium.

- The diameter and volume of the inner containment vessel, together with limits on the fissile mass of the contents, ensure that a single package is subcritical.

- The containment vessel, insulating material, and steel drum maintain a minimum distance from the contents to the package surface and provide some attenuation to satisfy the shielding requirements.

A.7.4 Typical Areas of Review for Package Drawings

- containment vessel body

  — materials of construction
  — dimensions and tolerances, including maximum cavity dimensions
  — fabrication codes or standards
  — weld specifications, including codes or standards for nondestructive examination

- containment vessel closures

  — lid materials, dimensions, and tolerances
  — bolt specifications, including number, size, and torque
  — seal material, size, and compression specifications
  — seal groove dimensions
  — leak-test ports

- spacers to position or displace fissile material

  — material of construction
  — dimensions and tolerances
  — locations

- insulating material

  — type
  — dimensions and tolerances
  — density

- outer drum

  — material
  — closure, including use of heavy-duty clamp ring, bolt torque
  — dimensions
  — applicable codes or standards

A.7.5 Typical Areas of Safety Review

- The structural review confirms that packaging integrity is maintained under the drop, crush, and puncture tests. The review also verifies that the drum lid remains securely in place. NUREG/CR-6818 discusses potential issues related to steel drum closure lid design.

- The structural and thermal reviews evaluate the performance of the containment system under both normal conditions of transport and hypothetical accident conditions. Primary emphasis is on the structural integrity of the inner vessel and its closure, and on the thermal performance of the O-rings.

- The structural and thermal reviews address the condition of the package and the minimum spacing between different packages under hypothetical accident conditions. Damage to the outer drum and charring of the insulating material may result in closer spacing than that of normal conditions of transport.

- The thermal and containment reviews verify that the combustible gas concentration in any confined volume will not exceed 5 percent (by volume), or lower if warranted by the combustible gas, during a period of 1 year. Shorter time periods have been approved based on detailed operating procedures to control and track the shipment of packages; this would be documented as a CoC condition.

- The criticality review addresses in detail both normal conditions of transport and hypothetical accident conditions. Key parameters for this review include the number of packages in the arrays, array configuration (pitch, orientation of packages, etc.), positioning of the containment vessels within the drum, moderation due to inleakage of water, the condition and quantity of spacing material, and interspersed moderation between packages.

- The contents specification may include multiple loadings, each of which is separately evaluated for criticality safety. Such multiple loadings may include ranges of fissile material enrichment, ranges of hydrogen atoms per atom of fissile material (H/X), and minimum CSI. The applicant may construct the multiple loadings, including ranges that satisfy criticality safety requirements, so as to allow maximum flexibility for operations.

- The review of operating procedures confirms that the containment vessels have been properly closed and bolts torqued, and that an appropriate pre-shipment leak test is performed.

- The review of the acceptance tests and the maintenance program verifies that appropriate fabrication, maintenance, and periodic verification leakage tests are performed.

A.8 <u>Type B Special Form Packages</u>

A.8.1 Purpose of Package

The purpose of this type of package is to transport a Type B quantity of radioactive material in special form.

A.8.2 Description of a Typical Package

A typical packaging consists of a package body with a lid, base, and protective jacket.

The package body is a lead-filled cylinder with a stainless-steel inner and outer shell. A drain tube penetrates the cavity and is sealed with a plug, which is covered by the protective jacket during transport. A lead-filled (or other high-density shielding material), stainless-steel lid is bolted to the tapered top of the main body and sealed with a weather-tight gasket. Both the body and the lid generally have lifting devices that are covered during shipment by the protective jacket (overpack).

The base is a square steel skid that bolts to the protective jacket. The skid consists of energy-absorbing steel angles (stiffeners). Several I-beams are welded to the base to enable handling by a forklift.

The protective jacket is a double-walled steel cylinder with an open bottom and a protruding box section positioned diametrically across the top and vertically down the sides. The jacket may contain thermal insulation. A steel flange bolts to the base, and the main body of the packaging is centered within the jacket by steel tubes welded to the jacket inner wall. Steel lifting loops are typically welded to the top corners, and tie-down devices are welded to the sides.

The contents of the package typically consist of byproduct material in special form. A sketch of a typical Type B special form package is presented in Figure A.8-1.

A.8.3 Package Safety

<u>Safety Functions</u>

The principal safety function of the package is to provide radiation shielding. Containment is provided primarily by the special form source itself. The packaging must maintain the sources in the fully shielded configuration under normal conditions of transport and hypothetical accident conditions.

<u>Safety Features</u>

- The lead shield or other high-density shielding material (e.g., depleted uranium) provides shielding for gamma radiation.
- The protective jacket provides structural and thermal protection to the main body, which contains the special form radioactive material.

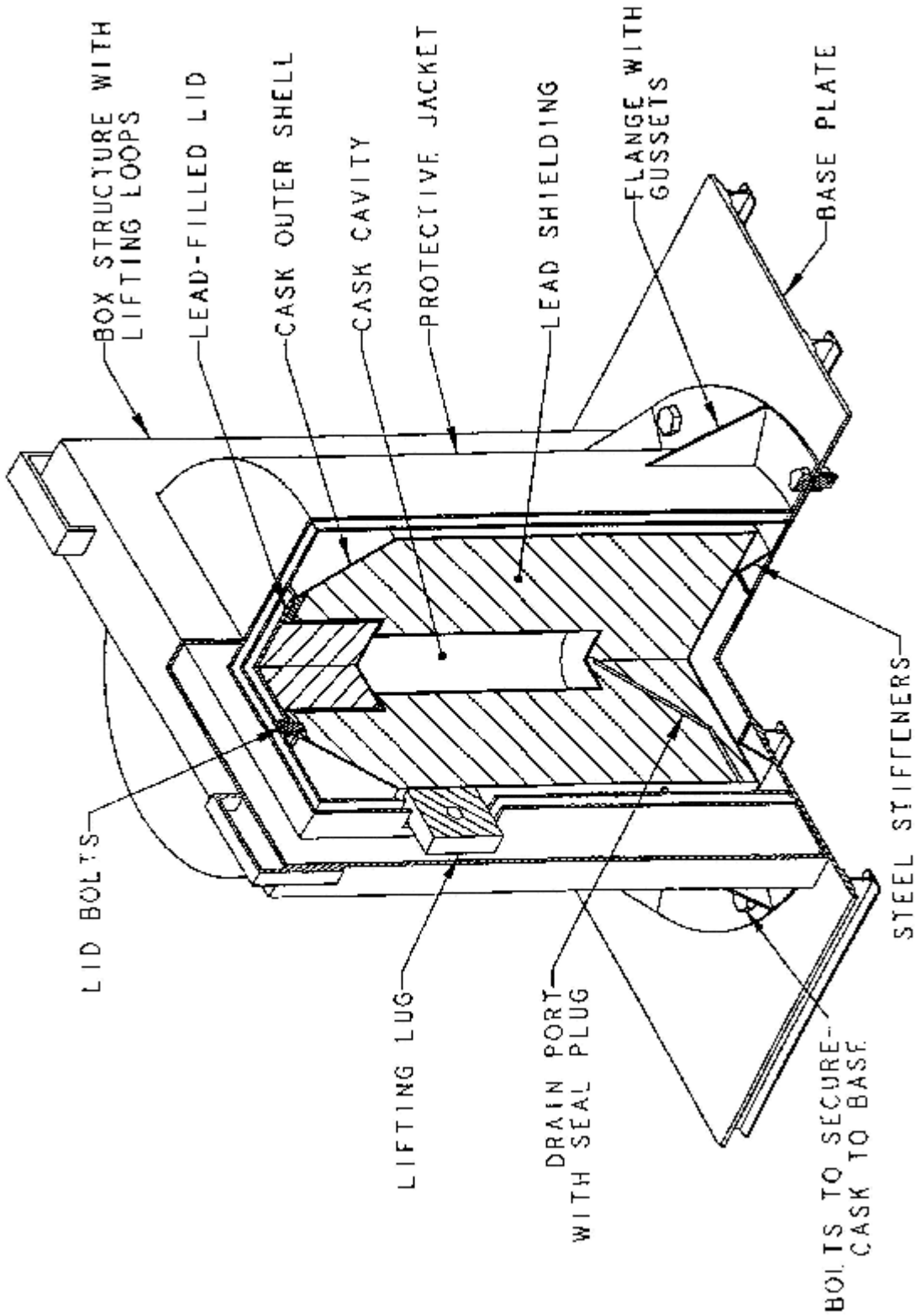

Figure A.8-1 Sketch of a typical Type B special form package

A.8.4 Typical Areas of Review for Package Drawings

- package body

  — materials of construction
  — dimensions and tolerances of steel shells and gamma shield
  — fabrication codes or standards, including any special processes for lead pour
  — weld specifications, including codes or standards for nondestructive examination

- closures

  — lid materials and their dimensions and tolerances
  — bolt specifications, including number, size, minimum thread engagement, and torque
  — seal material, size, and compression specifications
  — seal groove dimensions
  — vent and leak-test ports, including closure methods

- protective jacket

  — method of attachment
  — bolt specifications, including number, size, minimum thread engagement, and torque
  — insulating material

A.8.5 Typical Areas of Safety Review

- The review of the general information verifies that the contents are special form. Note that the certificate of compliance will be conditioned to require the contents to be in special form.

- The structural and thermal reviews evaluate the ability of the shield to perform its intended function under normal conditions of transport and hypothetical accident conditions. Lead slumping should be inconsequential, and the lead should not melt. For packages with depleted uranium shields, the package design should ensure that the damage from the drop and puncture tests does not allow the depleted uranium to be exposed to air during the thermal test, to prevent oxidation of the depleted uranium. These reviews ensure that the package has been tested under the most damaging conditions (e.g., impact orientation). The integrity of the package closure and bolts is also reviewed.

- The thermal review should verify that no credit has been taken for the presence of helium in gaps between packaging components. The review should verify that the heat transfer medium is air, and that the effects of air on the contents and packaging components have been addressed.

- The shielding review evaluates the ability of the package to satisfy the allowed radiation levels during both normal conditions of transport and hypothetical accident conditions.

- The review of operating procedures verifies that the package has been appropriately drained and that the bolts are properly torqued.

- The review of the acceptance tests and the maintenance program ensures that appropriate tests are specified for shielding and thermal performance.

- O-ring seals for packages containing special form sources may have limited safety significance (e.g., weather shield), because most of the radioactivity is within the special form source. O-rings would retain any contamination that might be within the package and introduced during source loading, etc. O-ring seals may be shown in a general configuration, and optional materials may be shown. O-ring replacement schedules may be omitted, provided that the O-ring is inspected and replaced when damaged.

A.9 Mixed Oxide Powder and Pellet Packages

A.9.1 Purpose of Package

The purpose of this type of package is to transport Type B quantities of mixed-oxide (MOX) material (other than by air).

A.9.2 Description of a Typical Package

A typical packaging consists of an inner containment vessel or vessels and an outer container that serves to confine the package's internals. The outer container is a steel drum with a removable head and weather-tight gasket. The head usually is a bolted or clamped lid with a tamperproof seal. Vent holes near the top of the drum, which provide pressure relief from combustion gases or off-gassing from insulating materials under hypothetical accident conditions, are capped or taped during transport to prevent water inleakage.

The inner containment vessel is a steel container, typically a stainless-steel cylinder, with a maximum inner diameter of 0.127 m (5 in.), closed by a welded bottom cap and a welded top flange with a bolted lid. The lid, which is generally sealed by two O-rings, contains a leak-test port and sometimes a separate fill port for leak testing.

A product container may be used and may be designed similar to the primary containment vessel. It can include welded and bolted bottom cap and top flange, respectively; dual O-ring seals; a leak test port; and sometimes a separate fill port for leakage testing. (See, for example, Figure A.9-1.)

The contents are MOX powder or pellets. The MOX powder or pellets are generally placed in metal cans prior to loading into the containment vessel. Solid spacers are often used to maintain the position of the contents.

Note that essentially all packages shipping bulk unirradiated MOX powder and pellets will be designated as Category I packages per Regulatory Guide 7.11, "Fracture Toughness Criteria of Base Material for Ferritic Steel Shipping Cask Containment Vessels with a Maximum Wall Thickness of 4 Inches (0.1 m)." Also, because of the greater radiological hazard of MOX (vs. LEU), MOX requires shipment in a Type B package.

A sketch of a typical package with an optional inner containment vessel is shown in Figure A.9-1.

A.9.3 Package Safety

Safety Functions

The principal functions of the package are to provide containment, shielding, and criticality control. Package design features that accomplish the containment and criticality functions might also provide adequate shielding to satisfy the requirements for nonexclusive-use shipment. Additional shielding may be required if significant quantities of certain isotopes [e.g., plutonium-236, plutonium-238, plutonium-241, or americium-241 (from the decay of plutonium-241)] are present in the MOX material.

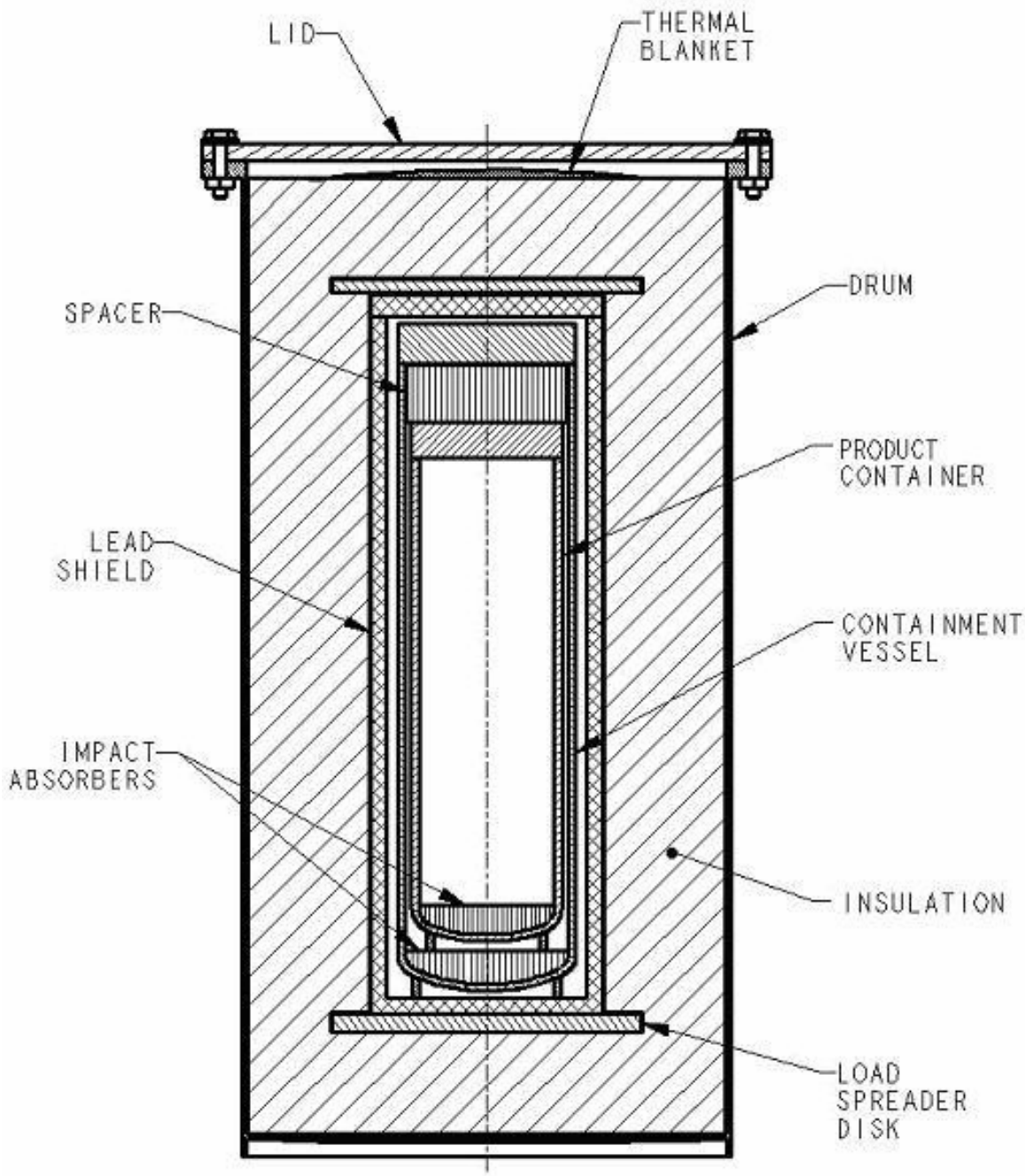

Figure A.9-1 Sketch of a typical package with an optional inner containment vessel

Safety Features

- The steel drum and thermal insulating/impact absorbing material protect the containment vessel(s) and contents and maintain a minimum spacing between packages for criticality control.

- Typically, the inner vessel(s) provides containment of the radioactive material.

- The diameter and volume of the inner containment vessel(s), together with limits on the fissile mass of the contents, ensure that a single package is subcritical, even with water inleakage.

- The containment vessel(s), thermal insulating/impact absorbing material, and steel drum maintain a minimum distance from the contents to the package surface and provide some attenuation to satisfy the shielding requirements.

A.9.4 Typical Areas of Review for Package Drawings

- containment vessel body

  — materials specifications
  — dimensions and tolerances, including maximum cavity dimensions
  — fabrication codes or standards
  — weld specifications, including codes or standards for nondestructive examination

- containment vessel closures

  — lid material specifications, dimensions, and tolerances
  — bolt specifications, including number, size, material, and torque
  — seal material specifications and size
  — seal groove dimensions
  — leak-test ports
  — applicable codes and standards

- spacers to position or displace fissile material

  — material of construction
  — dimensions and tolerances
  — locations

- thermal insulating/impact absorbing material

  — type and specifications
  — dimensions and tolerances
  — density

- outer drum

  — material specifications, including lid and closure device
  — closure bolt specifications, including number, size, material, and torque
  — dimensions and tolerances

— applicable codes or standards

- neutron poisons

  — dimensions and tolerances
  — minimum poison content
  — location and method of attachment
  — material specifications
  — applicable codes and standards

- gamma- and neutron-shielding materials

  — material specifications
  — dimensions and tolerances

A.9.5 Typical Areas of Safety Review

- The review considers the characteristics of MOX materials described in Appendix B to this SRP for shielding and thermal reviews. This includes the higher specific content decay heat rate (vs. LEU material) for the thermal review and the need to evaluate the radiation source term as for other Type B packages (e.g., spent nuclear fuel, others) for the shielding review.

- The structural review confirms that packaging integrity is maintained under both normal conditions of transport and hypothetical accident conditions, particularly the drop, crush, and puncture tests. The review also verifies that the drum lid remains securely in place and the drum body and closure have no unacceptable openings that would cause the safety performance of the package to not meet regulatory standards, especially during the fire test.

- The structural and thermal reviews evaluate the performance of the containment system under both normal conditions of transport and hypothetical accident conditions. Primary emphasis is on the structural integrity of the containment vessel and its closure, and on the thermal performance of the O-rings. Failure of the lift and tie-down devices should not impair the containment system's ability to perform its functions.

- The structural and thermal reviews address the condition of the package and the minimum spacing between different packages under hypothetical accident conditions. Damage to the outer drum and charring of the thermal insulating/impact-absorbing material may result in closer spacing than that of normal conditions of transport.

- The thermal and containment reviews verify that the combustible gas concentration in any confined volume will not exceed 5 percent (by volume), or lower if warranted by the combustible gas, during a period of 1 year. Shorter time periods have been approved based on detailed operating procedures to control and track the shipment of packages; this would be documented as a CoC condition.

- The thermal review evaluates the maximum normal operating pressure of the package similar to what is done for plutonium oxide powder and pellet packages, accounting for the possibility of gases (hydrogen, others) generated by thermal or radiation

decomposition of moisture in impure plutonium-containing oxide powders (contribution is expected to be small).

- The thermal review, for hypothetical accident conditions, (1) evaluates the package at the maximum heat load of the contents unless a lower value is more unfavorable and (2) considers any increase in pressure from helium released from the contents with increasing temperatures (this pressure contribution is expected to be small because the temperature increase is small versus processing temperatures).

- The containment review evaluates the containment design criteria to ensure they are appropriately and correctly applied to the containment system and the criteria are supported by calculations that demonstrate the package meets the regulatory limits for releases.

- The shielding review evaluates the ability of the package to satisfy the allowed radiation levels during both normal conditions of transport and hypothetical accident conditions.

- The shielding review evaluates the radiation source terms for appropriate consideration of contributing aspects of the contents. This includes accounting for plutonium-236, plutonium-238, plutonium-239, plutonium-240, plutonium-241, plutonium-242, and americium-241 (from plutonium-241 decay) when these nuclides are present in the contents for their contributions to the gamma- and neutron-source terms. This also includes ensuring consideration of (α, n) reactions, spontaneous fission and neutron multiplication contributions to the neutron source, and definition of an appropriate energy structure of the neutron source. Appendix B to this SRP describes different gamma and neutron emission rates for various transuranic elements and MOX with different grades of plutonium.

- The criticality review addresses, in detail, both normal conditions of transport and hypothetical accident conditions. Key parameters for this review include the number of packages in the arrays, array configuration (e.g., pitch, orientation of packages), the physical condition and properties of packaging components, positioning of the containment vessel within the drum, moderation due to inleakage of water, the condition and quantity of spacing material, interspersed moderation between packages, preferential flooding of different regions within the package, packaging materials that provide moderation (e.g., plastics), and neutron poisons.

- For the criticality review, the differences between the package and benchmark experiments may be more substantial because the number of experiments for MOX are fewer (vs. LEU); therefore, it may be more difficult to properly consider these differences and assign a bias value. The review considers the information and guidance in Appendix D to this SRP regarding available MOX benchmark experiments and their important characteristics and how to select appropriate benchmark experiments and how to determine a conservative bias from the benchmark analysis.

- The materials review evaluates the material properties of the packaging components. Important considerations include the material properties of closure components (e.g., seals, bolts) of the containment vessel(s) and the outer packaging. The review ensures these components have the required strength and other properties under normal conditions of transport and hypothetical accident conditions. This includes resistance to conditions such as stress-corrosion cracking; differences in thermal

expansion (bolts vs. bolted items); chemical, galvanic, or other reactions among materials; and radiation effects. Other important considerations include the material properties of any gamma and neutron shields and any neutron poisons that are present in the package under normal conditions of transport and hypothetical accident conditions. The review should identify any undesirable conditions. Powder contents with high moisture content are particularly susceptible to gas generation due to radiolysis.

- The review of operating procedures confirms that the containment vessel(s) has been properly closed and its closure bolts are properly tightened to the specified torque values, and that an appropriate pre-shipment leak test is performed.

- The review of the acceptance tests and the maintenance program verifies that appropriate fabrication, maintenance, and periodic verification leakage tests are performed. This includes appropriate fabrication leak tests and maintenance actions (e.g., checks of seal condition, seal replacement, testing of new seals), with acceptance criteria and requirements that are consistent with those identified in the confinement review.

- The review of the acceptance tests and the maintenance program also verifies that gamma shielding, neutron shielding, and neutron poisons, if any, are present and are subject to appropriate acceptance tests and maintenance actions to ensure they are fabricated and maintained to meet the design and regulatory requirements. For neutron poisons, this includes acceptance and qualification tests to ensure and verify the poison properties meet the minimum required specifications (e.g., minimum boron-10 concentration and uniformity).

A.9.6 Reference

Regulatory Guide 7.11, U.S. Nuclear Regulatory Commission, “Fracture Toughness Criteria of Base Material for Ferritic Steel Shipping Cask Containment Vessels with a Maximum Wall Thickness of 4 Inches (0.1 m),” ADAMS Accession No. ML003739413.

A.10 Unirradiated Mixed Oxide Fuel Packages

A.10.1 Purpose of Package

The purpose of this type of package is to transport unirradiated MOX fuel assemblies and individual MOX fuel rods. These packages are also referred to as “MOX fresh fuel packages.”

This appendix addresses those packages in which the contents are Type B quantities of fissile MOX material. Because of the greater radiological hazard from MOX (vs. LEU), MOX requires shipment in a Type B package. The fissile MOX material can be in an entire assembly or as individual fuel rods.

A.10.2 Description of a Typical Package

A typical packaging consists of a metal outer shell, closed with bolts and elastomeric seals, and an impact-limiter system. An internal steel strongback, shock-mounted to the outer shell, supports one or more fuel assemblies, which are fixed in position on the strongback by clamps, separator blocks, and end support plates. Depending on the type of fuel, neutron poisons may

be used to reduce reactivity. Material surrounding the contents could be employed to shield against neutrons and/or gammas. If the package is used to transport individual fuel rods, a separate inner container is often employed.

The contents of the package are unirradiated MOX in fuel assemblies or individual fuel rods. Because the majority of these packages are for commercial reactor fuel, the MOX is typically in the form of Zircaloy-clad plutonium-uranium dioxide pellets.

A sketch of the typical package described above is shown in Figure A.10-1.

A.10.3 Alternative Package Design

In an alternative design for a MOX fresh fuel package, the fuel assemblies are fixed in position by two or three steel channels, mounted by angle irons or a similar bracing structure to a thin-walled inner metal container. This inner container is in turn surrounded by a honeycomb material and enclosed in a metal outer shell. Foam cushioning material can be used to cushion the fuel assemblies and may be used between the inner and outer container.

A.10.4 Package Safety

Safety Functions

The principal functions of the package are to provide containment, shielding, and criticality safety. Package design features that accomplish the containment and criticality functions might also provide adequate shielding to satisfy the requirements for nonexclusive-use shipment. Additional shielding may be required if significant quantities of certain isotopes [e.g., plutonium-236, plutonium-238, plutonium-241, or americium-241 (from the decay of plutonium-241)] are present in the MOX material.

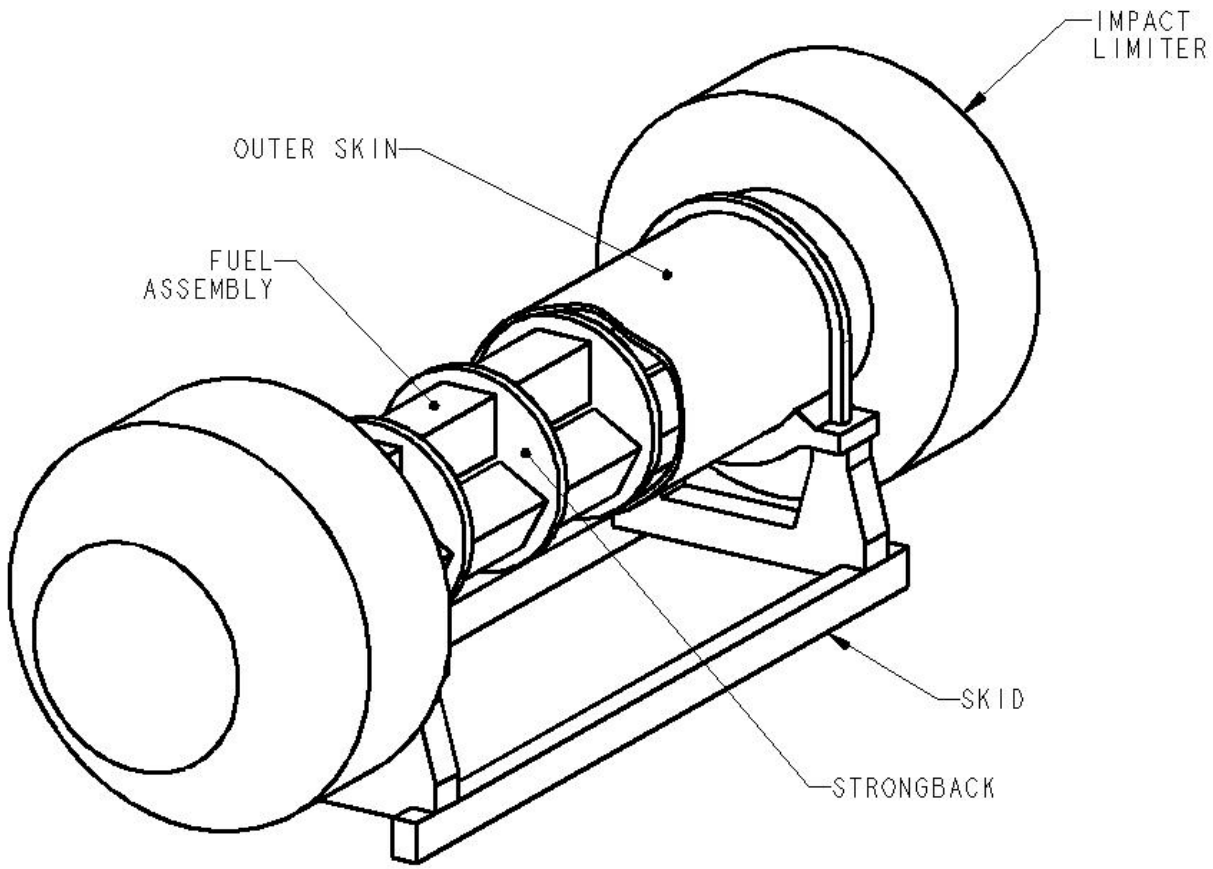

Figure A.10-1 Sketch of the typical MOX fresh fuel package

Safety Features

- Impact limiters protect the outer shell and contents under hypothetical accident conditions. They also provide thermal insulation for the O-ring seals of the outer shell.
- A strongback with end-support plates, clamps, and separators maintains the fuel assemblies in a fixed position relative to each other and to any neutron poisons.
- The metal outer shell of the packaging retains and protects the fuel assemblies and may provide a minimum spacing between assemblies in an array of packages and provide some attenuation to satisfy the shielding requirements.
- Neutron poisons, if present, reduce reactivity and can provide some neutron shielding.
- The metal outer shell also provides containment of the radioactive material.

A.10.5 Typical Areas of Review for Package Drawings

- outer shell (containment vessel body)
  - — material specifications
  - — dimensions and tolerances

- — fabrication codes and standards
- — weld specifications, including codes or standards for nondestructive examination

- outer shell closure (containment vessel closure)

  - — lid materials, dimensions, and tolerances
  - — bolt specifications, including number, size, and torque
  - — seal material, size, and compression specifications
  - — seal groove dimensions
  - — leak-test ports
  - — applicable codes and standards

- structural components (e.g., strongback, support plates, fuel clamps, separators) that fix the position of fuel assemblies or relative position between fuel assemblies and poisons

  - — dimensions, tolerances, and material specifications
  - — methods of attachment
  - — applicable engineering codes or standards

- thermal insulating/impact absorbing and/or shielding material

  - — type and (material) specifications
  - — dimensions and tolerances
  - — density

- neutron poisons

  - — dimensions and tolerances
  - — minimum poison content
  - — location and method of attachment
  - — material specifications
  - — applicable codes and standards

- moderating materials, including plastics, wood, and foam

  - — location
  - — material properties

Drawings should include reasonably lenient dimensional tolerances for the packaging components to allow practical fabrication variability. For example, the outer length of the container may vary without affecting the package's performance. Dimensions that are important with respect to criticality safety should be strictly limited. For example, the separation distance provided by certain structural features (e.g., clamps, spacers) may be important for criticality safety, and those features should be identified with close tolerances.

A.10.6 Typical Areas of Safety Review

- The general information review identifies the fuel assembly designs authorized in the package, including the following:

  - — number of and arrangement of fuel assemblies

— number, pitch, dimensions (with tolerances), and position of fuel rods, guide tubes, water rods, and channels

— material specifications of the cladding, guide tubes, water rods, and channels

— overall assembly dimensions, including active fuel length

— authorization or restrictions on missing fuel rods or partial-length rods

— maximum amount of fissile material

— pellet dimensions and tolerances

— minimum cladding thickness

— fuel-clad gap and fill gas

— type, location, and concentration of burnable poisons, and other types of poisons

— type, location, and quantity of plastics, such as polyethylene, within or surrounding the fuel assemblies

- The review considers the characteristics of MOX materials described in Appendix B to this SRP for shielding and thermal reviews. This includes the higher specific content decay heat rate (vs. LEU material) for the thermal review and the need to evaluate the radiation-source term as for other Type B packages (e.g., spent nuclear fuel, others) for the shielding review.

- The structural and thermal reviews evaluate the performance of the containment system under both normal conditions of transport and hypothetical accident conditions, particularly the drop, crush (if needed), and puncture tests. Primary emphasis is on the structural integrity of the outer shell (containment vessel) and its closure, and on the thermal performance of the elastomeric seals. If the impact limiters provide thermal protection for the seals, the structural review also confirms the structural integrity of the impact limiters.

- The structural review addresses possible damage to the impact limiters, outer shell, strongback, fuel assembly, neutron poisons (if present), clamps, separators, and end support plates to ensure that the fuel assemblies and neutron poisons are maintained in a fixed position relative to each other under hypothetical accident conditions.

- The criticality reviewer will consult with the structural and thermal reviewers on the minimum spacing between fuel assemblies in different packages in an array under hypothetical accident conditions. Spacing can be affected by separation of the strongback from its shock mounts, failure of the shock mounts or fuel-assembly clamps, and deformation of the outer shell of the package. Damage to the outer shell and charring of any thermal insulating/impact absorbing material (if present) may result in closer spacing than that of normal conditions of transport.

- The thermal review evaluates the effect of the fire on outer-shell O-ring seals, neutron poisons, plastic sheeting, thermal insulation material (if present), or other temperature-sensitive materials under hypothetical accident conditions.

- The thermal review evaluates the fuel/cladding temperatures, along with the temperatures of packaging components relied on for structural, containment, shielding, or criticality design and performance. This evaluation is to confirm limits are met and to ensure cladding and package component performance for normal conditions of transport and hypothetical accident conditions. Fuel rod and assembly temperatures can be evaluated with temperature-sensing devices placed on the basket and fuel rods.

- The thermal review evaluates the maximum normal operating pressure when the package is subjected to the heated condition for 1 year, accounting for all sources of gases (e.g., those present in the package at the time of closure, fill gas released from rods). The review also evaluates the thermal gradients through the fuel/clad and package components.

- The thermal review, for hypothetical accident conditions, (i) evaluates the package at the maximum heat load of the contents unless a lower value is more unfavorable and (ii) evaluates the package pressures, considering possible gas increases (e.g., from an unlikely fuel rod failure).

- The containment review evaluates the containment design criteria to ensure (1i) they are appropriately and correctly applied to the containment system, and (ii) they are supported by calculations that demonstrate the package meets the regulatory limits for releases. The reviewer should verify that the applicant has justified the releasable source terms in the calculations.

- The shielding review evaluates the ability of the package to satisfy the allowed radiation levels during both normal conditions of transport and hypothetical accident conditions.

- The shielding review evaluates the radiation-source terms for appropriate consideration of contributing aspects of the contents. This includes accounting for plutonium-236, plutonium-238, plutonium-239, plutonium-240, plutonium-241, plutonium-242, and americium-241 (from plutonium-241 decay) when these nuclides are present in the contents for their contributions to the gamma- and neutron-source terms. This also includes ensuring consideration of (α, n) reactions, spontaneous fission, neutron multiplication contributions to the neutron source, and definition of an appropriate energy structure of the neutron source. Appendix B to this SRP describes different gamma and neutron emission rates for various transuranic elements and MOX with different grades of plutonium.

- The criticality review addresses both normal conditions of transport and hypothetical accident conditions. Key areas for this review include the following:

  — The number of packages in the array and the array configuration (e.g., pitch, orientation of packages): Because of movement of the strongback within the package and the location of poisons, the arrays might not be symmetrical.

  — Degree of moderation: Structural features, as well as packaging material such as plastic sheeting, are evaluated for the possibility of preferential flooding within

the package. Plastic sheeting on the fuel assemblies should be open at both ends to preclude preferential flooding. Flooding between the fuel pellets and cladding is also considered. Variations in the allowable amount of lightweight packaging material and plastic shims inserted in the fuel assemblies can also affect criticality under normal conditions of transport.

- For the criticality review, the differences between the package and benchmark experiments may be more substantial because the number of experiments for MOX are fewer (vs. LEU); therefore, it may be more difficult to properly consider these differences and assign a bias value. The review considers the information and guidance in Appendix D to this SRP regarding available MOX benchmark experiments and their important characteristics and how to select appropriate benchmark experiments and determine a conservative bias from the benchmark analysis.

- The materials review evaluates the material properties of the packaging components. Important considerations include the material properties of closure components (e.g., seals, bolts) of the containment vessel(s) and the outer packaging. The review ensures these components have the required strength and other properties under normal conditions of transport and hypothetical accident conditions. This includes resistance to conditions such as stress-corrosion cracking; differences in thermal expansion (bolts vs. bolted items); chemical, galvanic, or other reactions among materials; and radiation effects. Other important considerations include the material properties of any gamma and neutron shields and any neutron poisons that are present in the package under normal conditions of transport and hypothetical accident conditions. The review should identify any undesirable conditions. Powder contents with high moisture content are particularly susceptible to gas generation due to radiolysis.

- The review of operating procedures ensures that instructions are provided so that proper clamps, separators, and poisons are selected for the type of fuel assemblies to be shipped and that these items are properly installed prior to shipment. The procedures should also address any other restrictions (e.g., limits on number of shims and plastic wrappers to limit total polyethylene content) considered in the package evaluation. The review also confirms that instructions are provided for the proper closure of the outer shell and for the proper completion of pre-shipment leak test.

- The review of the acceptance tests and the maintenance program also verifies that gamma shielding, neutron shielding, and neutron poisons, if any, are present and are subject to appropriate acceptance tests and maintenance actions to ensure they are fabricated and maintained to meet the design and regulatory requirements. For neutron poisons, this includes acceptance and qualification tests to ensure and verify the poison properties meet the minimum required specifications (e.g., minimum boron-10 concentration and uniformity). The review also verifies that appropriate fabrication, maintenance, and periodic verification leakage tests of the outer shell are performed with acceptance criteria and requirements that are consistent with those identified in the confinement review.

APPENDIX B DIFFERENCES BETWEEN THERMAL AND RADIATION PROPERTIES OF MIXED OXIDE AND LOW-ENRICHED URANIUM RADIOACTIVE MATERIALS

The contents considered in this Standard Review Plan (SRP) appendix are unirradiated mixed oxide (MOX) radioactive material (RAM), in the form of powder, pellets, fresh fuel rods, or fresh reactor fuel assemblies. Unirradiated MOX RAM will also be referred to in this appendix as MOX fresh fuel. This appendix summarizes the relative degree of differences between the thermal and radiation properties of the various MOX RAM contents relative to similar properties for analogous low-enriched uranium (LEU) RAM contents. MOX fresh fuel can be made with plutonium having various compositions of plutonium isotopes. The discussion in this appendix makes use of the 3013 Standard (DOE 2012), which specifies the typical grades of plutonium that are used to make the MOX fresh fuel. The actual plutonium compositions found in practice may not match these compositions exactly, but these grades can be considered typical for the purposes of this appendix.

Table B–6 of the 3013 Standard gives weight percents for various plutonium isotopes in various grades of plutonium. They are reproduced in the following table (Table B–1) as representative values for typical grades of plutonium that might be used to fabricate MOX fresh fuel. Pure plutonium-239 has been included to contrast the effect of the other plutonium isotopes. Note that in addition to the isotopes identified in Table B–1, plutonium will contain plutonium-236 and americium-241 (from plutonium-241 decay).

Initially, it is expected that MOX fresh fuel will be fabricated using weapons grade (WG) plutonium. A more mature MOX fuel program might be expected to fabricate MOX fresh fuel from previously irradiated WG MOX fuel that may have a composition similar to fuel grade (FG) plutonium. Fabricating MOX fresh fuel from power grade (PG) plutonium would require a much more mature MOX fuel program.

To compare MOX fresh fuel with LEU fresh fuel, we need to choose representative compositions for each fuel type. For a reference LEU fresh fuel, we choose uranium dioxide (UO_2) with 4 weight percent (wt%) U-235 and 96 wt% U-238. For the various grades of plutonium in MOX fresh fuel, we choose UO_2-PuO_2 having 4 wt% Pu-239 with the remaining plutonium isotopes scaled as required by Table B–1, and depleted uranium with 0.2 wt% U-235 and 99.8 wt% U-238. The actual composition of MOX RAM found in practice will not match these compositions, but they are appropriate for comparing the effects of MOX RAM using various grades of plutonium. Table B–2 lists the weight percents for heavy metal isotopes used in this study.

The nuclide depletion and decay code ORIGEN-ARP (Bowman and Leal 2000) can be used to determine the heat generation rates for arbitrary compositions of plutonium with depleted uranium in MOX fresh fuel. Table B–3 lists the ratio of heat generation rates for MOX fresh fuel relative to LEU fresh fuel using the composition weight percents for MOX fresh fuel fabricated from the various plutonium grades from Table B–2 in ORIGEN-ARP. These are the values predicted at the initial time of MOX fuel fabrication when the composition weight percents for the various plutonium isotopes are as given in Table B–2. After these nuclides begin to decay, the heat generation rate decreases with time, so the initial heat generation rate is also the maximum rate.

Table B–1 Typical isotopic mix in weight percent for various grades of plutonium as specified in the 3013 Standard (DOE 2012)				
Isotope	**Pure ^{239}Pu**	**Weapons grade**	**Fuel grade**	**Power grade**
^{238}Pu	0	0.05	0.1	1.0
^{239}Pu	100	93.50	86.1	62.0 [a]
^{240}Pu	0	6.00	12.0	22.0
^{241}Pu	0	0.40	1.6	12.0
^{242}Pu	0	0.05	0.2	3.0

[a]63% reduced to 62% so that the sum is 100%. Source: DOE 2012.

Table B–2 Weight percents for heavy metal isotopes chosen for comparing MOX with LEU for various grades of plutonium					
Nuclide	**No plutonium [a]**	**Pure ^{239}Pu**	**Weapons grade [b]**	**Fuel grade [b]**	**Power grade [b]**
^{235}U	4.0000	0.1920	0.1914	0.1907	0.1871
^{238}U	96.0000	95.8080	95.5305	95.1653	93.3613
^{238}Pu	0.0000	0.0000	0.0021	0.0047	0.0645
^{239}Pu	0.0000	4.0000	4.0000	4.0000	4.0000
^{240}Pu	0.0000	0.0000	0.2567	0.5575	1.4194
^{241}Pu	0.0000	0.0000	0.0171	0.0743	0.7742
^{242}Pu	0.0000	0.0000	0.0021	0.0093	0.1935

[a]No plutonium means LEU oxide with 4 wt% uranium-235 and 96 wt% uranium-238. Note that fresh LEU fuel will normally contain traces of uranium-232, uranium-233, uranium-234, and uranium-236 from recycled and natural uranium. The quantities of these isotopes normally present in fresh LEU are not significant for the comparisons in this appendix.
[b]The plutonium mixtures will also contain plutonium-236 and americium-241. These isotopes can have a significant effect on neutron and/or gamma generation rates.

Table B–3 Ratio of heat generation rate for MOX fresh fuel composed of various grades of plutonium relative to LEU fresh fuel					
Decay time	**No plutonium**	**Pure ^{239}Pu**	**Weapons grade**	**Fuel grade**	**Power grade**
Initial	1	7,300	10,200	13,700	53,900
Maximum	1	7,300	10,200	13,700	53,900

The heat generation rate for any MOX fresh fuel is about four orders of magnitude, or more, greater than that from LEU fresh fuel. Using FG plutonium instead of WG plutonium causes the heat generation rate to increase by about another factor of 1.3. Using PG plutonium instead of FG plutonium causes the heat generation rate to increase by about another factor of 3.9. For reference, 1 metric ton of heavy metal of MOX fuel fabricated from WG plutonium will generate more than 100 watts of decay heat.

The heat is generated predominately by alpha decay of the heavy nuclides. The average alpha energy spectrum for the plutonium isotopes is greater than that for the uranium isotopes by about 25 percent. However, the primary reason heat generation is greater for plutonium is that its specific activity for alpha decay is four to five orders of magnitude larger than that for uranium. Table B–4 shows some specific decay parameters for MOX-relevant nuclides.

The gamma emission code GAMGEN (Gosnell 1990) can be used to determine the gamma emission rates for equal weights of various nuclides of uranium, plutonium, and americium. Shielding for LEU is not a significant problem as a function of decay time. Therefore, studying the gamma emission rate for each nuclide of interest relative to LEU gives a measure of how much more shielding may be required to adequately reduce radiation levels when that nuclide is present than for LEU. Table B–5 lists the gamma emission rates at 20 years of decay time for equal weights of each nuclide, relative to the LEU gamma emission rate at 20 years of decay time, for four energy ranges corresponding to different minimum gamma energies. Although gamma emission rates are not necessarily maximized at 20 years decay time, this decay time was chosen because it gives a better indication of the relation of the various nuclide emission rates relative to LEU with time. The maximum gamma energies for each nuclide are below 3.3 mega electron volts (MeV), and sometimes significantly below. The reason the gamma emission ratios are listed for several different energy ranges is to provide some indication of the energy distribution for the gammas of each nuclide as the minimum gamma energy increases, since more effective or greater amounts of shielding are required as gamma energy increases. This is facilitated by listing the average gamma energy for each nuclide for each energy range in the table. Each nuclide has a different average gamma energy for a given energy range because each has a unique gamma energy spectrum. When the average energy for a nuclide is close to the minimum energy for an energy range, this indicates that most gammas in that range have energies near to that of the minimum energy.

The nuclides plutonium-236 and uranium-232 have very large emission ratios because of the relatively short half-lives and 2.614 MeV gammas emitted after chain decaying to thallium-208. These gammas may require additional package shielding and can usually be tolerated at amounts no greater than about 10^{-4} weight percent of heavy metal nuclides. The nuclides uranium-236, americium-241, uranium-234, and neptunium-237 result from radioactive decay of plutonium-240, plutonium-241, plutonium-238, and americium-241, respectively. The nuclide uranium-233 is usually present in trace quantities.

In Table B–5 for the minimum gamma energies corresponding to 0.041 and 0.183 MeV, most of the nuclides have emission ratios greater than 1.00. The nuclides plutonium-238, plutonium-240, plutonium-241, plutonium-242, uranium-234, uranium-236, and americium-241 have a majority of gammas in the energy range between roughly 0.04 and 0.12 MeV, because their average energies for the first energy range are close to the minimum energy of 0.041 MeV. However, except for uranium-235, all nuclides have average energies greater than 0.28 MeV for the second energy range. Therefore, these nuclides have considerable gammas with energies that will require specific gamma shielding if present in sufficient quantities. This is reinforced by the emission ratios and average energies for the energy range with a minimum gamma energy of 0.498 MeV, particularly for the plutonium isotopes. For the energy range with a minimum gamma energy of 1.000 MeV, only plutonium-236 (except for trace nuclides) has high emission rates of very-high-energy gammas that may require substantial shielding if it is present in a significant quantity.

ORIGEN-ARP also gives the gamma emission rates for arbitrary compositions of plutonium with depleted uranium in MOX fresh fuel. Table B–6 lists the ratio of gamma emission rates for MOX fresh fuel relative to LEU fresh fuel using the composition weight percents for MOX fresh fuel fabricated from the various plutonium grades from Table 2 in ORIGEN-ARP. Table B–4b lists both rates for initial time and maximum rates after some decay time. The decay time at maximum gamma emission rates depends on the plutonium grade in question.

Table B–4 Specific decay parameters for MOX-relevant nuclides				
Radionuclide	**Half-life (years)**	**Decay energy (MeV/event)**	**Decay energy (watt-yr/mole)**	**Specific heat generation rate (watts/kg)**
^{233}U	1.60E+05	4.909	15,021	5.81E-01
^{235}U	7.10E+08	4.681	14,333	6.00E-05
^{238}U	4.50E+09	4.195	12,836	8.00E-06
^{238}Pu	8.78E+01	5.593	17,113	5.67E+02
^{239}Pu	2.41E+04	5.244	16,046	1.93E+00
^{240}Pu	6.54E+03	5.255	16,079	7.10E+00
^{241}Pu	1.44E+01	0.0205	62.7	1.25E+01
^{242}Pu	3.76E+05	4.983	15,246	1.16E-01
^{241}Am	4.32E+02	5.637	17,248	1.15E+02

Table B–5 Gamma emission rates relative to the LEU gamma emission rate and average gamma energies for equal weights of some nuclides of uranium, plutonium, neptunium, and americium at 20 years of decay time								
Select nuclides	**Gamma energies ≥0.041 MeV**		**Gamma energies ≥0.183 MeV**		**Gamma energies ≥0.498 MeV**		**Gamma energies ≥1.000 MeV**	
	Emission relative to LEU	**Average energy (MeV)**	**Emission relative to LEU**	**Average energy (MeV)**	**Emission relative to LEU**	**Average energy (MeV)**	**Emission relative to LEU**	**Average energy (MeV)**
^{236}Pu	2.73E+08	0.7929	4.46E+08	0.9927	2.90E+09	1.4300	2.26E+09	2.5212
^{238}Pu	5.33E+04	0.0624	1.37E+02	0.7497	1.31E+03	0.7906	7.71E+01	1.1753
^{239}Pu	2.89E+02	0.1173	7.08E+01	0.3883	8.39E+00	0.6968	1.06E-02	1.1750
^{240}Pu	9.05E+02	0.0600	1.66E+00	0.3941	5.97E+00	0.6831	4.05E-09	2.1790
^{241}Pu	5.71E+06	0.0544	4.74E+03	0.2805	2.64E+03	0.6771	8.49E-07	1.4577
^{242}Pu	1.32E+01	0.0613	3.94E-06	0.9783	3.75E-05	1.0389	3.75E-05	1.2507
^{232}U	2.73E+08	0.7930	4.46E+08	0.9927	2.91E+09	1.4300	2.26E+09	2.5212
^{233}U	2.62E+02	0.1801	1.88E+02	0.3549	8.32E+01	1.3620	1.30E+02	1.4607
^{234}U	7.58E+01	0.0789	2.21E-01	0.7588	1.39E+00	1.0282	1.05E+00	1.5553
^{235}U	1.75E+01	0.1901	2.24E+01	0.2402	7.27E-03	0.7422	1.49E-04	1.1750
^{236}U	4.76E-01	0.0723	1.52E-06	0.8876	1.05E-05	1.1865	5.49E-06	2.2074
^{238}U	3.12E-01	0.2289	1.09E-01	0.9783	1.04E+00	1.0389	1.04E+00	1.2507
LEU	1.00E+00	0.2017	1.00E+00	0.3177	1.00E+00	1.0388	1.00E+00	1.2507
^{237}Np	6.06E+03	0.2096	5.94E+03	0.3374	2.63E-04	1.3575	4.09E-04	1.4597
^{241}Am	9.09E+06	0.0543	1.85E+03	0.3905	4.21E+03	0.6771	4.23E-06	1.4586

The gamma emission rates include only gammas with energies equal to or greater than 100 kilo electron volts (keV). The assumption is that gammas with energies less than 100 keV will be absorbed by the normal packaging materials required to transport MOX fresh fuel contents, specifically the strong 59.5 keV gammas coming from any americium-241 produced through decay of plutonium-241. Note that MOX containing plutonium-236 at concentrations greater than about 10^{-4} wt% of total plutonium mass or significant americium-241 ingrowth may have larger gamma emission rates than are shown in Table B–6.

Table B–6 Ratio of gamma emission rate for gamma energies exceeding 100 keV for MOX fresh fuel composed of various grades of plutonium relative to LEU fresh fuel					
Decay time	**No plutonium**	**Pure ^{239}Pu**	**Weapons grade**	**Fuel grade**	**Power grade**
Initial	1.0	6.1	6.1	6.9	15.4
Maximum	1.0	6.1	6.1	7.2	83.5

The gamma emission rates for MOX fresh fuel from both WG and FG plutonium are less than an order of magnitude greater than those for LEU fresh fuel. The gamma emission rates for MOX fresh fuel from PG plutonium can be up to about two orders of magnitude greater than those for LEU fresh fuel, depending on the time since MOX fuel fabrication.

The neutron-emission code SOURCES (Wilson et al. 1999) can be used to determine the neutron-emission rates for spontaneous fission and alpha-induced neutrons for equal weights of various nuclides of uranium, plutonium, and americium. Table B–7 lists the neutron-emission rates for spontaneous fission and alpha-induced neutrons from oxygen-17 and oxygen-18, for equal weights of nuclides at the initial MOX fuel fabrication time relative to the LEU neutron-emission rate. Also listed in the table is the average neutron energy for each nuclide and each neutron-emission process.

On an equal weight basis, plutonium-238, plutonium-240, plutonium-242, and americium-241 are overwhelmingly the largest source for neutron emission for the nuclides listed in Table B–7. Most nuclides listed in the table have neutron-emission rates greater than LEU by one or more orders of magnitude. Table B–7 also shows that neutron emissions from uranium isotopes are insignificant relative to those from plutonium isotopes on an equal weight basis. The average neutron energies listed in Table B–7 are between about 1.7 MeV and 2.5 MeV. This means that the spectral energy distribution for neutrons plays a much smaller role than does the spectral energy distribution for gammas.

The neutron-emission code SOURCES can also be used to determine the neutron-emission rates for spontaneous fission and alpha-induced neutrons for arbitrary compositions of plutonium isotopes with depleted uranium in MOX fresh fuel. Table B–8 lists the ratio of neutron-emission rates for MOX fresh fuel relative to LEU fresh fuel using the composition weight percents for MOX fresh fuel fabricated from the various plutonium grades from Table B–2 in SOURCES. Note that MOX fresh fuel with significant americium-241 ingrowth (from plutonium-241 decay) can have significantly larger relative neutron-emission rates, as is shown in the last line of Table B–8.

Replacing 4 wt% uranium-235 with 4 wt% plutonium-239 increases the neutron-emission rate by a factor of about 24. Using WG plutonium instead of pure plutonium-239 causes the neutron-emission rate to increase by about another order of magnitude. Using FG plutonium instead of WG plutonium causes the neutron-emission rate to increase by about another factor of 2. Using PG plutonium instead of FG plutonium causes the neutron-emission rate to increase by about another factor of 3.

Plutonium-241 decays to americium-241 with a half-life of 14.35 years. Americium-241 is a stronger neutron source, so to get a bounding value for the expected increase in neutron-emission rate when plutonium-241 decays to americium-241, all plutonium-241 is replaced with

Table B–7 Neutron-emission rates relative to the LEU neutron-emission rate and average gamma energies for equal weights of some nuclides of uranium, plutonium, and americium for (α, n) with oxygen-17 and oxygen-18, spontaneous fission (SF), and the sum of all three (total) neutron-emission processes							
Select nuclides	**^{17}O (α, n) relative to LEU**	**Average energy (MeV)**	**^{18}O (α, n) relative to LEU**	**Average energy (MeV)**	**SF relative to LEU**	**Average energy (MeV)**	**Total relative to LEU**
^{238}Pu	1.03E+08	2.52	1.27E+08	2.37	1.98E+05	2.02	1.24E+06
^{239}Pu	2.86E+05	2.44	3.62E+05	2.25	1.67E+00	2.07	2.97E+03
^{240}Pu	1.06E+06	2.44	1.33E+06	2.25	7.84E+04	1.93	8.87E+04
^{241}Pu	9.42E+03	2.39	1.23E+04	2.19	3.77E+00	2.00	1.04E+02
^{242}Pu	1.49E+04	2.38	1.94E+04	2.19	1.31E+05	1.96	1.30E+05
^{233}U	3.50E+04	2.37	4.53E+04	2.17	6.23E-02	2.02	3.72E+02
^{235}U	5.96E+00	2.27	6.67E+00	2.07	2.29E-02	1.89	7.80E-02
^{236}U	1.87E+02	2.29	2.23E+02	2.09	4.19E-01	1.83	2.26E+00
^{238}U	7.93E-01	2.20	7.64E-01	1.97	1.04E+00	1.69	1.04E+00
LEU	1.00E+00	2.22	1.00E+00	2.00	1.00E+00	1.74	1.00E+00
^{241}Am	2.05E+07	2.51	2.53E+07	2.36	9.03E+01	2.15	2.09E+05

Table B–8 Ratio of neutron-emission rate for MOX fresh fuel composed of various grades of plutonium relative to LEU fresh fuel					
Nuclide composition	**No plutonium**	**Pure ^{239}Pu**	**Weapons grade**	**Fuel grade**	**Power grade**
Fresh fuel	1	24	243	506	1,686
^{241}Pu replaced by ^{241}Am	1	24	250	536	1,995

americium-241, and the neutron-emission rate is recalculated for each of these new artificial grades of plutonium.[1] The last row of Table B–8 lists the values obtained. This approach gives an indication of what decay time can do to neutron-emission rates. The effect on neutron-emission rate of plutonium-241 decay to americium-241 is expected to be rather small, except for MOX fresh fuel fabricated from PG plutonium, where it could increase by a factor of about 20 percent.

The uncertainties in the rates of heat generation, gamma emission, or neutron emission from analyses performed using radiation transport codes and cross section sets, such as those employed above, for MOX RAM packages should be comparable to those performed for packages containing LEU RAM for the purposes required for thermal and shielding reviews.

In summary, heat generation and neutron-emission rates increase significantly when MOX RAM replaces LEU RAM. The alpha-energy spectrum responsible for most heat generation is somewhat different for MOX RAM and LEU RAM, but that is not significant in relation to the difference in the magnitude of the heat-generation rates between them. The neutron energy spectra from MOX RAM and LEU RAM are also somewhat different, but, again, this is not

[1] Replacing plutonium-241 with americium-241 is bounding for a neutron shielding evaluation but not for a criticality evaluation

significant in relation to the difference in the magnitude of the neutron-emission rates between them. The gamma-emission rate increases between MOX RAM and LEU RAM are not as important so long as plutonium-236 is less than about 10^{-4} wt% of the heavy metal present in MOX RAM. Otherwise, the strong 2.614 MeV gamma from the chain decay of plutonium-236 to thallium-208 becomes an important source of gamma radiation that requires additional package shielding to shield against. However, the gamma energy spectra from MOX RAM and LEU RAM can be quite different depending on the nuclides present, and this can be significant from a shielding point of view.

References

Bowman, S.M., and L.C. Leal, "ORIGEN-ARP: Automatic Rapid Process for Spent Fuel Depletion, Decay, and Source Term Analysis," in *SCALE Version 4.4: A Modular Code System for Performing Standardized Computer Analyses for Licensing Evaluation*, Vol. 1, Part 2, "Control Modules," NUREG/CR-0200, Revision 6 (ORNL/NUREG/CSD-2/VI/R6), Oak Ridge National Laboratory, May 2000.

Gosnell, T.B., "Automated Calculation of Photon Source Emission from Arbitrary Mixtures of Naturally Radioactive Nuclides," *Nuclear Instruments and Methods in Physics Research Section A*, 299(1–3): 682–686 (1990).

U.S. Department of Energy, "Stabilization, Packaging, and Storage of Plutonium-Bearing Materials," DOE-STD-3013-2012, Washington, DC, March 2012.

Wilson, W.B., et al., "SOURCES 4A: A Code for Calculating (α, n), Spontaneous Fission, and Delayed Neutron Sources and Spectra," LA-13639-MS, Los Alamos National Laboratory, Los Alamos, NM, September 1999.

APPENDIX C DIFFERENCES BETWEEN THERMAL AND RADIATION PROPERTIES OF MIXED OXIDE AND LOW-ENRICHED URANIUM SPENT NUCLEAR FUEL

This appendix reviews the expected differences between thermal and radiation properties of mixed oxide (MOX) and low-enriched uranium (LEU) spent nuclear fuel (SNF). Limited experimental information is available for MOX SNF, so determining what to expect from various grades of plutonium (see below), assembly types, fuel pellet types, reactor categories, and amount of burnup is determined solely from performing source term calculations. While only limited studies have been performed to understand what might be expected from these types of variations, educated estimates for these differences are attempted here and noted in the text or in footnotes. MOX SNF comes from MOX fresh fuel that has been irradiated in a thermal reactor. Appendix B to this SRP provides information regarding the compositions of MOX fresh fuel (see pages B-1 and B-2).

Oak Ridge National Laboratory (ORNL) conducted a detailed study of the rates of heat generation, gamma emission, and neutron emission due to decay for MOX fuel irradiated in various reactors. The following four ORNL reports present the results for SNF from the reactors stated in the reports' titles:

(1) "Characteristics of Spent Fuel from Plutonium Disposition Reactors, Vol. 1: The Combustion Engineering [CE] System 80+ Pressurized-Water-Reactor Design" (Murphy 1996)—this report gives the results for both MOX fuel and LEU fuel; the assessment given for MOX fuel assemblies and LEU fuel assemblies were used in this appendix for generic fuel comparisons for pressurized-water reactors (PWRs)

(2) "Characteristics of Spent Fuel from Plutonium Disposition Reactors, Volume 2: A General Electric [GE] Boiling-Water-Reactor Design" (Ryman and Hermann 1998)—this report gives the results for both MOX fuel and LEU fuel; the assessment given for MOX and LEU fuel assemblies were used in this appendix for generic fuel comparisons for boiling-water reactors (BWRs)

(3) "Characteristics of Spent Fuel from Plutonium Disposition Reactors, Vol. 3: A Westinghouse Pressurized-Water Reactor Design" (Murphy 1997)

(4) "Characteristics of Spent Fuel from Plutonium Disposition Reactors, Vol. 4: Westinghouse Pressurized-Water-Reactor Fuel Cycle without Integral Absorber" (Murphy 1998)

For each reactor type, it is possible to (i) select from a number of different fuel assemblies, (ii) for MOX, choose different arrangements of fuel pins having different compositions of plutonium, uranium, and burnable absorbers, and (iii) use annular fuel pellets rather than cylindrical fuel pellets. All these changes can affect the total burnup and the amount of heavy metal contained in the MOX fuel or LEU fuel assemblies. The ORNL studies focused on identifying differences in spent fuel characteristics that are significantly greater than typical burnup-related variations. It is expected that increasing the burnup of both MOX fuel and LEU fuel assemblies would result in larger differences in spent fuel characteristics. The first two ORNL reports in the list above (Volumes 1 and 2 of the spent fuel studies) were chosen for this study because they consider typical differences in SNF characteristics, and they are the only

ones available that compare LEU SNF to MOX SNF. However, they do not necessarily represent analyses that give bounding differences in SNF characteristics.

The ORNL studies used weapons grade (WG) plutonium for their MOX fuel rods. The 3013 Standard (DOE, 2012) gives the weight percent (wt%) for various isotopes in various grades of plutonium (see Table B–6 of the 3013 Standard). The ORNL studies used weight percents of various plutonium isotopes consistent with those for WG plutonium listed in Table B–1 of Appendix B to this SRP. Details of the fuel assemblies used in the ORNL studies are presented below.

A discussion of the characteristics of the Combustion Engineering System 80+ PWR (CE-PWR) MOX SNF and PWR LEU SNF fuel assemblies is presented below. For purposes of comparison, these same data are also summarized in Table C–1. Table C–2 shows the irradiation characteristics of the CE System 80+ fuel assemblies. Table C–3 shows a comparison of fuel assembly characteristic of the GE BWR MOX SNF and BWR LEU SNF fuel assemblies. Table C–4 shows the irradiation characteristics of the GE BWR fuel assemblies.

The MOX fuel for the CE-PWR irradiation contained 6.7 wt% WG plutonium and 91.3 wt% depleted uranium,[1] together with 1.9 wt% of erbium, in the form of erbium oxide (Er_2O_3), as components of the heavy metal. The core also contained Al_2O_3-B_4C burnable poison rods (BPRs). The assembly studied, known as the shim assembly, contained a 16×16 square array that was 20.25 centimeters (cm) on a side, with a fuel-rod pitch of 1.29 cm. The assembly studied contained 256 fuel rod positions with a total of 224 fuel rods, four control rods, one instrument tube, and 12 BPRs. The four control rods and single instrument tube displaced the equivalent of 20 fuel rod positions. The assembly contained 0.419 metric tons of heavy metal (MTHM) in the 224 fuel rods, not counting the 1.9 wt% of erbium. The burnup criterion used was 28.9 MW/MTHM, and the assembly was burned to 17,681.8 megawatt days (MWd), in four cycles of 365 days each. A 30-day downtime was allowed between cycles. This represents an assembly power level of 12.34 megawatts (MW), and a burnup of 42.2 gigawatt days per metric ton of heavy metal (GWd/MTHM) (see Table C–1).

The LEU fuel for the CE-PWR irradiation contained 4.2 wt% uranium-235 and 95.8 wt% uranium-238, as components of the heavy metal, in 224 identical fuel rods. In addition, 12 fuel rods contained 4.1 wt% uranium-235 and 94.0 wt% uranium-238, together with 1.9 wt% of erbium, in the form of Er_2O_3, as components of the heavy metal. These 12 fuel rods were located in the same positions where the 12 BPRs were located in the MOX case discussed above. The shim assembly studied contained the same 16×16 square array that was 20.25 cm on a side, with a fuel-rod pitch of 1.29 cm. The assembly studied also contained the same four equivalent control rods and one equivalent instrument tube as the MOX assembly. The assembly contained 0.424 MTHM in the 236 fuel rods, not counting the same 1.9 wt% of erbium. The burnup criterion used was 29.1 MW/MTHM, and the assembly was burned to 20,267.2 MWd, in three cycles of 18 months each. A comparable 30-day downtime was allowed between cycles. This represents an assembly power level of 12.34 MW, which was the same as for the MOX fuel assembly. The burnup was 47.8 GWd/MTHM (see Table C–2).

[1]Depleted uranium is 99.8 wt% uranium-238 and 0.2 wt% uranium-235.

Table C–1 Comparison of fuel-assembly characteristics for the combustion engineering system 80+ pressurized-water-reactor SNF		
Characteristic	**CE-PWR MOX**	**CE-PWR LEU**
Weight heavy metal (MT)	0.419	0.424
wt% WG plutonium	6.7	NA
wt% uranium	91.3 [a]	100 (4.2 ^{235}U)
wt% erbium (Er_2O_3)	1.9	1.9
Burnable poison rod (BPR) material	Al_2O_3-B_4C	NA
Array size	16×16 (20.25 on side)	16×16 (20.25 on side)
Fuel rod pitch (cm)	1.29	1.29
Number of rods	256	256
Fuel rods	224	236
Control rods	4	4 (equivalent)
Instrument tubes	1	1
BPRs	12	NA
Burnup criterion (MW/MTHM)	28.9	29.1
Burnup (MWd)	17,681.8	20,267.2
Cycles/length	4/365 days each	3/18 months each
Assembly power level (MW)	12.34	12.34
Representative burnup (GWd/MTHM)	42.2	47.8
[a]Depleted uranium is 99.8 wt% uranium-238 and 0.2 wt% uranium-235.		

Table C–2 Irradiation characteristics of Combustion engineering System 80+ pressurized-water-reactor SNF			
Fuel Type	**MTHM**	**Irradiation (days)**	**Burnup (GWd/MTHM)**
MOX	0.419	1,460	42.2
LEU	0.424	1,620	47.8

The MOX fuel for the GE-BWR-5 [2] irradiation contained 2.97 wt% WG plutonium, 96.50 wt% depleted uranium, and 0.53 wt% gadolinium, as components of the heavy metal. The assembly studied contained an 8×8 array that was 15.24 cm on a side, with a fuel rod pitch of 4.129 cm. The assembly contained 64 fuel rod positions, with a total of 60 fuel rods and one guide tube. Seven different types of fuel rods were used, each having a different amount of plutonium, uranium, and gadolinium. The guide tube displaced the equivalent of four fuel rod positions. The assembly contained 0.179 MTHM in the 60 fuel rods, not counting the 0.53 wt% of gadolinium. The burnup criterion used was 25.5 MW/MTHM, and the assembly was burned to 6,715.4 MWd, in four cycles of 340-day uptime, and a 113-day downtime, each with an additional final 113-day uptime. This amounted to an assembly power level of 4.610 MW and a burnup of 37.6 GWd/MTHM (see Table C–3).

The LEU fuel for the GE-BWR-5 irradiation contained 3.25 wt% uranium-235 and 96.75 wt% uranium-238, as components of the heavy metal, in 56 identical fuel rods.

[2] The report actually refers to the GE-BWR-5 but used some features of the GE-BWR-9, such as the four water rods.

Table C–3 Comparison of fuel assembly characteristic for the General Electric boiling-water-reactor SNF		
Characteristics	**GE-BWR MOX**	**GE-BWR LEU**
Weight heavy metal (MT)	0.179	0.183
wt% WG plutonium	2.97	NA
wt% uranium	96.50[a]	100 (3.25 ^{235}U)
wt% gadolinium (Gd_2O_3)	0.53	2.17
Array size	8×8 (15.24 cm on side)	8×8 (15.24 cm on side)
Fuel rod pitch (cm)	4.129	4.129
Number of rods	64	64
Fuel rods	60	60
Guide tube	1	1
Burnup criterion (MW/MTHM)	25.5	25.5
Burnup (MWd)	6,715.4	6,880.8
Cycles/length	4/340-day uptime, 113-day downtime, with an additional 113-day uptime, each	4/340-day uptime, 113-day downtime, with an additional 113-day uptime, each
Assembly power level (MW)	4.610	4.724
Representative burnup (GWd/MTHM)	37.6	37.6
[a]Depleted uranium is 99.8 wt% uranium-238 and 0.2 wt% uranium-235.		

In addition, four fuel rods with burnable absorbers were used, containing 2.17 wt% of Gd_2O_3. The assembly studied contained the same 8×8 array that was 15.24 cm on a side, with a fuel rod pitch of 4.129 cm. The assembly studied contained a total of 60 fuel rods and one guide tube. The assembly contained 0.183 MTHM in the 60 fuel rods, not counting the 2.17 wt% of gadolinium. The burnup criterion used was 25.5 MW/MTHM, which was the same as for the MOX fuel assembly. The assembly was burned to 6,880.8 MWd, in four cycles of 340-day uptime, and a 113-day downtime, each with an additional final 113-day uptime. This amounted to an assembly power level of 4.724 MW, and an identical burnup of 37.6 GWd/MTHM (see Table C–4).

The ratios for heat generation rates, photon emission rates, and neutron emission rates vs. time-from-discharge for the CE-PWR fuel assemblies are shown below in Figures C–1, C–2, and C–3, respectively. The data presented in these figures were calculated by taking the calculated rates of heat generation, gamma emission, and neutron emission due to decay for the MOX fuel assembly irradiation and dividing them by the similar quantities for the LEU fuel assembly. The differences in calculated decay rates for these quantities for the MOX fuel assembly irradiation and the LEU fuel assembly irradiation in a PWR are attributed primarily to differences in fuel material for the purposes of this study.

The ratios for heat generation rates, photon emission rates, and neutron emission rates vs. time-from-discharge for the GE BWR fuel assemblies are also shown in Figures C–1, C–2, and C–3, respectively. Again, the data presented in these figures were calculated by taking the calculated rates of heat generation, gamma emission, and neutron emission due to decay for the MOX fuel assembly irradiation and dividing these by the similar quantities for the LEU fuel assembly. And, again, the differences in calculated decay rates for these quantities for the MOX fuel assembly irradiation and the LEU fuel assembly irradiation in a BWR are attributed primarily to differences in fuel material for the purposes of this study.

Table C–4 Irradiation characteristics of General Electric boiling-water-reactor SNF			
Fuel Type	**MTHM**	**Irradiation (days)**	**Burnup (GWd/MTHM)**
MOX	0.1786	1,473	37.6
LEU	0.183	1,473	37.6

Figure C–1 for heat generation rate shows that the heat rate generated by the MOX SNF and LEU SNF is within about 15 percent of each other over a period of 10 years after discharge. Figure C–2 for decay gamma emission rate, where only gamma energies greater than 250 kilo electron volts (keV) are included in the curves,[3] shows that the decay gamma emission rate generated by the MOX SNF and LEU SNF are also within about 15 percent of each other over a period of 10 years after discharge. Figure C–3 for decay neutron emission rate shows that the decay neutron emission rate generated by the MOX SNF and LEU SNF differs by up to about a factor of 2.5 over a period of 10 years after discharge.[4] These results are based on a single assembly type and fuel composition for each of the two categories of reactors studied. WG plutonium was used for both studies.

Most of the benchmarking that ORNL has investigated for decay heat and radiation source terms has involved LEU fuel. Limited MOX benchmarks indicate that the predicted actinide concentrations, particularly the fissile plutonium isotopes and many fission products, are not nearly as accurate for MOX fuels as previously observed for commercial LEU fuels. For example, plutonium-239 tends to be over-predicted by about 10 to 50 percent, and americium isotopes are also significantly over-predicted by about 25 percent. The reasons for this are not entirely clear, but it could be due to larger uncertainties in the plutonium and other higher actinide cross sections (compared to uranium) that are more important in MOX fuel, and/or the more heterogeneous MOX cores (i.e., when MOX assemblies with different heavy metal compositions are irradiated together with LEU assemblies). It is difficult to know the accuracy of decay heat predictions based on these results, but in general, it is expected that at longer cooling times where actinides dominate, code predictions may overestimate decay heat by potentially 10–20 percent or more for MOX SNF based on the calculated plutonium and americium nuclide inventories. However, several dominant decay heat nuclides important at shorter cooling times are significantly under-predicted (Murphy and Primm 2000).

The accuracy of MOX decay heat calculations would apparently be much lower than for LEU fuels, but it may be conservative for longer cooling times and nonconservative for short cooling times. For neutron source terms, comparisons with the limited benchmark data indicate that SCALE (ORNL, 1995) predictions are in very good agreement for MOX fuel in a PWR but are over-predicted (~20 percent) for MOX fuel in a BWR (Gauld 2002). Uncertainties in the computational predictions by the amounts estimated above (10–20 percent) support the differences in the values shown in Figures C–1 through C–3.

---

3 The shielding associated with SNF packagings is expected to absorb essentially all gammas with energies less than 250 keV.

4 The curves for each of the figures are based on different fuels and different burnups. While these differences affect the curves shown in Figures C–1 and C–2, the effects are more noticeable in Figure C–3. This is due to the greater sensitivity of the neutron source to differences between the MOX and LEU assemblies and their irradiation for the two analyzed PWR and BWR assembly types. Thus, to understand the figures, particularly Figure C–3, the differences in the fuels and their burnups, including the influence of the fuel property differences to either magnify or minimize reactor operation characteristics (e.g., void fraction in a BWR), need to be considered.

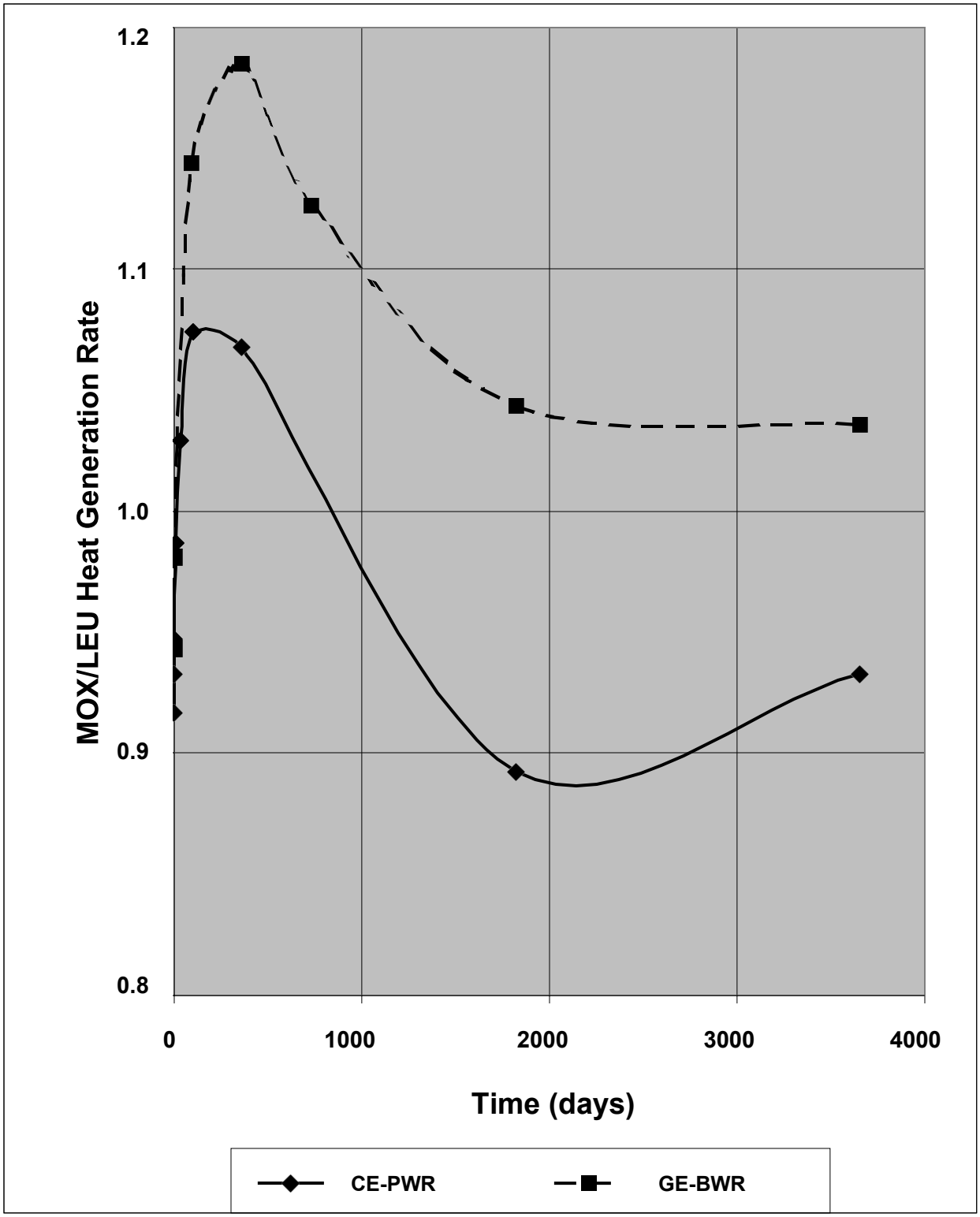

Figure C–1 Ratio of MOX to LEU decay heat generation rate vs. time-from-discharge for Combustion Engineering System 80+ Pressurized Water Reactor (CE-PWR) and General Electric Boiling-Water Reactor Model 5 (GE-BWR-5)

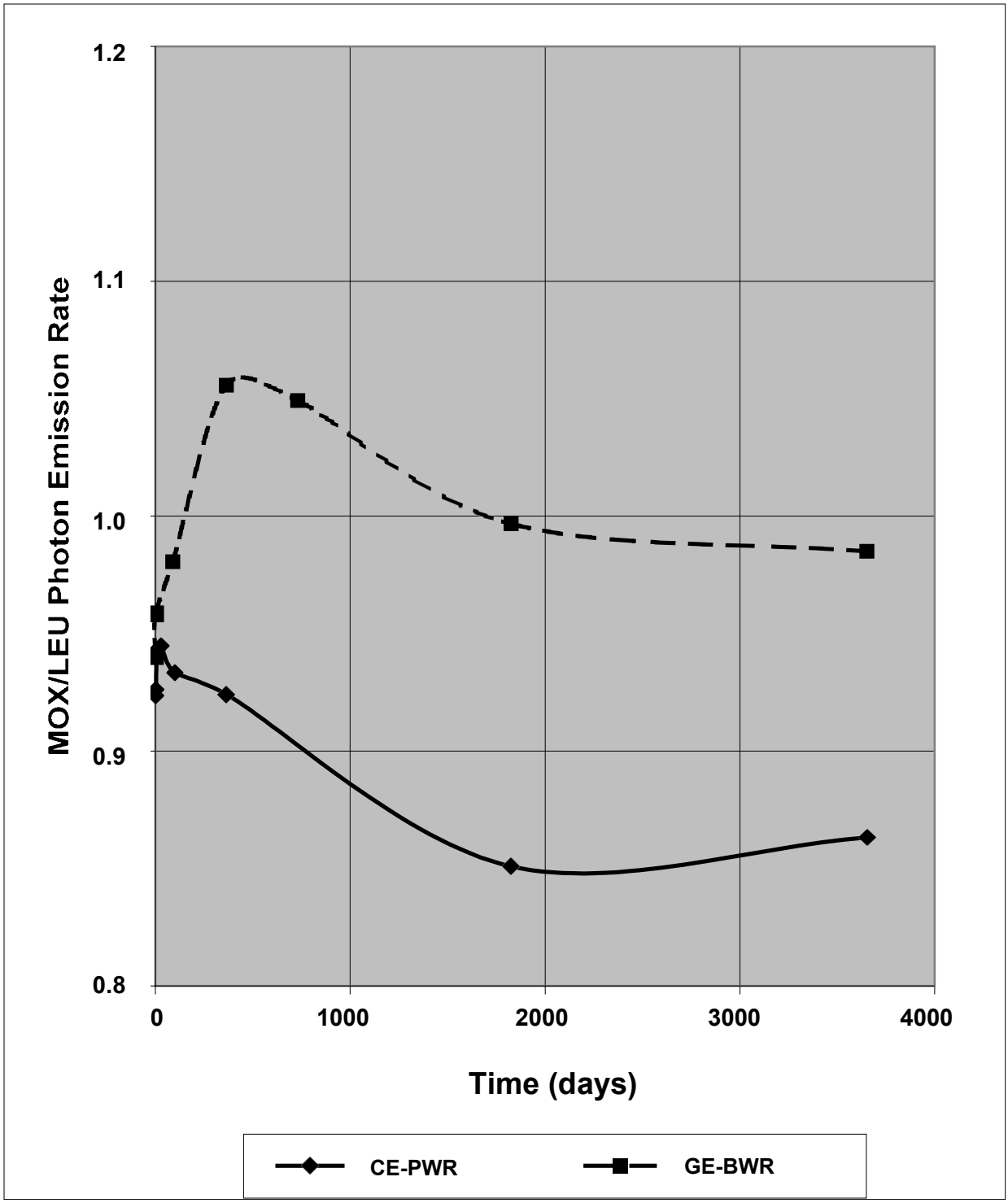

Figure C–2 Ratio of MOX to LEU decay gamma emission rate vs. time-from-discharge for Combustion Engineering System 80+ Pressurized-Water Reactor (CE-PWR) and General Electric Boiling-Water Reactor Model 5 (GE-BWR)

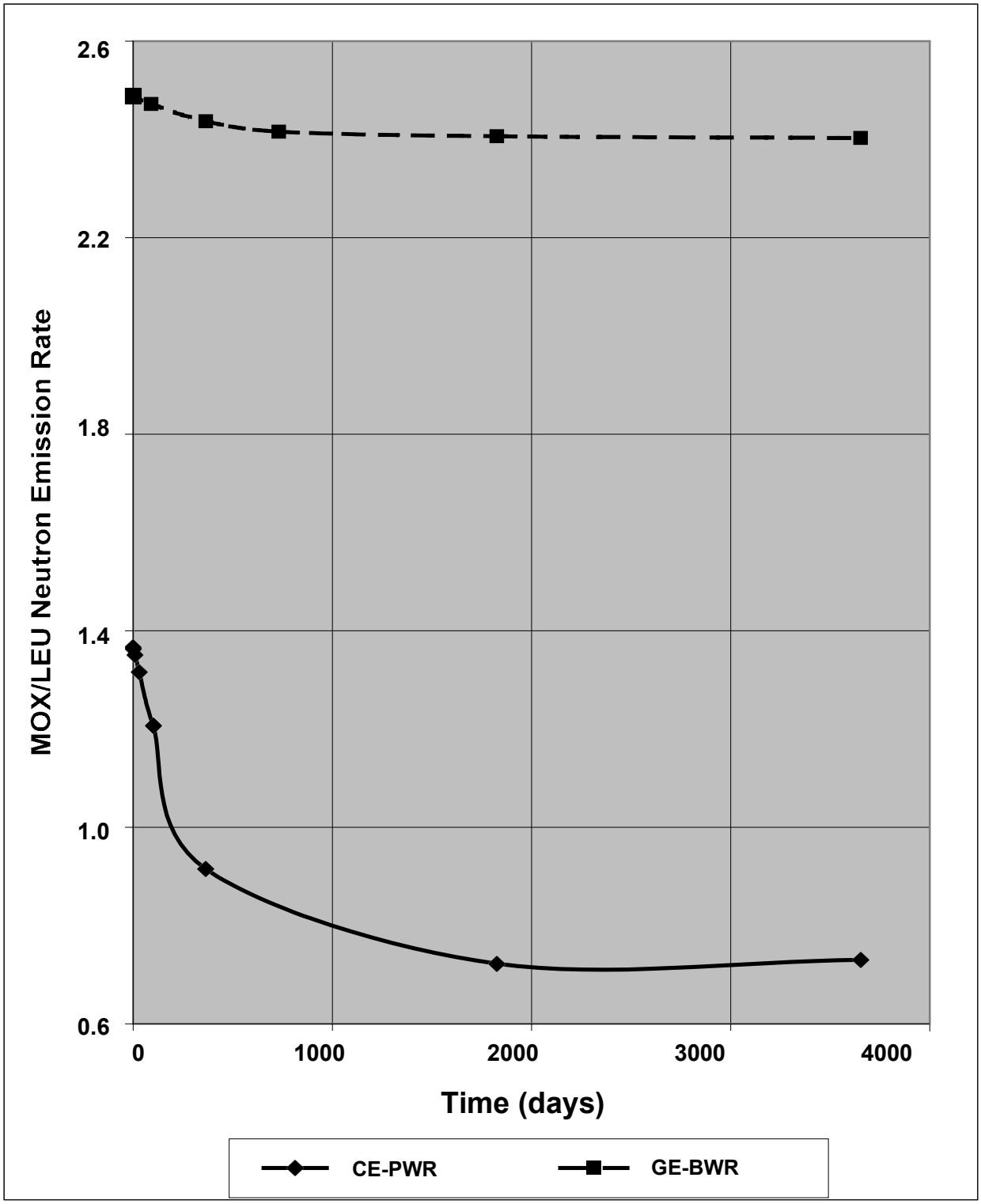

Figure C–3 Ratio of MOX to LEU decay neutron emission rate vs. time-from-discharge for Combustion Engineering System 80+ Pressurized-Water Reactor (CE-PWR) and General Electric Boiling-Water Reactor Model 5 (GE-BWR)

The use of ENDF/B-IV and earlier cross sections have the effect of over-predicting the multiplication coefficient, k_{eff}, for materials containing plutonium. The use of newer, and presumably more accurate, ENDF/B-V and VI cross sections do a better job of predicting k_{eff}. However, the effect of newer cross sections will not necessarily be less conservative for calculating decay heat and radiation source terms when compared to the earlier ones. The much larger isotopic biases observed for MOX fuels in limited benchmark studies are likely to translate into higher uncertainties (biases) in aggregate fuel properties; they may translate to a lesser extent than the isotopic analyses might suggest due to cancellation of errors [e.g., bulk fuel properties are generally predicted better than individual isotopic analyses (Gauld 2002)].

Are the studies shown in Figures C-1 through C-3 representative of other assembly types, fuel pellet types, reactor categories, and burnups that might be considered? The decay heat emission rate and gamma emission rate using WG plutonium are expected to be similar. That is, quantities of heat emission rate and gamma emission rate for MOX SNF and LEU SNF should be roughly within the same envelope determined in the ORNL studies (i.e., within about 40 percent of each other over a period of 10 years after discharge, including benchmark and cross section uncertainties).[5] Using WG plutonium, we estimate (since no systematic studies have been performed as yet) that the decay neutron emission rate for MOX SNF may be up to a factor of 4 larger than that for LEU SNF over a period of 10 years after discharge, taking into account benchmark and cross section uncertainties.[6] The uncertainties are not expected to apply to shorter cooling times, relative to a discharge time of 10 years. The differences, as always, need to be confirmed by independent verification using established radiation transport codes and cross-section sets.

Will these relationships change when studies are made with MOX fuel produced with fuel grade or power grade plutonium? The answers for heat generation and gamma emission rates due to decay are expected to be similar but differ by a larger amount. The use of plutonium containing less plutonium-239 and more of other plutonium isotopes means larger masses of plutonium might be required in the fuel rods, which increases the amount of other isotopes of plutonium in MOX fresh fuel. Irradiation of fuel rods containing more of the other plutonium isotopes is expected to generate a greater heat generation rate and to emit a greater decay gamma emission rate than the WG plutonium used in the MOX fuel studied in the ORNL reports. The additional amount of other plutonium isotopes is expected to generate greater heat generation and gamma emission rates due to decay after irradiation. The heat generation and gamma emission rates due to decay for MOX SNF and LEU SNF might be within about 100 percent of one another over a period of 10 years after discharge, including benchmark and cross-section uncertainties, although without systematic studies this is just an estimate. The uncertainties are not expected to apply to short cooling times relative to a time after discharge of 10 years.

For decay neutron emission rates, it may be more difficult to determine the amount of increase that might be expected with MOX fuel produced with another grade of plutonium, since no systematic studies have been performed as yet. The decay neutron emission rates from other grades of plutonium can be two to four times larger than those for WG plutonium. Again, the use of plutonium containing less plutonium-239 and more of other plutonium isotopes means larger masses of plutonium might be required in the fuel rods, which increases the amount of the other isotopes of plutonium in MOX fresh fuel. Irradiation of fuel rods containing more of

---

[5] This is just an opinion, since the uncertainty may be larger than the increase estimated by 20 percent × 2 = 40 percent.

[6] This is also just an opinion, since the uncertainty may be larger than the increase estimated by $2.5 \times 1.5 \cong 4$ factor.

other plutonium isotopes is expected to generate a greater decay neutron emission rate than the WG plutonium used in the MOX fuel studied in the ORNL reports. MOX fuel produced with power grade plutonium has considerably more plutonium-241 present in the fresh fuel. Americium-241 is produced by beta decay of plutonium-241 with a half-life of 14.4 years. For times after discharge less than a year, neutrons from curium-242 and curium-244 can predominate after discharge for several months or so, after which the neutrons from curium-242 decrease significantly. Neutrons from plutonium-240 and americium-241 may also become significant. The neutron emission rates for MOX SNF and LEU SNF should be within an order of magnitude of one another over a period of 10 years after discharge, including benchmark and cross-section uncertainties, although without systematic studies this is just an estimate. The uncertainties are not expected to apply to short cooling times relative to a time after discharge of 10 years. The differences, as always, need to be confirmed by independent verification using established radiation transport codes.

References

Gauld, Ian C., personal communication to Stewart C. Keeton, Physicist in Radioactive Material Transportation and Storage Projects, Fission Energy and Systems Safety Program, Lawrence Livermore National Laboratory, Livermore, CA, Nuclear Engineering Applications Engineer in Computational Physics and Engineering Division, Oak Ridge National Laboratory, Oak Ridge, Tennessee, August and December 2001 and January 2002.

Murphy, B.D., “Characteristics of Spent Fuel from Plutonium Disposition Reactors, Vol. 1: The Combustion Engineering System 80+ Pressurized-Water-Reactor Design,” ORNL/TM-13170/V1, Oak Ridge National Laboratory, June 1996.

Murphy, B.D., “Characteristics of Spent Fuel from Plutonium Disposition Reactors, Vol. 3: A Westinghouse Pressurized-Water Reactor Design,” ORNL/TM-13170/V3, Oak Ridge National Laboratory, July 1997.

Murphy, B.D., “Characteristics of Spent Fuel from Plutonium Disposition Reactors, Vol. 4: Westinghouse Pressurized-Water-Reactor Fuel Cycle without Integral Absorber,” ORNL/TM-13170/V4, Oak Ridge National Laboratory, April 1998.

Murphy, B.D., and R.T. Primm, III, “Prediction of Spent MOX and LEU Fuel Composition and Comparison with Measurements,” *Proceedings of the 2000 ANS International Topical Meeting on Advances in Reactor Physics and Mathematics and Computation into the Next Millennium*, PHYSOR2000, Pittsburgh, PA, May 7–11, 2000.

Oak Ridge National Laboratory, “SCALE: A Modular Code System for Performing Standardized Analyses for Licensing Evaluation,” Vols. 1, 2, and 3, NUREG/CR-0200, Rev. 4 (ORNL/NUREG/CSD-2/R4), October 1995. Various versions of SCALE are available.

Ryman, J.C., and O.C. Hermann, “Characteristics of Spent Fuel from Plutonium Disposition Reactors, Vol. 2: A General Electric Boiling-Water Reactor Design,” ORNL/TM-13170/V2, Oak Ridge National Laboratory, April 1998.

U.S. Department of Energy, “Stabilization, Packaging, and Storage of Plutonium-Bearing Materials,” DOE-STD-3013-2012, Washington DC, March 2012.

APPENDIX D BENCHMARK CONSIDERATIONS FOR MIXED OXIDE RADIOACTIVE MATERIALS AND SPENT NUCLEAR FUEL

D.1 Experimental Benchmarks

The information and guidance in this appendix applies to both mixed oxide (MOX) radioactive materials and spent nuclear fuel (SNF) packages. This appendix does not address considerations for burnup credit for commercial MOX SNF, whether irradiated in a pressurized-water reactor or a boiling-water reactor; the considerations are for analyses that assume the MOX fuel is unirradiated. Benchmarking for any commercial MOX SNF would need to address additional considerations, such as those indicated in the discussion about MOX burnup credit in Section 6.4.7 of this SRP.

Substantial guidance on how to select an appropriate set of criticality benchmark experiments for low-enriched uranium (LEU) fissile systems is given in NUREG/CR-5661, "Recommendations for Preparing the Criticality Safety Evaluation of Transportation Packages," issued April 1997 (Dyer and Parks 1997), and in NUREG/CR-6361, "Criticality Benchmark Guide for Light-Water-Reactor Fuel in Transportation and Storage Packages," issued March 1997 (Lichtenwalter et al. 1997). Considerably fewer benchmark experiments exist for MOX than for LEU. As a consequence, the guidance provided in NUREG/CR-5661 and NUREG/CR-6361 cannot be applied directly to the evaluation of MOX fissile systems. The benchmarks needed for the criticality analyses of MOX packages are in the thermal energy range. This condition results because, for essentially all types of MOX, the most reactive configuration is a flooded containment.

As an alternative, the 2001 edition of the "International Handbook of Evaluated Criticality Safety Benchmark Experiments" (IHECSBE) has 11 evaluated thermal-energy studies involving MOX fuel pins in various lattice experiments and five evaluated thermal-energy studies involving MOX liquids in tank experiments (NEA, 2001). These can be divided into 18 sets of experiments involving different fissile oxide compositions and configurations in lattices and 13 sets of experiments involving different liquid fissile nitrate compositions and configurations in tanks. The total number of essentially different experiments is 131. Since the 2001 edition, an additional four evaluated thermal-energy studies involving MOX fuel pins and an additional four evaluated thermal-energy studies involving MOX liquids have been added to the IHECSBE (NEA, 2014) that include experiments evaluated to be acceptable to use as benchmarks. Other benchmark experiments are available throughout the world but are not as readily available. The vast majority have not been rigorously evaluated in the manner of those found in the IHECSBE and are consequently of limited use for benchmark criticality analyses for MOX packages. More evaluated MOX thermal benchmarks may be included in future editions of the IHECSBE.

The 18 sets of experiments involving fissile oxides in lattices and 13 sets of experiments involving fissile nitrate liquids in tanks from the 2001 edition of the IHECSBE have been organized and shown in Tables D–1 through D–5. The various tables are separated on two features. The first is between lattice and tank experiments, and the second is on weight percent of plutonium to total plutonium plus uranium (Pu/(Pu+U). Table D–1 has lattice experiments with Pu/(Pu+U) to 5 percent. Table D–2 has lattice experiments with Pu/(Pu+U) from 5 percent to 15 percent. Table D–3 has lattice experiments with Pu/(Pu+U) greater than 15 percent. Table D–4 has tank experiments with Pu/(Pu+U) to 31 percent (there are no experiments with Pu/(Pu+U) less than 22 percent). Table D–5 has tank experiments with Pu/(Pu+U) greater than

31 percent. Lists of meaningful, experimental characteristics are recorded for each set of experiments together with characteristics of their corresponding computational evaluations.

Experimental plutonium benchmarks should also be taken into account as part of the initial set of benchmark experiments to be considered for a MOX package application. About four times as many thermal-plutonium-tank-liquid benchmarks exist in the IHECSBE as thermal-MOX-tank-liquid benchmarks. However, fewer thermal-plutonium-lattice benchmarks exist in the IHECSBE than thermal-MOX-lattice benchmarks.

Also, there is a set of 156 configurations known as the French Haut Taux de Combustion (HTC) experiments. The descriptions of these experiments are provided in the four reports by Fernex listed in Section D3.0 and are considered commercial proprietary. Note that these experiments were set up to simulate the isotopic compositions of irradiated LEU fuel; so, the compositions will not be the same as for MOX fuel and will include other radionuclides that are not present in MOX fuel. Thus, use of the HTC experiments requires appropriate consideration of the differences between the HTC compositions and those of MOX fuel, whether irradiated and unirradiated. An evaluation of the HTC experiment data is described in NUREG/CR-6979, "Evaluation of the French Haut Taux de Combustion (HTC) Critical Experiment Data," issued September 2008, though this evaluation was done for the purpose of using the data to benchmark burnup credit analyses for LEU SNF.

D.2 Summary of Bias and Uncertainty Evaluation

There are two measures of the accuracy of an experiment and its associated calculation. The first measure is the effective bias (Eff-Bias) between calculation and benchmark experiment. The multiplication coefficient for a fissile system is designated as k_{eff}. Designate the calculated k_{eff} for the benchmark experiment as k_{calc} and the benchmark experimental k_{eff} as k_{exp}. If the calculational bias, β, is defined as $\beta = k_{calc} - k_{exp}$, then a quantity Δk can be defined as follows:

$$\Delta k = \begin{pmatrix} \beta \; if \; k_{calc} \leq k_{exp} \\ 0 \; if \; k_{calc} > k_{exp} \end{pmatrix} \qquad \text{(D-1)}$$

or a given experimental benchmark set, Δk_{max} is chosen as the largest absolute value of the Δk given by Equation D-1 for all experiments in the set. The 95 percent confidence limit of k_{calc} is k_{calc} plus twice the calculated standard deviation, which is designated by 2σ. The Eff-Bias value is then given by the following:

$$\text{Eff-Bias} = \Delta k_{max} - 2\sigma \qquad \text{(D-2)}$$

Eff-Bias, as defined here, is always *less* than zero. If k_{calc} is greater than k_{exp} for all experiments in a set, the Eff-Bias value is just the negative of twice the calculated standard deviation.

The second measure is the total experimental uncertainty (Exp-Uncer) that was determined by the evaluator after assessing all sources of uncertainty for the experiments in a set.[1] A worst-case difference between k_{calc} and k_{exp} can be assigned as the difference of the total experimental uncertainty and the effective bias (Exp-Uncer - Eff-Bias) for the experimental set in question. This worst-case difference (WCD), as defined here, is always *greater* than zero. It represents the upper limit of the inherent uncertainties in the ability of the computer code,

[1] The evaluator included sources of experimental bias or error in each k_{exp}. This does not represent an uncertainty and so is not included in the value for total experimental uncertainty.

together with the cross-section set used, to accurately determine the k_{eff} of a critical benchmark experiment. Therefore, a bounding multiplication coefficient, k_{safe}, at the 95 percent confidence limit, can be chosen to be equal to 0.95 minus WCD, where an administrative margin of safety of 0.05 has been included.[2]

Values for the variable WCD for each experimental set vary between 0.0071 to 0.0192 (0.71 percent to 1.92 percent), 0.0043 to 0.0328 (0.43 percent to 3.28 percent), 0.0023 to 0.0138 (0.23 percent to 1.38 percent), 0.0044 to 0.0180 (0.44 percent to 1.80 percent), and 0.0044 to 0.0150 (0.44 percent to 1.50 percent) for the experimental sets in Tables D–1, D–2, D–3, D–4, and D–5, respectively. No particular correlation seems to exist between WCD and the lattice configuration or pitch. Neither does there seem to be a correlation with plutonium composition type. The plutonium composition types are given in Table B–1 of Appendix B to this SRP and are designated as weapons grade (WG), fuel grade (FG), and power grade (PG).

The maximum value for WCD found in the five tables is 0.0328, or 3.28 percent in k_{eff}. How accurately a criticality computer code can predict the critical value for a criticality experiment depends on the methodology employed by the code and the cross-section set used, together with the detail to which the experimental system is modeled in the input to the computer code. In addition, the basic experimental uncertainty limits the ultimate prediction accuracy possible. Of particular importance is the cross-section set. Values for WCD in the five tables that are significantly less than 0.0100 are due to the fact that k_{calc} is greater than k_{exp}. Therefore, the value for Eff-Bias, in that case, is just the negative of twice the calculated standard deviation, which is approximately 0.0020. The cross-section sets used in the analyses represented in the tables over-predict plutonium reactivity, and this represents some of the reason for the over-prediction for k_{calc} for these experiments. Values for k_{safe} are not expected to be much above 0.93, except when it can be demonstrated that the criticality code and cross section set overestimate the reactivity of the MOX contents.

Analyzing an acceptable number of MOX benchmarks is the preferred way to obtain a bias value for the MOX contents of a package. With the relatively limited number of MOX critical experiments available for use in validation exercises, it is important to determine that the application of interest to the reviewer fits within the area of applicability for the set of critical benchmark experiments selected for validation. Guidance on how to select an appropriate set of benchmark experiments for a fissile system is given in NUREG/CR-5661 and in NUREG/CR-6361. A computational methodology to select an appropriate set of benchmark experiments for a fissile package application has also been developed for SCALE (Broadhead et al. 1999; Broadhead et al. 2004; Rearden and Childs 2000; Rearden and Mueller 2008; Dunn and Rearden 2001).

Beginning with version 5 of SCALE, a set of sensitivity and uncertainty analysis tools have been developed and are included with the code that gives a measure of the similarity of the reactivity of a package application to that of an experimental benchmark. Successive versions of SCALE include an improved and expanded set of tools (Perfetti and Rearden 2016; Rearden et al. 2011; Perfetti et al. 2016; Williams et al. 2013, ORNL 2011). Sensitivity coefficients for both systems are computed and give the sensitivity of each system's k_{eff} to the cross-section

[2] If the benchmarks are applied to a package application where there is a lack of experimental data, the 0.05 administrative margin may not be sufficient, and the reviewer needs to be aware of this issue. In reality, the 0.05 margin should be sufficient, but there needs to be an assessment of the adequacy of the 0.05 to establish the basis. Guidance for deciding on an acceptable choice for the administrative margin is given in NUREG/CR-5661. See also NUREG/CR-6361.

data. These sensitivity coefficients are determined for each energy group in the cross-section library chosen in the analysis, as well as the sum over all energy groups. Two integral parameters for the combined systems are produced from the sensitivity data to determine system-to-system similarities. The first parameter can be used as a gauge of system similarity to sensitivity only. The second parameter can be used as a measure of the similarity of the systems in terms of uncertainty, not just sensitivity. The pair of integral parameter values is determined for every potential benchmark experiment with the package application of interest. When two systems produce an appropriately high value (i.e., a value sufficiently close to 1) for either integral parameter, or both, this indicates the k_{eff} response is similar enough that one system serves well to validate the criticality safety parameters for the other system. Previous analyses using these tools have used the value of 0.8 as a threshold for determining that systems under consideration are similar enough; this is consistent with recommendations the SCALE developer, Oak Ridge National Laboratory, has made. The benchmark experiments chosen for complete validation are those with high integral parameter values (Broadhead et al. 1999; Broadhead et al. 2004; Rearden and Childs 2000; Rearden and Mueller 2008; Dunn and Rearden 2001).

New parameters can also be constructed from the components of the integral parameters and can be used to explore the sensitivity of specific nuclide reactions of benchmark experiments with the package application of interest. For example, if low integral parameter values are found for an application with all benchmark experiments chosen for validation, the new parameters could serve to identify which nuclides would require additional experimental benchmark data for complete validation. Also, in the validation of transportation packages for commercial fuel, numerous benchmark experiments might serve to validate the fission reactions, and thus high integral parameter values would be found. However, the new parameters could be used to find benchmarks to ensure that any poison materials in the package are also well validated by the benchmarks. With the inclusion of these sensitivity and uncertainty analysis tools in the SCALE code, beginning with version 5, the criticality safety analyst now has a powerful set of tools available to perform detailed quantitative analyses to determine the applicability of benchmark experiments to help design package applications under consideration (Broadhead et al. 1999; Broadhead et al. 2004; Rearden and Childs 2000; Rearden and Mueller 2008; Dunn and Rearden 2001).

Table D–1 Important characteristics of lattice experiments with weight percent of Pu/(Pu+U) to 5 percent (from IHECSBE)

Designation for experiments [a]	MCT-009	MCT-002	MCT-002	MCT-006	MCT-007	MCT-008	MCT-004	MCT-005
Facility where experiments conducted	Hanford	Hanford	Hanford	Hanford	Hanford	Hanford	Tokai	Hanford
Computer codes used in evaluations [b]	MCNP/KENO	MCNP	MCNP	MCNP/KENO	MCNP/KENO	MCNP/KENO	MCNP/KENO	MCNP/KENO
Cross section sets used in evaluations [c]	ENDF/B-V/IV	ENDF/B-V	ENDF/B-V	ENDF/B-V/IV	ENDF/B-V/IV	ENDF/B-V/IV	JENDL-3.2	ENDF/B-V/IV
Cross section type [d]	cont/27grp	cont	cont	cont/27grp	cont/27grp	cont/27grp	cont/137grp	cont/27grp
Fuel compound [e]	oxide	oxide	oxide	oxide	oxide	oxide	oxide	oxide
Fuel compound form	solid	solid	solid	solid	solid	solid	solid	solid
Density of fuel [f]	86.7%	86.7%	86.7%	86.7%	86.7%	86.7%	55%	86%
Organization of fuel [g]	pins	pins	pins	pins	pins	pins	pins	pins
Cladding used for fuel [h]	Zirc-2	Zirc-2	Zirc-2	Zirc-2	Zirc-2	Zirc-2	Zirc-2	Zirc-2
Pu/(Pu+U) atom percent	1.51%	1.80%	1.80%	1.80%	2.01%	2.01%	3.03%	3.52%
^{235}U atom percent	0.16%	0.71%	0.71%	0.71%	0.72%	0.72%	0.71%	0.71%
^{238}U atom percent	99.84%	99.29%	99.29%	99.29%	99.28%	99.28%	99.29%	99.29%
^{238}Pu atom percent	-	0.01%	0.01%	0.01%	-	-	0.50%	0.28%
^{239}Pu atom percent	91.41%	91.84%	91.84%	91.84%	81.11%	71.76%	68.18%	75.39%
^{240}Pu atom percent	7.83%	7.76%	7.76%	7.76%	16.54%	23.50%	22.02%	18.10%
^{241}Pu atom percent	0.73%	0.37%	0.37%	0.37%	2.15%	4.08%	7.26%	5.08%
^{242}Pu atom percent	0.03%	0.03%	0.03%	0.03%	0.20%	0.66%	2.04%	1.15%
Plutonium type as given in Table B–1	WG	WG	WG	WG	FG	PG	PG	FG-PG
Shape of lattice [i]	cylinder	rectangle	rectangle	cylinder	cylinder	cylinder	rectangle	cylinder
Pitch of lattice	triangle	square	square	triangle	triangle	triangle	square	triangle
Number of experiments in each set	6	3	3	6	5	6	4	7
Fissile moderator used [j]	H_2O	H_2O	B-H_2O	H_2O	H_2O	H_2O	H_2O	H_2O
Reflector used	H_2O	H_2O	B-H_2O	H_2O	H_2O	H_2O	H_2O	H_2O
Maximum effective bias of experiments in set (Eff-Bias)	-0.0112	-0.0052	-0.0026	-0.0089	-0.0040	-0.0068	-0.0097	-0.0037
Maximum uncertainty of experiments in set (Exp-Uncer)	0.0080	0.0059	0.0045	0.0054	0.0061	0.0065	0.0051	0.0042
Exp-Uncer minus Eff-Bias (WCD)	0.0192	0.0111	0.0071	0.0143	0.0101	0.0133	0.0148	0.0079

[a] MCT = MIX-COMP-THERM.
[b] Codes MCNP (LANL, 1997) and KENO (ORNL, 1995).
[c] ENDF/B-V/IV means cross section set ENDF/B-V for MCNP and cross section set ENDF/B-IV for KENO. JENDL-3.2 is the cross section set for both MCNP and KENO.
[d] Cross section type is either continuous cross sections (cont.) or group cross sections (27grp, 137grp).
[e] Heavy metal is as an oxide.
MOX density given as percent of theoretical density taken as 11.00 g/cm^3.
[g] Pins means organization of MOX is as pellets in fuel pins.
[h] Zirc-2 means Zircaloy-2 cladding.
[i] Cylinder means shape of lattice is a cylinder. Rectangle means shape of lattice is a rectangle.
[j] B-H_2O means borated water as moderator or reflector.

Table D–2 Important characteristics of lattice experiments with weight percent of Pu/(Pu+U) from 5 percent to 15 percent (from IHECSBE)

Designation for experiments [a]	MCT-003	MCT-003	MCT-012	MCT-012	MCT-012	MCT-012
Facility where experiments conducted	WREC	WREC	Hanford	Hanford	Hanford	Hanford
Computer codes used in evaluations [b]	MCNP	MCNP	MCNP/KENO	MCNP/KENO	MCNP/KENO	MCNP/KENO
Cross section sets used in evaluations [c]	ENDF/B-V	ENDF/B-V	ENDF/B-V	ENDF/B-V	ENDF/B-V	ENDF/B-V
Cross section type [d]	cont	cont	cont/238grp	cont/238grp	cont/238grp	cont/238grp
Fuel compound [e]	oxide	oxide	oxide-poly	oxide-poly	oxide-poly	oxide-poly
Fuel compound form	solid	solid	solid	solid	solid	solid
Density of fuel [f]	94%	94%	N/A	N/A	N/A	N/A
Organization of fuel [g]	pins	pins	cubes, slabs	cubes, slabs	cubes, slabs	cubes, slabs
Cladding used for fuel [h]	Zirc-4	Zirc-4	plastic 471	plastic 471	plastic 471	plastic 471
Pu/(Pu+U) atom percent	6.63%	6.63%	7.60%	7.89%	14.62%	14.62%
^{235}U atom percent	0.71%	0.71%	0.15%	0.15%	0.15%	0.15%
^{238}U atom percent	99.29%	99.29%	99.85%	99.85%	99.85%	99.85%
^{238}Pu atom percent	-	-	0.59%	-	-	-
^{239}Pu atom percent	90.65%	90.65%	67.97%	91.25%	91.42%	91.42%
^{240}Pu atom percent	8.55%	8.55%	22.95%	8.12%	7.97%	7.97%
^{241}Pu atom percent	0.76%	0.76%	5.57%	0.58%	0.57%	0.57%
^{242}Pu atom percent	0.04%	0.04%	2.92%	0.05%	0.04%	0.04%
Plutonium type as given in Table B–1	WG-FG	WG-FG	PG	WG	WG	WG
Shape of lattice [i]	rectangle	rectangle	3D cube	3D cube	3D cube	3D cube
Pitch of lattice	square	square	square	square	square	square
Number of experiments in each set	5	1	6	7	6	3
Fissile moderator used [j]	H_2O	B-H_2O	polystyrene	polystyrene	polystyrene	polystyrene
Reflector used	H_2O	B-H_2O	Plexiglas	Plexiglas	Plexiglas	none
Maximum effective bias of experiments in set (Eff-Bias)	-0.0063	-0.0030	-0.0270	-0.0016	-0.0016	-0.0020
Maximum uncertainty of experiments in set (Exp-Uncer)	0.0071	0.0052	0.0058	0.0036	0.0027	0.0037
Exp-Uncer minus Eff-Bias (WCD)	0.0134	0.0082	0.0328	0.0052	0.0043	0.0057

[a] MCT = MIX-COMP-THERM.
[b] Codes MCNP (LANL, 1997) and KENO (ORNL, 1995).
[c] ENDF/B-V is the cross section set for MCNP and KENO.
[d] Cross section type is either continuous cross sections (cont) or group cross sections (238grp).
[e] Heavy metal is as an oxide. Oxide-poly means mixture of MOX particles and polystyrene pressed into cubes and slabs.
[f] MOX density given as percent of theoretical density taken as 11.00 g/cm^3.
[g] Pins means organization of MOX is as pellets in fuel pins. Cubes, slabs means organization of MOX-polystyrene is as cubes and slabs.
[h] Zirc-4 means Zircaloy-4 cladding. Plastic 471 means cladding is six mil plastic tape MM&M (3M) #471.
[i] Rectangle means shape of lattice is a rectangle. 3D cube means cubes and slabs stacked into the shape of a 3D rectangular cube.
[j] B-H_2O means borated water as moderator or reflector.

Table D–3 Important characteristics of lattice experiments with weight percent of Pu/(Pu+U) greater than 15 percent (from IHECSBE)

Designation for experiments [a]	MCT-001	MCT-011	MCT-012	MCT-012
Facility where experiments conducted	Hanford	Valduc	Hanford	Hanford
Computer codes used in evaluations [b]	MONK	MORET	MCNP/KENO	MCNP/KENO
Cross section sets used in evaluations [c]	UKNDL	JEF2.2	ENDF/B-V	ENDF/B-V
Cross section type [d]	cont	172gp	cont/238grp	cont/238grp
Fuel compound [e]	oxide	oxide	oxide-poly	oxide-poly
Fuel compound form	solid	solid	solid	solid
Density of fuel [f]	89.4%	94.2%	N/A	N/A
Organization of fuel [g]	pins	pins	cubes, slabs	cubes, slabs
Cladding used for fuel [h]	316SS	Z3CND18.12 SS	plastic 471	plastic 471
Pu/(Pu+U) atom percent	19.70%	25.80%	30.00%	30.00%
^{235}U atom percent	0.71%	60.15%	0.15%	0.15%
^{238}U atom percent	99.29%	39.85%	99.85%	99.85%
^{238}Pu atom percent	0.15%	-	-	-
^{239}Pu atom percent	85.54%	89.00%	91.22%	91.22%
^{240}Pu atom percent	11.46%	9.72%	8.13%	8.13%
^{241}Pu atom percent	2.50%	1.21%	0.61%	0.61%
^{242}Pu atom percent	0.35%	0.07%	0.04%	0.04%
Plutonium type as given in Table B–1	FG	WG-FG	WG	WG
Shape of lattice [i]	rectangle	cylinder	3D cube	3D cube
Pitch of lattice	square	triangle	square	square
Number of experiments in each set	4	6	8	3
Fissile moderator used	H_2O	H_2O	polystyrene	polystyrene
Reflector used	H_2O	H_2O	Plexiglas	none
Maximum effective bias of experiments in set (Eff-Bias)	-0.0103	-0.0006	-0.0018	-0.0086
Maximum uncertainty of experiments in set (Exp-Uncer)	0.0025	0.0017	0.0049	0.0052
Exp-Uncer minus Eff-Bias (WCD)	0.0128	0.0023	0.0067	0.0138

[a] MCT = MIX-COMP-THERM.
[b] Codes MCNP (LANL, 1997), KENO (ORNL, 1995), MONK, and MORET. MONK is a three-dimensional Monte Carlo radiation transport code that uses point-wise cross sections, developed by A.E.A. Technology of the United Kingdom. MORET is a three-dimensional Monte Carlo criticality code that uses multigroup cross sections, developed by C.E.A. of France.
[c] ENDF/B-V is the cross section set for MCNP and KENO. UKNDL is the cross section set for MONK. JEF2.2 is the cross section set for MORET.
[d] Cross section type is either continuous cross sections (cont) or group cross sections (172grp, 238grp).
[e] Heavy metal is as an oxide. Oxide-poly means mixture of MOX particles and polystyrene pressed into cubes and slabs.
[f] MOX density given as percent of theoretical density taken as 11.00 g/cm^3.
[g] Pins means organization of MOX is as pellets in fuel pins. Cubes, slabs means organization of MOX-polystyrene is as cubes and slabs.
[h] SS means stainless steel cladding. Plastic 471 means cladding is six mil plastic tape MM&M (3M) #471.
[i] Cylinder means shape of lattice is a cylinder. Rectangle means shape of lattice is a rectangle. 3D cube means cubes and slabs stacked into the shape of a 3D rectangular cube.

Table D–4 Important characteristics of tank experiments with weight percent of Pu/(Pu+U) to 31 percent (from IHECSBE)

Designation for experiments [a]	MST-001	MST-001	MST-001	MST-001	MST-002	MST-003
Facility where experiments conducted	Hanford	Hanford	Hanford	Hanford	Hanford	AWRE
Computer codes used in evaluations [b]	MCNP/KENO	MCNP/KENO	MCNP/KENO	MCNP/KENO	MCNP/KENO	MONK
Cross section sets used in evaluations [c]	ENDF/B-V/IV	ENDF/B-V/IV	ENDF/B-V/IV	ENDF/B-V/IV	ENDF/B-V/IV	UKNDL
Cross section type [d]	cont/27grp	cont/27grp	cont/27grp	cont/27grp	cont/27grp	cont
Fuel compound [e]	nitrate	nitrate	nitrate	nitrate	nitrate	nitrate
Fuel compound form	liquid	liquid	liquid	liquid	liquid	liquid
Density of fuel [f]	1.31–1.68	1.31–1.68	1.31–1.48	1.70	1.09	1.11–1.52
Pu/(Pu+U) atom percent	22%	22%	22%	22%	23%	30.7%
^{235}U atom percent	0.70%	0.70%	0.70%	0.70%	0.70%	0.72%
^{238}U atom percent	99.30%	99.30%	99.30%	99.30%	99.30%	99.28%
^{238}Pu atom percent	0.03%	0.03%	0.03%	0.03%	0.03%	-
^{239}Pu atom percent	91.12%	91.12%	91.12%	91.12%	91.12%	93.95%
^{240}Pu atom percent	8.34%	8.34%	8.34%	8.34%	8.31%	5.63%
^{241}Pu atom percent	0.42%	0.42%	0.42%	0.42%	0.45%	0.42%
^{242}Pu atom percent	0.09%	0.09%	0.09%	0.09%	0.09%	-
Plutonium type as given in Table B–1	WG	WG	WG	WG	WG	WG
Tank fissile liquid is in [g]	N/A	cylinder	cylinder	cylinder	cylinder	slab
Auxiliary tank additional fissile liquid is in [h]	annular	annular	annular	N/A	N/A	N/A
Number of experiments in each set	2	5	2	1	1	10
Fissile moderator used [i]	soln H_2O	soln H_2O	soln H_2O	soln H_2O	soln H_2O	soln H_2O
Reflector used [j]	B_4C-concrete	B_4C-concrete	poly-Cd cover	none	H_2O	H_2O & poly
Maximum effective bias of experiments in set (Eff-Bias)	-0.0101	-0.0164	-0.0028	-0.0068	-0.0020	-0.0038
Maximum uncertainty of experiments in set (Exp-Uncer)	0.0016	0.0016	0.0016	0.0016	0.0024	0.0025
Exp-Uncer minus Eff-Bias (WCD)	0.0117	0.0180	0.0044	0.0084	0.0044	0.0063

[a] MST = MIX-SOL-THERM.
[b] Codes MCNP (LANL, 1997), KENO (ORNL, 1995), and MONK (A.E.A. Technology). MONK is a three-dimensional Monte Carlo radiation transport code that uses point-wise cross sections, developed by A.E.A. Technology of the United Kingdom.
[c] ENDF/B-V/IV means cross section set ENDF/B-V for MCNP and ENDF/B-IV for KENO. UKNDL is cross section set for MONK.
[d] Cross section type is either continuous cross sections (cont) or group cross sections (27grp).
[e] Heavy metal is as a nitrate dissolved in dilute nitric acid solution.
[f] Solution density is in g/ml.
[g] Containers for fissile solution are cylinders or slabs.
[h] Annular tank surrounding central cylindrical tank or just an annular tank.
[i] Soln H_2O means the moderator is the fissile nitrate solution.
[j] B_4C-concrete means borated concrete. Poly-Cd cover means polyethylene reflector coated with Cd.

Table D–5 Important characteristics of tank experiments with weight percent of Pu/(Pu+U) greater than 31 percent (from IHECSBE)

Designation for experiments [a]	MST-004	MST-004	MST-004	MST-005	MST-005	MST-002	MST-001
Facility where experiments conducted	Hanford	Hanford	Hanford	Hanford	Hanford	Hanford	Hanford
Computer codes used in evaluations [b]	MCNP/KENO	MCNP/KENO	MCNP/KENO	MCNP/KENO	MCNP/KENO	MCNP/KENO	MCNP/KENO
Cross section sets used in evaluations [c]	ENDF/B-V/IV	ENDF/B-V/IV	ENDF/B-V/IV	ENDF/B-V/IV	ENDF/B-V/IV	ENDF/B-V/IV	ENDF/B-V/IV
Cross section type [d]	cont/27grp	cont/27grp	cont/27grp	cont/27grp	cont/27grp	cont/27grp	cont/27grp
Fuel compound [e]	nitrate	nitrate	nitrate	nitrate	nitrate	nitrate	nitrate
Fuel compound form	liquid	liquid	liquid	liquid	liquid	liquid	liquid
Density of fuel [f]	1.17–1.67	1.17–1.67	1.17–1.67	1.17–1.67	1.17–1.67	1.05	1.15–1.44
Pu/(Pu+U) atom percent	40%	40%	40%	40%	40%	52%	97%
^{235}U atom percent	0.56%	0.56%	0.56%	0.56%	0.56%	0.70%	2.29%
^{238}U atom percent	99.44%	99.44%	99.44%	99.44%	99.44%	99.30%	97.71%
^{238}Pu atom percent	0.03%	0.03%	0.03%	0.03%	0.03%	0.03%	0.03%
^{239}Pu atom percent	91.12%	91.12%	91.12%	91.12%	91.12%	91.12%	91.57%
^{240}Pu atom percent	8.34%	8.34%	8.34%	8.34%	8.34%	8.34%	7.94%
^{241}Pu atom percent	0.42%	0.42%	0.42%	0.42%	0.42%	0.42%	0.39%
^{242}Pu atom percent	0.09%	0.09%	0.09%	0.09%	0.09%	0.09%	0.07%
Plutonium type as given in Table B–1	WG	WG	WG	WG	WG	WG	WG
Tank fissile liquid is in [g]	cylinder	cylinder	cylinder	slab	slab	cylinder	cylinder
Auxiliary tank additional fissile liquid is in [h]	N/A	N/A	N/A	N/A	N/A	N/A	annular
Number of experiments in each set	3	3	3	3	4	2	3
Fissile moderator used [i]	soln H_2O	soln H_2O	soln H_2O	soln H_2O	soln H_2O	soln H_2O	soln H_2O
Reflector used [j]	none	H_2O	concrete	none	H_2O	H_2O	B_4C-concrete
Maximum effective bias of experiments in set (Eff-Bias)	-0.0060	-0.0048	-0.0024	-0.0114	-0.0026	-0.0020	-0.0032
Maximum uncertainty of experiments in set (Exp-Uncer)	0.0033	0.0033	0.0078	0.0036	0.0037	0.0024	0.0016
Exp-Uncer minus Eff-Bias (WCD)	0.0093	0.0081	0.0102	0.0150	0.0063	0.0044	0.0048

[a] MST = MIX-SOL-THERM.
[b] Codes MCNP (LANL, 1997) and KENO (ORNL, 1995).
[c] ENDF/B-V/IV means ENDF/B-V for MCNP and ENDF/B-IV for KENO.
[d] Cross section type is either continuous cross sections (cont) or group cross sections (27grp).
[e] Heavy metal is as a nitrate dissolved in dilute nitric acid solution.
[f] Solution density is in g/ml.
[g] Containers for fissile solution are cylinders or slabs.
[h] Annular tank surrounding central cylindrical tank.
[i] Soln H_2O means the moderator is the fissile nitrate solution.
[j] B_4C-concrete means borated concrete.

D.3 References

Broadhead, B.L., et al., "Sensitivity and Uncertainty Analyses Applied to Criticality Safety Validation," NUREG/CR-6655, Vols. 1 and 2 (ORNL/TM-13692/V1 and V2), prepared for the U.S. Nuclear Regulatory Commission by Oak Ridge National Laboratory, Oak Ridge, TN, November 1999.

Broadhead, B.L., et al., Sensitivity- and Uncertainty-Based Criticality Safety Validation Techniques, *Nuclear Science and Engineering*, 146:3, 340–366 (2004).

Dunn, M.E., and B.T. Rearden, "Application of Sensitivity and Uncertainty Analysis Methods to a Validation Study for Weapons-Grade Mixed-Oxide Fuel," 2001 ANS Embedded Topical Meeting on Practical Implementation of Nuclear Criticality Safety, Reno, NV, November 11–15, 2001.

Dyer, H.R., and C.V. Parks, "Recommendations for Preparing the Criticality Safety Evaluation of Transportation Packages," NUREG/CR-5661 (ORNL/TM-11936), prepared for the U.S. Nuclear Regulatory Commission by Oak Ridge National Laboratory, Oak Ridge, TN, April 1997.

Fernex, F., *Programme HTC–Phase 1: Réseaux de Crayons dans l'Eau Pure (Water-Moderated and Reflected Simple Arrays) Reevaluation des Expériences*, DSU/SEC/T/2005-33/D.R., Valduc, France, IRSN (2006). PROPRIETARY document.

Fernex, F., *Programme HTC–Phase 2: Réseaux Simples en Eau Empoisonnée (Bore et Gadolinium) (Reflected Simple Arrays Moderated by Poisoned Water with Gadolinium or Boron) Réévaluation des Experiences*, DSU/SEC/T/2005-38/D.R., Valduc, France, IRSN (2006). PROPRIETARY document.

Fernex, F., *Programme HTC–Phase 3: Configurations "Stockage en Piscine" (Pool Storage) Réévaluation des Experiences*, DSU/SEC/T/2005-37/D.R., Valduc, France, IRSN (2006). PROPRIETARY document.

Fernex, F., *Programme HTC–Phase 4: Configurations "Châteaux de Transport" (Shipping Cask) Réévaluation des Experiences*, DSU/SEC/T/2005-36/D.R., Valduc, France, IRSN (2006). PROPRIETARY document.

Lichtenwalter, J.J., et al., "Criticality Benchmark Guide for Light-Water-Reactor Fuel in Transportation and Storage Packages," NUREG/CR-6361 (ORNL/TM-13211), prepared for the U.S. Nuclear Regulatory Commission by Oak Ridge National Laboratory, Oak Ridge, TN, March 1997.

Los Alamos National Laboratory (LANL), *MCNP – A General Monte Carlo N-Particle Transport Code*, Version 4B, Judith F. Briesmeister, Editor, Los Alamos National Laboratory, LA-12625-M, March 1997. Various versions of MCNP are available; this reference is for version 4B.

Mueller, D.E., K.R. Elam, and P.B. Fox, "Evaluation of the French Haut Taux de Combustion (HTC) Critical Experiment Data," NUREG/CR-6979 (ORNL/TM-2007/083), prepared for the U.S. Nuclear Regulatory Commission by Oak Ridge National Laboratory, Oak Ridge, TN, September 2008.

Nuclear Energy Agency (NEA), "International Handbook of Evaluated Criticality Safety Benchmark Experiments," Organization for Economic Co-operation and Development, NEA/NSC/DOC(95)03, September 2001 Edition.

Nuclear Energy Agency (NEA), “International Handbook of Evaluated Criticality Safety Benchmark Experiments,” Organization for Economic Co-operation and Development, NEA/NSC/DOC(95)03, September 2014 Edition.

Oak Ridge National Laboratory (ORNL), *SCALE: A Modular Code System for Performing Standardized Analyses for Licensing Evaluations*, NUREG/CR-0200, Rev. 4 (ORNL/NUREG/CSD-2/R4), Vols. I, II, III, October 1995. Various versions of SCALE are available; this reference is for version 4.3.

Oak Ridge National Laboratory (ORNL), *Scale: A Comprehensive Modeling and Simulation Suite for Nuclear Safety Analysis and Design*, ORNL/TM-2005/39, Version 6.1, Oak Ridge National Laboratory, Oak Ridge, TN, June 2011. Available from Radiation Safety Information Computational Center at Oak Ridge National Laboratory as CCC-785.

Perfetti, C.M., & B.T. Rearden, “Development of a Generalized Perturbation Theory Method for Sensitivity Analysis Using Continuous-Energy Monte Carlo Methods,” *Nuclear Science and Engineering*, 182:3, 354–368 (2016).

Perfetti, C.M., B.T. Rearden, and W.R. Martin, “SCALE Continuous-Energy Eigenvalue Sensitivity Coefficient Calculations,” *Nuclear Science and Engineering*, 182:3, 332–353 (2016).

Rearden, B.T., and R.L. Childs, “Prototypical Sensitivity and Uncertainty Analysis Codes for Criticality Safety with the SCALE Code System,” *Trans. Am. Nucl. Soc.*, Washington, DC, November 2000.

Rearden, B.T., and D.E. Mueller, “Recent Use of Covariance Data for Criticality Safety Assessment,” *Nuclear Data Sheets*, 109, 2739–2744 (2008).

Rearden, B.T., et al., “Sensitivity and Uncertainty Analysis Capabilities and Data in SCALE,” *Nuclear Technology*, 174:2, 236–288 (2011).

Williams, M.L., et al., “A Statistical Sampling Method for Uncertainty Analysis with SCALE and XSUSA,” *Nuclear Technology*, 183:3, 515–526 (2013).

APPENDIX E DESCRIPTION AND REVIEW PROCEDURES FOR IRRADIATED TRITIUM-PRODUCING BURNABLE ABSORBER RODS PACKAGES

INTRODUCTION

This appendix is organized in the same manner as the chapters of this standard review plan (SRP) and pertains only to the review procedures (Section 4) of each chapter. The section numbering in this section corresponds to the pertinent section in the chapters of this SRP.

This appendix is intended to provide details on package-review guidance for the shipment of irradiated tritium-producing burnable absorber rods (TPBARs) and supplements the review procedures in the primary chapters of this SRP. Chapters of this SRP would normally be applicable to the review of any packaging used for the shipment of irradiated TPBARs. For purposes of this appendix, however, no specific packaging has been identified for the shipment of such contents. This appendix, therefore, should be considered to be a topical report, as opposed to a package-specific report.

During the irradiation process, TPBARs function in the reactor core like any other burnable poison rods, with the notable exception that TPBARs are designed to produce tritium. Thus, on the one hand, the primary purpose of this appendix is to provide guidance for the review of tritium transportation packages. On the other hand, because TPBARs function in the reactor core like any other burnable poison rods, the shipment of irradiated TPBARs can be expected to take on all the shielding considerations of a spent nuclear fuel (SNF) transportation package, without having to deal with any of the criticality concerns.

This appendix considers each of the chapters of the SRP and highlights the special considerations or attention needed for TPBARs. In sections where no significant differences exist, that particular section is omitted. Because it is already assumed that the shipment of irradiated TPBARs will be made in packages previously used for the shipment of SNF, there are many cross-references to individual chapter sections of this SRP.

1 General Information Evaluation

1.4 Review Procedures

This section considers each of the subsections of Section 1.4 (Review Procedures) of Chapter 1 and highlights the special considerations or attention needed for TPBAR transportation packages. In subsections where no significant differences were found, that particular subsection has been omitted from this section.

See Chapter 1, Figure 1-1, of this SRP for the interrelationship between the review of the general information and the other chapter reviews.

1.4.2.3 Contents

TPBARs are similar in size and nuclear characteristics to standard, commercial pressurized-water reactor (PWR), stainless-steel-clad burnable absorber rods. The exterior of the TPBAR is a stainless-steel tube, approximately 386 centimeters [152 inches] from tip to tip at room temperature. The nominal outer diameter of the stainless-steel cladding is 0.381 inches. The internal components have been designed and selected to produce and retain tritium (PNNL, 2012).

Figure E.1-1 illustrates the concentric, cylindrical, internal components of a TPBAR. Within the stainless-steel cladding is a metal getter[1] tube that encircles a stack of annular, ceramic pellets of lithium aluminate ($LiAlO_2$). The pellets are enriched with the lithium-6 isotope. When irradiated in a PWR, the lithium-6 pellets absorb neutrons, simulating the nuclear characteristics of a burnable absorber rod, and produce tritium, a hydrogen isotope. The tritium chemically reacts with the metal getter, which captures the tritium as a metal hydride.

To meet design limitations on rod internal pressure and burnup of the lithium pellets, the amount of tritium production per TPBAR is limited to a maximum of 1.2 grams (at 9,619 curies (Ci) of tritium per gram—see Attachment A to this appendix) over the full design life of the rod (approximately 500 equivalent full-power days). The potential release rate of tritium into the reactor coolant is subject to a design limit of less than 1,000 Ci/1,000 TPBARs per year. This is achieved by the combined effects of the metal getter tube surrounding the lithium aluminate pellets and an aluminide barrier coating on the inner surface of the cladding.

TPBAR Components

TPBAR cladding is double-vacuum-melted, Type 316 stainless steel. To prevent hydrogen from diffusing inward from the coolant to the TPBAR getter and to prevent tritium from diffusing outward from the TPBAR to the reactor coolant, an aluminide coating is on the inner surface of the cladding. This coating barrier must remain effective during fabrication, handling, and in-reactor operations.

The annular ceramic pellets are composed of sintered, high-density, lithium aluminate.

[1] A colloquial term used in the tritium business, the term “getter” can be and is often used as a noun, an adjective, and a verb.

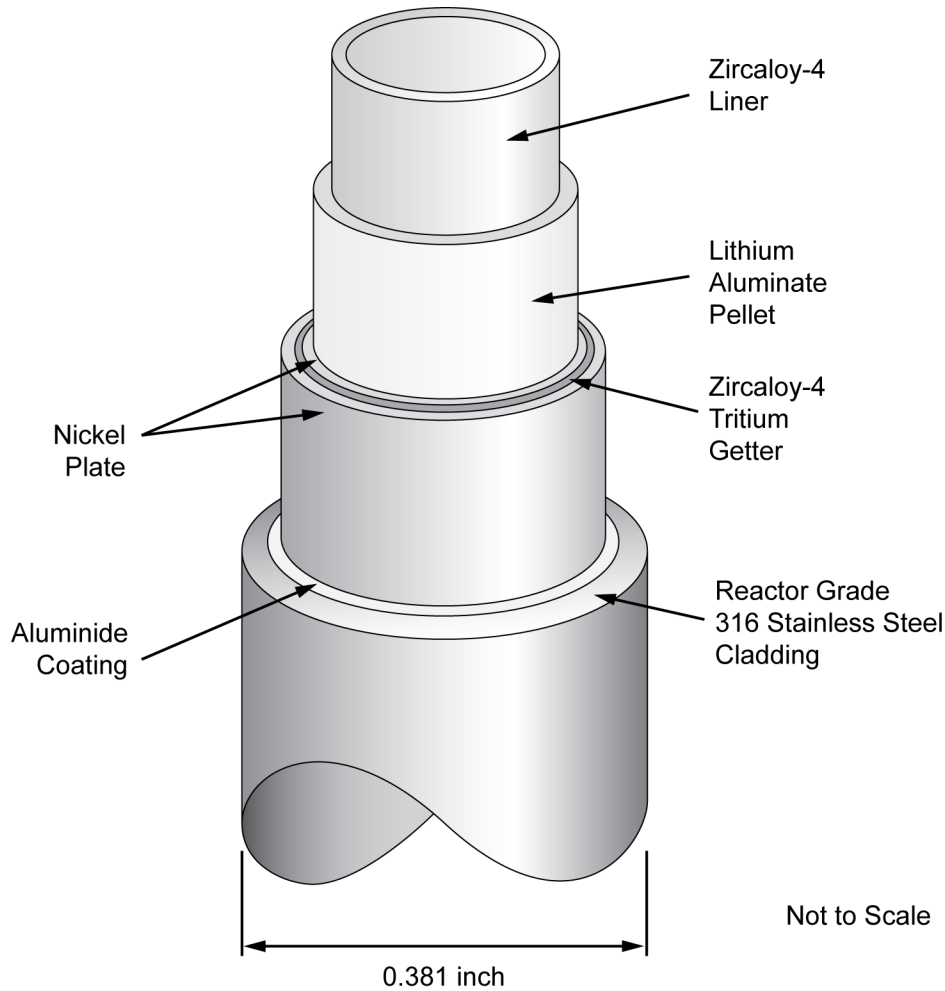

Figure E1-1 Isometric Section of a Tritium-Producing Burnable Absorber Rod

The metal getter tube located between the cladding and the lithium aluminate pellets is composed of nickel-plated Zircaloy-4. The getter absorbs the molecular tritium (T_2) generated during irradiation. Nickel plating is used on both sides of the getter to prevent oxidation of the Zircaloy-4 surfaces, which would reduce the tritium absorption rate. Consequently, this plating must remain effective during fabrication, handling, and in-reactor operations.

An unplated Zircaloy-4 tube lines the inside of the annular pellets. This component is called the "liner." Because some of the tritium produced in the pellets may be released as oxidized molecules (T_2O), the liner reduces these species to molecular tritium by reacting with the oxygen. The liner also provides mechanical support to prevent axial movement of pellet material in case any pellets crack during TPBAR handling or operation.

Axial Arrangement of the Components

Two TPBAR designs are described in this document: (i) the standard TPBAR design, in which the pellet column and getter tubes are segmented into sections called "pencils," and (ii) the full-length getter TPBAR design, in which the getter tube runs the full length of the TPBAR. An "interim option" for the full-length getter design facilitates use of existing pellet stacks and liners.

Standard TPBAR Design

The getter tube is cut and rolled over (coined) to capture the liner and pellets within an assembly called a “pencil.” A total of 11 pencil assemblies are stacked within the cladding tube of each TPBAR (see Figure E.1-2). The majority of the pencils are of standard length (approximately 12 inches). One or more of the pencils are of variable length.

To minimize the impact of power peaking in adjacent fuel rods resulting from the axial gaps between the stacked pencils, there is more than one type of TPBAR. The types are differentiated by where the variable-length pencil or pencils are loaded within the pencil stack. The loading sequence of the pencils is tracked, and each TPBAR is identified by type so that the location of each TPBAR type within a TPBAR assembly can be specified.

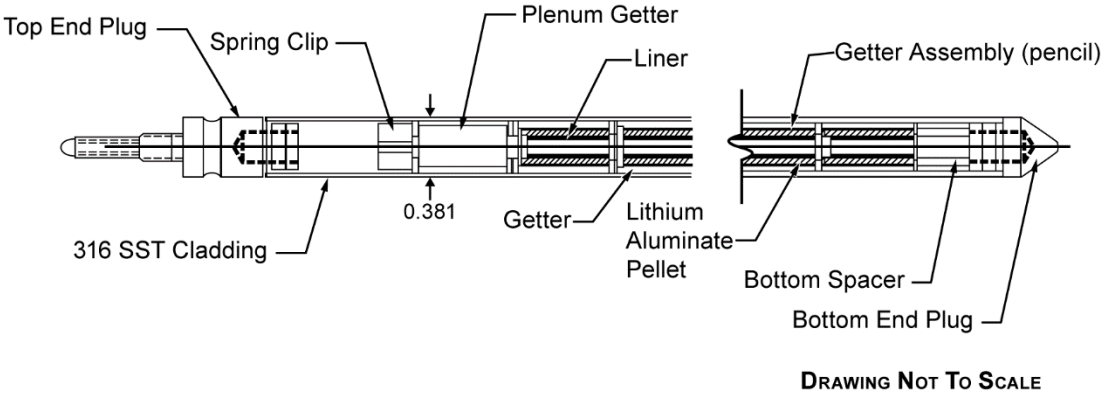

Figure E1-2 Axial Layout of TPBAR Internal Components—Standard Design

Full-Length Getter TPBAR Design

The axial arrangement of components is altered for the full-length getter TPBAR design. In this design, a single getter tube runs the full length of the TPBAR and surrounds both the pellet column and the upper and lower spacer tubes (see Figure E.1-3). The spacer tubes at the top and bottom of the pellet column are nickel-plated Zircaloy getters. The Zircaloy liner tubes and lithium aluminate pellet stacks in the full-length getter design are longer than in the standard design: typically, approximately 16 inches compared to approximately 12 inches in the standard design. However, for the interim full-length getter design option, the liner tubes and pellet stacks will be similar to (or made from) standard-design liner tubes and pellet stacks. That is, a combination of standard-length stacks (approximately 12 inches) and short-length stacks (approximately 9 inches) from the standard design will be used to make up the pellet column in the interim full-length getter design. The interim design option is employed solely for the purpose of utilizing existing inventories of components.

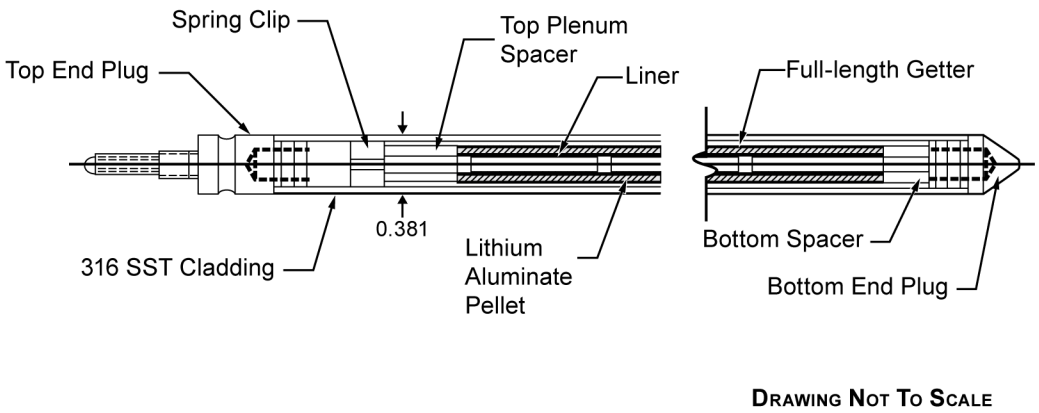

Figure E1-3 Axial Layout of TPBAR Internal Components—Full-Length Getter Design

The use of the full-length getter design eliminates the need for variable-length pencils and different TPBAR types to minimize the impact of power peaking in adjacent fuel rods resulting from axial gaps between pencils. The pellet column in the full-length getter TPBAR design is essentially continuous, and there is no power-peaking penalty from axial gaps in the absorber column.

Common TPBAR Design Features

For hermetic closure of the TPBARs, end plugs similar to those used in commercial PWR burnable absorber rods are welded to each end of the cladding tube. As is shown in Figure E.1-3 and Figure E.1-4, a gas plenum space is located above the top of the absorber column and below the top end plug. A spring clip in this plenum space holds the internals in place during pre-irradiation handling and shipping. Depending on the design, either a top plenum getter tube or a spacer tube is placed in the plenum space to getter additional tritium.

The length of the column of enriched lithium aluminate must be variable to provide optimal flexibility in reactor core design. Consequently, the column of enriched lithium aluminate pellets is approximately centered axially about the core mid-plane elevation but ranges in total length from about 126 to 132 inches. A thick-walled, nickel-plated, Zircaloy-4 spacer tube is placed between the bottom of the absorber column and the bottom end plug both to support the absorber column and to getter tritium.

A TPBAR assembly is shown in Figure E.1-4. It should be noted, however, that a typical design used in a 17×17 fuel assembly would be 24 TPBARs, rather than the eight illustrated in Figure E.1-4. Multiple fuel assembly designs can be accommodated by changes to the TPBAR lengths and end plugs.

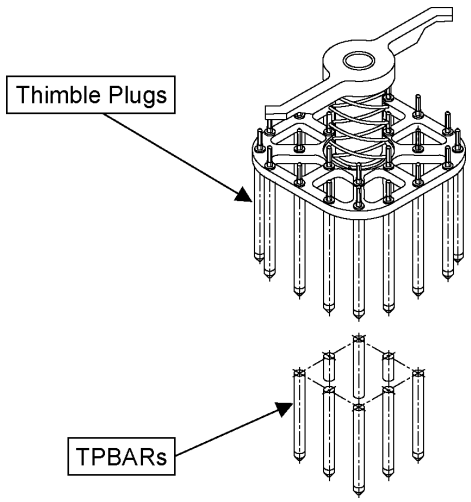

Figure E1-4 Typical TPBAR Assembly

After irradiation and removal from the reactor core, the individual TPBARs will be removed from their base plates and loaded into a consolidation canister for shipment. The consolidation canister, which is designed to hold up to 300 individual TPBARs in a closely packed formation, is then loaded into the transport package for shipment.

Under the current design, therefore, the maximum tritium contents for any given shipment becomes (300 TPBARs) × (1.2 grams of tritium/TPBAR) × (9,619 curies/gram of tritium) = 3.46×10^6 Ci, or about 3,200 A_2. Under these criteria, the package used for the shipment of irradiated TPBARs will be designated as a Category I package, in accordance with Regulatory Guide (RG) 7.11, "Fracture Toughness Criteria of Base Material for Ferritic Steel Shipping Case Containment Vessels with a Maximum Wall Thickness of 4 Inches (0.1 m)."

Other radioactive contents that should be expected include activation products from the stainless-steel cladding. Although these can be expected to include a relatively large fraction of cobalt-60, the total activity contribution from cobalt-60 should be relatively small, compared to the tritium. The shielding requirements needed for the shipment of irradiated TPBARs, however, are based entirely on the activation products from the stainless steel and are not driven at all by the tritium.

No fissile material contents are associated with the shipment of irradiated TPBARs. There are, therefore, no criticality concerns.

1.6 References

Pacific Northwest National Laboratory (PNNL), Tritium Technology Program, "Description of the Tritium-Producing Burnable Absorber Rod for the Commercial Light Water Reactor," TTQP-1-015, Revision 19, February 12, 2012. (Note: The bulk of the material presented in the sections above was taken from this reference.)

Regulatory Guide 7.11, U.S. Nuclear Regulatory Commission, "Fracture Toughness Criteria of Base Material for Ferritic Steel Shipping Cask Containment Vessels with a Maximum Wall Thickness of 4 Inches (0.1 m)," Agencywide Documents Access and Management System Accession No. ML003739413.

2 Structural Evaluation

2.4 Review Procedures

This section considers each of the subsections of Section 2.4 (Review Procedures) of this SRP and highlights the special considerations or attention needed for TPBAR transport packages. In subsections where no significant differences were found, that particular subsection has been omitted from this section.

See Chapter 2, Figure 2-1, of this SRP for the interrelationship between the review of the structural evaluation and the other chapter reviews.

2.4.3 Lifting and Tie-Down Standards for All Packages

The lifting and tie-down devices of a TPBAR shipping package should not normally be exposed to tritium. Therefore, the evaluation of such devices should be no different for a TPBAR transport package than for other packages. However, if such devices are an integral part of the containment vessel, such as trunnions attached to the containment vessel, the reviewer should verify that the structural capacity of the trunnions will not be degraded by tritium that may have permeated through the containment vessel after multiple shipments.

2.4.5 Normal Conditions of Transport

The reviewer should verify that the structural, bolting, and seal components/materials of the packaging lid can uphold the safety performance of the package under normal conditions of transport, if the components have been exposed to and may be affected by contact with tritium.

As discussed in Section 4.4.1.1 of this appendix, elastomeric seals cannot be used for the containment of tritium. The containment seals of tritium packages are commonly made of metal O-rings or metal-to-metal, knife-edge seals. These types of seals typically require a greater compression than that needed for elastomeric seals. To provide the necessary compression, high-strength bolts are often used with a high preload. The high preload is also intended to prevent vibrational loosening of the bolted closure, which can occur during normal conditions of transport. Using a very high preload (sometimes as much as 90 percent of the proof load of the bolts) is a common practice for preventing vibrational loosening. However, because high-strength bolts are susceptible to embrittlement by tritium, the high preload may cause the bolts to fracture unexpectedly under cold conditions, if the bolts have been affected by tritium. Normally, the fracture of a single bolt should not result in the fracture of other bolts and a catastrophic failure of the containment closure. Thus, RG 7.11 and RG 7.12, “Fracture Toughness Criteria of Base Material for Ferritic Steel Shipping Cask Containment Vessels with a Wall Thickness Greater than 4 Inches (0.1 m) but Not Exceeding 12 Inches (0.3 m),” have not explicitly included the containment closure bolts as “fracture critical” components, whose fracture, once initiated, will continue and result in a catastrophic failure of the containment. Thus, closure bolts of most packages are exempt from the stringent fracture-toughness requirement specified in RG 7.11 and RG 7.12. However, in the case of tritium containment, with high-strength bolts and high bolt preloads, such an exemption may not be a prudent practice. Therefore, it is recommended that the fracture criteria of RG 7.11 and RG 7.12 also be used for the selection of closure bolts for TPBAR shipping packages. In addition, the bolt stress should be kept below the bolting stress limits of American Society of Mechanical Engineers

Boiler and Pressure Vessel Code (ASME B&PV Code), Section III, Subsection NB. Thus, methods other than using very high preload may be needed to prevent vibrational loosening.

As discussed in Section 7.4.3 of this appendix, the package designer is obligated to provide a reasonable and conservative estimate of the tritium environment to which each packaging component may be exposed, and a realistic assessment of the potential effects that the tritium environment can have on the properties and structural integrity of each component. As indicated in Table E.4-1 of this appendix, the amount of tritium released from damaged TPBARs can be several orders of magnitude greater than that from intact TPBARs, or from event-failed TPBARs. Thus, the tritium concentration within the containment boundary can increase significantly with an increasing number of damaged TPBARs. For normal conditions of transport, the condition that has the greatest potential to produce additional damage to the TPBARs is vibration. A vibration and fatigue evaluation of the TPBARs should be performed to determine if the natural frequencies of the TPBARs lie in the dominant frequency ranges of the transport vehicle floor. While there are no regulatory requirements that state that the contents must arrive at the destination site intact, it is important to note that the working lifetimes of the components exposed to tritium can be expected to be inversely proportional to the tritium levels to which the components are exposed.

2.4.6 Hypothetical Accident Conditions

The reviewer should verify that excessive damage of the irradiated TPBAR contents will not occur under hypothetical accident conditions, so that the safety performance of the package will not be catastrophically affected throughout the sequence of hypothetical accident condition tests.

As was noted above, the amount of tritium released from damaged TPBARs can be several orders of magnitude greater than that from intact TPBARs, or from event-failed TPBARs, and that the tritium concentration in the containment can increase significantly with an increasing number of damaged TPBARs. Under hypothetical accident conditions, the test requirement that can be expected to have the greatest potential to produce damage to the TPBARs is the 30-foot end-on drop. A buckling analysis of the TPBARs should, therefore, be performed for the 30-foot end-on drop. Under the large axial compression generated by the end-on drop, the long, slender TPBARs can buckle easily and rupture after suffering excessive deformation/strain after buckling. The buckling evaluation of TPBARs must employ realistic assumptions about the initial geometric imperfections, as well as the lateral and end constraints of the TPBARs. When the effects of geometric imperfections and constraints are properly included, it should be expected that inadequately supported TPBARs can buckle easily under relatively low impact *g* loads. The reviewer, therefore, should verify that the TPBARs will be properly supported throughout the entire sequence of hypothetical accident condition tests.

Again, as was noted above, there are no regulatory requirements that state that the contents must arrive at the destination site intact. In this case, however, the reviewer should be looking for the possibility of catastrophic failure of the containment vessel, or any of its major components, as a result of substantially increased levels of tritium into containment.

2.6 References

U.S. Nuclear Regulatory Commission, Regulatory Guide 7.11, “Fracture Toughness Criteria of Base Material for Ferritic Steel Shipping Cask Containment Vessels with a Maximum Wall Thickness of 4 Inches (0.1 m),” June 1991a.

U.S. Nuclear Regulatory Commission, Regulatory Guide 7.12, “Fracture Toughness Criteria of Base Material for Ferritic Steel Shipping Cask Containment Vessels with a Wall Thickness Greater than 4 Inches (0.1 m) but Not Exceeding 12 Inches (0.3 m),” June 1991b.

3 Thermal Evaluation

3.4 Review Procedures

This section considers each of the subsections of Section 3.4 (Review Procedures) of this SRP and highlights the special considerations or attention needed for TPBAR transport packages. In subsections where no significant differences were found, that particular subsection has been omitted from this section.

See Chapter 3, Figure 3-1, of this SRP for the interrelationship between the review of the thermal evaluation and the other chapter reviews.

3.4.1 Description of Thermal Design

3.4.1.3 Content Decay Heat

According to Table E3-1 (PNNL, 2004), the TPBAR heat load 30 days after removal from the reactor is estimated by the design agency to be 3.35 watts/TPBAR. Although the estimated value quickly drops to 2.31 watts/TPBAR at a 90-day time interval, for purposes of conservatism, the 30-day value should be used for all thermal analyses, throughout.

This is also consistent with the information presented in Section 2.10.6 of NRC 2002, which states the following:

> TVA [has] also evaluated the heat production from a fully loaded consolidation canister and its potential effect on the spent fuel racks. The potential heat generation within the consolidation canister is small enough that it can be safely stored in the existing fuel racks. An irradiated absorber rod will only produce about 3 watts of heat 30 days after reactor shutdown. This is equivalent to a maximum heat load of 900 watts/canister, assuming a fully loaded canister contains a maximum of 300 absorber rods. This heat load is small given that adequate circulation is provided through the open topped canister and through the drainage/cooling holes on the sides and bottom of the canisters. Therefore, the staff concludes that this configuration will provide adequate natural circulation.

Since the typical heat load for a SNF transport package is normally on the order of a few to several tens of kilowatts, the total heat load on a typical TPBAR transport package should be relatively small. In the case of a TPBAR transport package, however, the total heat load is not particularly important. What is more important is the equilibrium temperature of the consolidated bundle of TPBARS within the containment vessel, since temperature will be the primary driving force for the expected tritium losses from the TPBARs into containment.

Preliminary analyses suggest that the equilibrium temperature should be on the order of ~400 degrees Fahrenheit (°F) (see the related discussions in Sections 3.4.5.2, 4.4.3, and 7.4.3 below).

Table E3-1 Decay Heat in a TPBAR (Watts/TPBAR)

Nuclide	7 Days	30 Days	90 Days	180 Days	1 Year	5 Years	10 Years
^{3}H[a]	3.90E-01	3.89E-01	3.85E-01	3.80E-01	3.69E-01	2.95E-01	2.23E-01
^{32}P	1.04E-02	3.42E-03	1.87E-04	2.38E-06	3.06E-10	5.86E-12	5.83E-12
^{51}Cr	2.07E-01	1.17E-01	2.60E-02	2.74E-03	2.66E-05	3.57E-21	5.10E-41
^{54}Mn	2.09E-01	1.98E-01	1.73E-01	1.42E-01	9.42E-02	3.69E-03	6.42E-05
^{55}Fe	7.28E-03	7.15E-03	6.85E-03	6.41E-03	5.60E-03	1.93E-03	5.08E-04
^{59}Fe	1.54E-01	1.08E-01	4.28E-02	1.07E-02	6.16E-04	1.04E-13	6.30E-26
^{58}Co	1.61E+00	1.29E+00	7.14E-01	2.96E-01	4.82E-02	2.94E-08	5.03E-16
^{60}Co	5.55E-01	5.50E-01	5.39E-01	5.21E-01	4.88E-01	2.88E-01	1.49E-01
^{63}Ni	2.30E-03	2.30E-03	2.30E-03	2.30E-03	2.29E-03	2.22E-03	2.14E-03
^{76}As	7.74E-03	3.76E-09	1.28E-25	0.00E+00	0.00E+00	0.00E+00	0.00E+00
^{95}Zr	3.33E-01	2.60E-01	1.36E-01	5.11E-02	6.87E-03	9.18E-10	2.35E-18
^{95}Nb	3.32E-01	3.12E-01	2.13E-01	9.53E-02	1.41E-02	1.93E-09	4.93E-18
^{99}Mo	5.40E-02	1.64E-04	4.44E-11	6.24E-21	0.00E+00	0.00E+00	0.00E+00
^{117m}Sn	1.52E-02	4.88E-03	2.50E-04	2.91E-06	3.03E-10	0.00E+00	0.00E+00
^{119m}Sn	4.35E-03	4.08E-03	3.44E-03	2.67E-03	1.58E-03	2.53E-05	1.45E-07
^{125}Sn	1.46E-02	2.79E-03	3.73E-05	5.77E-08	9.47E-14	0.00E+00	0.00E+00
^{125}Sb	5.23E-03	5.20E-03	5.00E-03	4.70E-03	4.14E-03	1.52E-03	4.35E-04
^{182}Ta	9.55E-02	8.31E-02	5.79E-02	3.36E-02	1.10E-02	1.65E-06	3.42E-11
^{183}Ta	1.61E-01	7.08E-03	2.03E-06	9.91E-12	1.15E-22	0.00E+00	0.00E+00
Total	4.19E+00	3.35E+00	2.31E+00	1.55E+00	1.05E+00	5.92E-01	3.75E-01

[a] The ORIGEN2 values for H-3 are not reported. The values given for H-3 are based on a maximum of 1.2 g of tritium per TPBAR at discharge, as specified in Lopez 2003. There is 0.325 W per gram of tritium, and the half-life of tritium is 12.33 years. The value of 1.2 g at discharge is decayed appropriately for the various decay times. Source: PNNL, 2004.

3.4.5 Thermal Evaluation under Normal Conditions of Transport

3.4.5.2 Maximum Normal Operating Pressure

For TPBAR transport packages, the maximum normal operating pressure (MNOP) at the estimated temperature of about 400 °F should be in the range of 1 to 2 atmospheres, plus any additional pressure generated due to tritium in-leakage/permeation. It should be noted, however, that, based on the information presented in Section 4.4.3.1 below, tritium in-leakage/permeation is only expected to range between 7.6×10^{-6} and 5.2×10^{-3} moles of tritium per year, for intact TPBARs (see Table E.4-1). As such, the additional pressure generated due to tritium in-leakage/permeation would likely be a second-order correction.

The requirement that tritium (as hydrogen) makes up less than 5 percent of the gas for flammability regulations is also satisfied because, as is shown above, the contribution of tritium (as hydrogen) as a flammable gas can be expected to be small. In addition, it should also be noted that any tritium that escapes from intact TPBARs will be rapidly converted to tritiated

water vapor (HTO).[2] As tritiated water vapor, the available tritium (i.e., as HTO) is already oxidized and, therefore, is no longer flammable. As yet a third layer of conservatism, the reviewer should verify that, as part of the loading process, the package will be vacuum dried and backfilled with an inert gas, in accordance with the generic procedures outlined in the Pacific Northwest National Laboratory (PNNL) document, "Evaluation of Cover Gas Impurities and Their Effects on the Dry Storage of LWR Spent Fuel" (Knoll and Gilbert, 1987). This should be verified as part of the operating procedures review.

For those situations where the tritium released into containment might be substantially greater than that described above, such as the total failure of one (or more) TPBARs, with the loss of up to 100 percent of inventory per TPBAR, the reviewer should verify that the tritium concentration in any void volume of the containment will be less than 5 percent, by volume, over the standard shipping time of 1 year.

One additional factor that must be considered is a possible change in the thermal properties of the backfill gas. As a first approximation, it should be assumed that the thermal properties of tritium are virtually identical to those of hydrogen. Likewise, it should also be assumed that the thermal properties of HTO are virtually identical to those of normal water vapor (H_2O). As long as the tritium losses into containment are small, such as those described above (i.e., between 7.6×10^{-6} and 5.2×10^{-3} moles of tritium per year), changes to the thermal properties of the backfill gas would likely be negligible. As the estimated tritium losses into containment get larger, such as those described below in Section 4.4.3 (i.e., on the order of ~0.2 moles of tritium, or more), the reviewer should verify that the applicant has provided the appropriate calculations (1) using the assumption of 100 percent tritium (as hydrogen) gas and (2) using the assumption of 100 percent HTO. The worst-case situation can then be determined, and verified, by the reviewer.

3.4.6 Thermal Evaluation under Hypothetical Accident Conditions

3.4.6.3 Maximum Temperatures and Pressures

As an absolute, worst-case condition, the reviewer should assume that all TPBARs fail, with the loss of up to 100 percent of the total tritium inventory. This would be equivalent to a total loss of ~3.46×10^{6} Ci, or ~60 moles of tritium.

As a first approximation, the estimated temperature of the TPBARs and the surrounding gas should be about 400 °F.

As for possible changes to the thermal properties of the backfill gas, the reviewer should again verify that the applicant has provided the appropriate calculations (i) using the assumption of 100-percent tritium (as hydrogen) gas, and (ii) using the assumption of 100-percent HTO. The worst-case situation can then be determined, and verified, by the reviewer.

3.6 <u>References</u>

---

[2] Chemically, the term "HTO" is used to describe tritiated water vapor (see Attachment A to this appendix). While that may be more favorable from a transportation perspective, it is not nearly as favorable from a health and safety perspective because HTO is, by far, more hazardous than tritium gas (i.e., HT or T_2). (See Attachment B to this appendix.)

Knoll, R.W., and E.R. Gilbert, “Evaluation of Cover Gas Impurities and Their Effects on the Dry Storage of LWR Spent Fuel,” PNL-6365, Pacific Northwest National Laboratory, Richland, Washington, November 1987.

Lopez, A., Jr., 2003, “Production TPBAR Design Inputs for Watts Bar (U),” PNNL-TTQP-1-702, Rev. 9., Pacific Northwest National Laboratory, Richland, Washington.

Pacific Northwest National Laboratory (PNNL), Tritium Technology Program, “Unclassified Bounding Source Term, Radionuclide Concentrations, Decay Heat, and Dose Rates for the Production TPBAR,” TTQP-1-111, Revision 4, September 16, 2004.

U.S. Nuclear Regulatory Commission, “Safety Evaluation by the Office of Nuclear Reactor Regulation Related to Amendment No. 40 to Facility Operating License No. NPF-90 Tennessee Valley Authority Watts Bar Nuclear Plant, Unit I Docket No. 50-390,” September 23, 2002. (See, in particular, Section 2.10.6.) Note: This particular document was included as Enclosure 2 of a letter from L.M. Padovan (NRC) to J.A. Scalice (TVA), September 23, 2002, Subject: Watts Bar Nuclear Plant, Unit 1-Issuance of Amendment to Irradiate up to 2,304 Tritium-Producing Burnable Absorber Rods in the Reactor Core (TAC NO. MB 1884), ADAMS Accession No. ML022540925.

4 Containment Evaluation

4.4 Review Procedures

This section considers each of the subsections of Section 4.4 (Review Procedures) of Chapter 4 of this SRP and highlights the special considerations or attention needed for TPBAR transport packages. In subsections where no significant differences were found, that particular subsection has been omitted from this section.

See Chapter 4, Figure 4-1, of this SRP for the interrelationship between the review of the containment evaluation and the other chapter reviews.

4.4.1 Description of the Containment System

4.4.1.1 Containment Boundary

Materials of Construction

For high-purity tritium containment systems, high-pressure tritium containment systems, and systems where the internal surfaces will be exposed to such environments, 300-series stainless steels are preferred over virtually all other materials. It should also be noted that, for welded assemblies, it is advisable to use only the low-carbon grades (e.g., 304L, 316L) to reduce susceptibility to intergranular corrosion or intergranular-stress-corrosion cracking.

For the shipment of irradiated TPBARs, however, where the internal surfaces of the containment vessel are not expected to see high-purity or high-pressure-tritium environments, the use of other types of stainless steels is acceptable as long as (i) the material in question has the appropriate structural properties, (ii) the material in question is an accepted ASME B&PV Code, Section III material, and (iii) additional inspection requirements are imposed, as part of the maintenance program requirements, to guard against long-term problems such as

intergranular corrosion or intergranular-stress-corrosion cracking (see also the related discussions in Sections 7.4.3, below).

Welds

Special precautions should be taken to control and qualify weld materials, weld processes, welding procedures, and welders, as appropriate, for the material selected for the containment vessel body and lid. Additional precautions should also be taken to note that the appropriate followup procedures have been added to long-term maintenance requirements for the packaging, again, to guard against long-term problems such as intergranular corrosion or intergranular-stress-corrosion cracking. (See Table 2 of Monroe and Sears 1984 for a summary of welding criteria that is based on the requirements of the ASME Boiler and Pressure Vessel Code. See also Section 9.4.2.3, below.)

Seals

The generic rule of thumb for any tritium-handling system is that elastomeric seals[3] are not acceptable for use in any part of the containment boundary. This includes (i) the use of elastomeric seals between the containment vessel body and lid, (ii) the use of elastomeric seals for any valve stem tip/valve seat combinations that might be part of the containment boundary, such as vent- and drain-port valves, and (iii) the use of elastomeric seals between the containment vessel body and the vent- and drain-port covers, when the vent- and drain-port covers are part of the containment boundary. The primary reason for this general prohibition on the use of elastomeric seals can be traced, in part, to permeation issues and, in part, to the requirements of American National Standards Institute (ANSI) N14.5 (INMM, 2014):

> Permeation is the passage of a fluid through a solid barrier...by adsorption-diffusion-desorption processes. It should not be considered as leakage or a release unless the fluid itself is hazardous or radioactive. If this is the case, the container boundary must reduce the permeation to an acceptable level.

Since the permeation rate of tritium through most elastomers is about two orders of magnitude higher than that allowed by regulatory limits, the use of elastomeric seals cannot be allowed (see the additional information presented in Attachment A, Sections A.7 and A.8, to this appendix).

The use of elastomers and elastomeric seals is also discouraged for valve stem tip/valve seat combinations in those situations where the vent- and drain-port valves might become part of the containment boundary and in any situation where the surface of the elastomer might be wetted with tritium. In this case, however, the general prohibition stems from the chemical and physical properties of tritium, and from the tendency of tritium to form undesirable chemical byproducts, which can lead to the long-term degradation of the containment boundary (see Sections A.7 and A.8).

[3] For purposes of this document, the term “elastomeric seal” pertains equally to organic, elastomeric, halogenated hydrocarbon, thermoplastic resin, and thermosetting resin types of seals. See Attachment A to this appendix.

The preferred methods for sealing systems that are designed to contain tritium are through the use of all-welded construction. When the use of all-welded construction is not realistic, such as the containment boundary seal areas for transportation packages with bolted closures, the use of metal seals and/or metallic O-rings is recommended.

4.4.2 General Considerations

4.4.2.2 Type B Packages

Type B packages must satisfy the quantified release rates in Title 10 of the *Code of Federal Regulations* (10 CFR) 71.51, "Additional Requirements for Type B Packages." As noted in Regulatory Guide 7.4, "Leakage Tests on Packages for Shipment of Radioactive Material," an acceptable method for satisfying these requirements is provided in ANSI N14.5. Additional information for the determination of containment criteria is discussed below and in NUREG/CR-6487, "Containment Analysis for Type B Packages Used to Transport Various Contents," issued November 1996.

4.4.2.3 Combustible-Gas Generation

As is noted above in Section 3.4.5.2, the bulk of the gases released from irradiated TPBARs under normal conditions of transport will be released as HTO,[4] or tritiated water vapor. As tritiated water vapor, the available tritium (i.e., as HTO) is already oxidized and, therefore, is no longer flammable. An additional layer of conservatism is added, and the reviewer should verify that, as part of the loading process, the package will be vacuum dried and backfilled with an inert gas, in accordance with the generic procedures outlined in the PNNL document, "Evaluation of Cover Gas Impurities and Their Effects on the Dry Storage of LWR Spent Fuel" (Knoll and Gilbert, 1987). For normal conditions of transport, therefore, with no unexpected TPBAR failures (see below), there should be no possibility for the formation of a combustible-gas mixture inside the containment boundary.

For those situations where the tritium released into containment might be substantially greater than that described above, such as the total failure of one (or more) TPBARs, with the loss of up to 100 percent of inventory per TPBAR, the reviewer should verify that the tritium concentration in any void volume of the containment will be less than 5 percent, by volume, over the standard shipping time of 1 year.

Under hypothetical accident conditions, the situation can change, in that the tritium concentrations, as T_2 or HT, could be relatively high. In this case, however, a monitoring technique is discussed briefly in Section 8.4.1.2 of this appendix that can be used to determine the actual tritium concentration inside containment, which, on an as-needed basis, can also be used to determine potential flammability levels of the gases inside containment.

4.4.3 Containment under Normal Conditions of Transport

---

[4] Chemically, the term "HTO" is used to describe tritiated water vapor (see Attachment A to this appendix). While that may be more favorable from a transportation perspective, it is not nearly as favorable from a health and safety perspective, because HTO is, by far, more hazardous than tritium gas (i.e., HT or T_2) (see Attachment B to this appendix).

4.4.3.1 Type B Transportation Packages

Release calculations for a package intended for shipment of content containing tritium would be dependent on the source term associated with tritium and the dispersible radioactive solids that might be entrained with the tritium. Verify that the applicant's analysis justifies release fractions and source terms for both sources. The determination of the source term for the available radioactive solids may refer, with appropriate justification, to the information provided by PNNL, who is the design agency for TBPARs (PNNL, 2004a). Although a separate supporting document (PNNL, 2004b) provided some estimates for potential tritium release rates, as discussed below, there are a number of reasons why these estimates are not appropriate for containment release calculations. Unless release fractions and source terms can be justified, packages for shipment of tritium should be designed to meet the ANSI N14.5 definition of "leaktight." The adoption of the leaktight criterion eliminates the applicant's need to perform release calculations.

Information Related to Tritium Releases Described in PNNL 2004a, 2004b

References PNNL 2004a and PNNL 2004b provide some estimates for potential release rates associated with TPBARs; information presented in Table E.4-1 was adapted from PNNL 2004b. A review of these estimates suggests that it would be difficult, if not impossible, to determine an actual source term to be used for the determination of an allowable release rate for a package to be used for the shipment of TPBARs. A review of the information in the PNNL documents is worthwhile, however, because the estimates provided can be used to determine the condition of the TPBARs after they have been consolidated [5] and after they have been loaded into the containment vessel. (Note: The release estimates cited below in Table E.4-1 are the actual design criteria for both (i) the standard TPBAR design, and (ii) the full-length TPBAR design, respectively; see Section 1.4.2.3 of this appendix.)

<u>TPBAR Containment System Design Criteria, Intact TPBARs</u>

Under the broader heading of normal conditions of transport, the design agency's estimate of <0.05 millicuries per hour (mCi/hr) for 1,200 or fewer TPBARs (shown in the first column of Table E.4-1) is actually not appropriate for use as a source term for the releasable tritium, because the temperature estimates for the TPBARs in a consolidated bundle of up to 300 TPBARs should be more on the order of ~400 °F (see Section 3.4.1 of this appendix). This information points out an operational fact that there *will* be permeation losses from the TPBARs, under normal conditions of transport, and that these permeation losses *will* be going directly into containment.

The estimate provided by the design agency of <0.05 mCi/hr for the consolidated contents (i.e., up to 300 TPBARs) further equates to ~8.40 mCi/week and, for MNOP determination timeframes, ~437 mCi/yr, or ~7.6×10^{-6} moles of tritium gas per year. At the permeation rate cited in this case, all the tritium would rapidly be converted to HTO as soon as it is released, and combustible-gas generation issues will not be an issue (see Section 3.4.5.2, above, and Sections A.5 and A.6, below).

---

[5] Additional information on "consolidation" and the "pre-shipment "and "post-shipment" measurements is provided in Sections 8.4.1.2 and 8.4.1.3 of this appendix.

Table E4-1 Summary of Tritium Release Assumptions for Transportation Scenarios

Intact TPBARs (Normal Conditions of Transport)		Event-Failed TPBARs (Hypothetical Accident Conditions)		TPBARs Pre-Failed In-Reactor	
<200 °F	200 °F to 650 °F	Ambient to <200 °F	200 °F to 650 °F	Ambient to <200 °F	>200 °F
<0.05 mCi per hour for 1,200 or fewer TPBARs	<0.12 mCi per TPBAR per hour (based on average TPBAR in the core)	<0.1 Ci per TPBAR per hour, not to exceed 1% of the pellet tritium inventory	<55 Ci total per TPBAR	<0.1 Ci per TPBAR per hour	Up to 100% of inventory

Source: PNNL, 2004b.

The design agency's estimate of <0.12 millicuries per TPBAR per hour (mCi/(TPBAR-hr)) in the second column of Table E.4-1 is not really appropriate either, because it is a simple data-reduction value for the reactor in-core estimated permeation releases. The design agency has stated that, for intact TPBARs, "The in-reactor design tritium release rate for TPBARs is less than 1,000 Ci per 1,000 rods per year. The in-reactor design tritium release rate should be used on a core-averaged basis. This release rate should not be applied as a limit for individual TPBARs" (PNNL, 2004b). Additional supporting documentation added further clarification:

> The TPBARs were designed such that permeation through the cladding would be less than 1.0 Ci/TPBAR/year. For the production design, this value is reported as "less than 1000 Ci/1000 TPBAR/year." While the value of the permeation is not changed..., the new units of reporting emphasize that the release is based on the core average. Thus, while an individual TPBAR may release more than 1 Ci/year, the total release for 1,000 TPBARs will be less than 1,000 Ci/year. [WEC, 2001]

Although a value of <0.12 mCi/(TPBAR-hr) may not be useful as a source term for transportation purposes, it does serve a useful operational purpose, because, like the estimate provided for the first column of Table E.4-1, it does provide a second data point toward the determination of possible tritium permeation losses into containment.

As has already been noted, a value of <0.12 mCi/(TPBAR-hr) translates to ~20.2 mCi/(TPBAR·week) and, for MNOP purposes, to ~1 Ci/(TPBAR-yr). For consolidated shipments of up to 300 TPBARs, this further translates to ~300 curies per year (Ci/yr), or ~5.2×10^{-3} moles of tritium gas per year, going into containment. Again, at the permeation rate cited in this case, all the tritium would rapidly be converted to HTO—see Section 3.4.4.2 and Attachment A to this appendix—as soon as it was released, so combustible-gas generation should not be an issue.

TPBAR Containment System Design Criteria, TPBARs Pre-Failed In-Reactor[6]

For those situations where the tritium released into containment might be substantially greater than that described in either of the situations noted above, such as the total failure of one (or more) TPBARs, two different scenarios are listed in Table E.4-1 under the heading "TPBARs Pre-Failed In-Reactor": (i) where the temperature estimate is ambient to <200 °F, and (ii) where the temperature estimate is >200 °F. Both situations should be considered under the broader heading of normal conditions of transport. However, because the estimated equilibrium temperature of the TPBARs under normal conditions of transport is expected to be closer to 400 °F, the >200 °F scenario is both bounding, and more realistic, and the ambient to <200 °F scenario need not be considered any further.

Under the far-right column in Table E.4-1, the potential loss of up to 100 percent of the inventory per TPBAR represents an addition to the source term that should be used for estimating the total tritium losses into containment for normal conditions of transport. As a bounding value, this represents an additional loss of 1.2 grams, 11,543 Ci, or ~0.20 moles of tritium gas, per TPBAR, going into containment. Since the possibility that some of the losses may not be fully converted to HTO cannot be ruled out in this case, it should; therefore, be assumed that some of the losses from the TPBAR will be as T_2 and/or HT. The reviewer, therefore, should verify that the combustible-gas (i.e., the tritium) concentration in any void volume of the containment will be less than 5 percent, by volume, over the standard MNOP shipping time of 1 year. Such an assessment should include the possibility that one, or more, TPBARs might fail in this manner, for any given shipment.

4.4.4 Containment Under Hypothetical Accident Conditions

4.4.4.1 Type B Transportation Packages

For hypothetical accident conditions, verify that the applicant's containment criterion is based on being leaktight, as defined by ANSI N14.5, or is based on a bounding-release calculation, which would include the assumption of a total tritium loss, along with the assumption of the aerosol losses from the activation products. Review and verify that the applicant has justified all assumptions and calculations for the source term. Verify that the structural and thermal sections of the application show that there will be no unexpected deformation in the area around the containment seals as a result of the hypothetical accident condition testing requirements, and that the hypothetical accident condition temperature requirements will not compromise containment boundary seals.

TPBAR Containment System Design Criteria, Event-Failed TPBARs[7]

---

6 By definition, the term "pre-failed in-reactor" is intended to address the possibility of a TPBAR weld failure that occurs just before the TPBARs are unloaded from the reactor core. A normal conditions-of-transport situation, this scenario further assumes that the TPBAR in question becomes waterlogged prior to being consolidated with the other TPBARs, and prior to being loaded into the transport package. Between the chemical reactions that would be expected to occur between the water and the internal components of the TPBAR, and the expected increase in temperature, the TPBARs in question would be expected to lose up to 100 percent of their inventory (PNNL, 2004b).

7 By definition, the term "event-failed TPBARs" is intended to address the performance of the TPBARs subjected to the conditions during, and after, the hypothetical accident conditions.

Two different scenarios are listed in Table E.4-1 under the heading of "Event-Failed TPBARs": (i) where the temperature estimate is ambient to <200 °F, and (ii) where the temperature estimate is >200 °F. Both situations should be considered under the broader heading of hypothetical accident conditions. However, because the estimated equilibrium temperature of the TPBARs under hypothetical accident conditions is expected to be at least 400 °F, the >200 °F scenario is both bounding and more realistic, and the ambient to <200 °F scenario need not be considered any further.

The design agency's estimate of <55 Ci/TPBAR, in the second column under the heading of "Event-Failed TPBARs," leads to a total estimated loss of up to 16,500 Ci, or ~0.28 moles of tritium gas, going directly into containment, for consolidated shipments of up to 300 TPBARs.

To calculate the releasable source term for tritium under hypothetical accident conditions, therefore, three different tritium components would have to be considered: (i) the total amount of tritium that had previously been determined above, under normal conditions of transport (see Section 4.4.3.1, for intact TPBARs), (ii) the total amount of tritium that had previously been determined above, again, under normal conditions of transport (see Section 4.4.3.1, for the pre-failed in-reactor release scenario), and (iii) the total amount of tritium that has just been determined above for hypothetical accident conditions. Should an applicant choose to provide a release calculation rather than design and test the containment boundary to a leaktight criterion, the reviewer should verify that the releasable source term for tritium under hypothetical accident conditions includes all three components. As noted in Section 4.4.3.1, the values provided in Table E.4-1 may not be appropriate for determining the releases at normal conditions of transport.

4.4.5 Leakage Rate Tests for Type B Packages

The packaging used for the shipment of irradiated TPBARs is assumed to be an existing, modified, or newly designed spent fuel transportation package. Therefore, there would not be any fundamental difference from the requirements, and the methodology, used for the fabrication leakage tests for spent fuel packagings. The same cannot be said for packagings used for the shipment of irradiated TPBARs with respect to the maintenance, periodic, and pre-shipment leakage tests, because once a package has been used for the shipment of irradiated TPBARs, the internal surfaces of the package will have been contaminated with tritium. Thus, the procedures used for the maintenance, periodic, and pre-shipment leakage tests will have additional considerations because once the internal surfaces of the package have been contaminated with tritium, it can only be assumed that the internal surfaces will always be contaminated with tritium for the package's time in service. Additional precautions will, therefore, have to be built into the procedures used for the maintenance, periodic, and pre-shipment leakage tests. Further discussion of leakage tests of packages with tritium content is found in Sections 4.4.3.1 and 4.4.4.1 of this appendix, which mentions a leaktight acceptance criterion (as defined by ANSI-N14.5) and closed-loop measurements (described in Appendix E, Section 8.4.1.2). Likewise, for post-hypothetical accident conditions situations, should they become necessary, the closed-loop measurement technique described in Section 8.4.1.2 also becomes more important, as this is the only way to determine the amount of tritium "at risk," prior to opening the containment vessel.

4.6 References

Monroe, R.E., H.H. Woo, and R.G. Sears, Lawrence Livermore National Laboratory, "Recommended Welding Criteria for Use in the Fabrication of Shipping Containers for Radioactive Materials," NUREG/CR-3019, U.S. Nuclear Regulatory Commission, March 1984.

Institute for Nuclear Materials Management (INMM), American National Standard for Radioactive Materials Leakage–Tests on Packages for Shipment, ANSI N14.5-2014, New York, NY, 2014.

U.S. Nuclear Regulatory Commission (NRC), "Containment Analysis for Type B Packages Used to Transport Various Contents," NUREG/CR-6487, U.S. Government Printing Office, Washington, DC, November 1996.

Knoll, R.W., and E.R. Gilbert, "Evaluation of Cover Gas Impurities and Their Effects on the Dry Storage of LWR Spent Fuel," PNL-6365, Pacific Northwest National Laboratory, Richland, Washington, November 1987.

Pacific Northwest National Laboratory, Tritium Technology Program, "Unclassified Bounding Source Term, Radionuclide Concentrations, Decay Heat, and Dose Rates for the Production TPBAR," TTQP-1-111, Revision 4, September 16, 2004a.

Pacific Northwest National Laboratory, Tritium Technology Program, "Unclassified TPBAR Releases, Including Tritium," TTQP-1-091, Revision 9, May 19, 2004b.

U.S. Nuclear Regulatory Commission, "Leakage Tests on Packages for Shipment of Radioactive Material," Regulatory Guide 7.4, Washington, DC.

Westinghouse Electric Company, LLC, "Implementation and Utilization of Tritium-Producing Burnable Absorber Rods (TPBARs) in Watts Bar Unit I," NDP-00-0344, Revision 1, July 2001. (See, in particular, Section 3.5, "TPBAR Performance.")

5 Shielding Review

5.4 Review Procedures

The shielding evaluation in Section 5.4 of Chapter 5 of this SRP applies to the review of any packaging used for the shipment of irradiated TPBARs. Because TPBARs function in the reactor core like any other burnable poison rods, the shipment of irradiated TPBARs can be expected to take on appropriate shielding considerations of irradiated nonfuel hardware in spent fuel transport packages, as described in Chapter 5 of this SRP.

This section considers each of the subsections of Section 4 (Review Procedures) and highlights special considerations or attention needed for irradiated TPBAR transportation packages. In subsections where no significant differences were found, that particular subsection has been omitted from this section, and the review should be conducted using the procedures described in Chapter 5 of this SRP.

See Chapter 5, Figure 5-1, of this SRP for the interrelationship between the review of the shielding evaluation and the other chapter reviews.

5.4.2 Radioactive Materials and Source Terms

5.4.2.2 Gamma Sources

In general, the review of the gamma source for irradiated TPBARs should follow the guidance provided in Chapter 5 of this SRP. Similar to most other nonfuel hardware (e.g., reactor control components), the gamma source will consist entirely of photons from activated hardware. Because tritium is a low-energy beta emitter, tritium will not contribute to the gamma source term and radiation-exposure rates.[8]

Verify the applicant has determined the estimated maximum gamma source strength and spectrum by an appropriate method (e.g., standard computer codes or hand calculations). Since TPBARs are like other nonfuel hardware that is irradiated with fuel in a reactor core, the method will typically be a depletion code. Review the key parameters described in the application for the applicant's calculation method.

The gamma source term may be calculated using computer codes such as ORIGEN-S (RSICC, 2004).[9] As with any calculations using such codes, the reviewer should follow the guidance provided in Chapter 5 of this SRP to verify that the input parameters the applicant used in the analysis are applicable to the contents described in the application. As stated in Chapter 5, the input parameters to be reviewed include the following:

- types of reactor fuel used in irradiation, burnup and high burnup fuels, enrichment, and cooling time after irradiation
- initial composition and mass of the hardware of irradiated TPBARs, including impurities, such as cobalt-59, resulting in activation products, which are major contributors to dose rates
- spatial and energy variation of the neutron flux during irradiation of TPBARs

The design agency for the TPBARs (PNNL) performed unclassified bounding estimates of radionuclide concentrations and the photon source term for irradiated production TPBARs. Those estimates are reproduced below in Table E.5-1 (PNNL, 2004) and Table E.5-2 (NRC, 2002). According to PNNL 2004, these results bound the irradiation of production TPBARs in any anticipated host reactor. The calculations considered all components of the TPBARs and bound all TPBAR designs, including the full-length getter design. Note that the tritium concentrations in Table E.5-1 are not the results calculated by ORIGEN2 (RSICC, 2002),[10] but rather correspond to the functional requirement of 1.2 grams of tritium (maximum), per TPBAR, corrected for the specified decay times.

---

[8] For purposes of completeness, it should be noted that a continuous spectrum of bremsstrahlung radiation, up to the maximum tritium beta energy of 18.6 kilo electron volts (keV), will be produced as the beta particles are slowed down in the TPBARs. However, for spent fuel packages used for the shipment of TPBARs, only photons exceeding approximately 400 keV will contribute significantly to external radiation levels, so the bremsstrahlung radiation from tritium beta particles may be neglected.

[9] The discussion in Chapter 5 regarding use of codes that are the developer or vendor no longer support, such as ORIGEN 2, also applies to the review for TPBARs.

[10] As noted in a preceding footnote, for calculations in a TPBAR package application, the discussion in Chapter 5 regarding use of codes the developer or vendor no longer support, such as ORIGEN 2, applies.

Table E5-1 Maximum Radionuclide Concentrations in a TPBAR (Ci/TPBAR)							
Nuclide	**7 Days**	**30 Days**	**90 Days**	**180 Days**	**1 Year**	**5 Years**	**10 Years**
^{3}H	1.16E+04	1.15E+04	1.14E+04	1.13E+04	1.10E+04	8.76E+03	6.61E+03
^{14}C	1.42E-03	1.42E-03	1.42E-03	1.42E-03	1.42E-03	1.42E-03	1.42E-03
^{24}Na	1.98E-02	1.65E-13	0.00E+00	0.00E+00	0.00E+00	0.00E+00	0.00E+00
^{32}P	1.03E+00	3.38E-01	1.84E-02	2.35E-04	3.02E-08	5.78E-10	5.75E-10
^{35}S	1.37E-02	1.15E-02	7.15E-03	3.52E-03	8.18E-04	8.22E-09	4.65E-15
^{37}Ar	3.79E-01	2.40E-01	7.32E-02	1.23E-02	3.15E-04	8.74E-17	1.76E-32
^{39}Ar	9.49E-03	9.49E-03	9.48E-03	9.48E-03	9.46E-03	9.37E-03	9.25E-03
^{42}K	2.18E-04	8.34E-12	8.31E-12	8.27E-12	8.18E-12	7.52E-12	6.77E-12
^{41}Ca	7.51E-05	7.51E-05	7.51E-05	7.51E-05	7.51E-05	7.51E-05	7.51E-05
^{45}Ca	3.13E-01	2.84E-01	2.20E-01	1.50E-01	6.82E-02	1.37E-04	5.78E-08
^{47}Ca	1.57E-04	4.66E-06	4.86E-10	5.17E-16	2.62E-28	0.00E+00	0.00E+00
^{46}Sc	8.20E-03	6.78E-03	4.13E-03	1.96E-03	4.24E-04	2.39E-09	6.57E-16
^{47}Sc	5.68E-04	1.76E-05	1.86E-09	1.98E-15	1.00E-27	0.00E+00	0.00E+00
^{51}Cr	9.67E+02	5.44E+02	1.21E+02	1.28E+01	1.24E-01	1.66E-17	2.38E-37
^{54}Mn	4.19E+01	3.98E+01	3.48E+01	2.85E+01	1.89E+01	7.41E-01	1.29E-02
^{55}Fe	2.15E+02	2.12E+02	2.03E+02	1.90E+02	1.66E+02	5.71E+01	1.51E+01
^{59}Fe	1.98E+01	1.39E+01	5.52E+00	1.38E+00	7.96E-02	1.34E-11	8.14E-24
^{58}Co	2.69E+02	2.15E+02	1.19E+02	4.95E+01	8.06E+00	4.92E-06	8.41E-14
^{60}Co	3.60E+01	3.57E+01	3.49E+01	3.38E+01	3.16E+01	1.87E+01	9.68E+00
^{59}Ni	1.68E-01	1.68E-01	1.68E-01	1.68E-01	1.68E-01	1.68E-01	1.68E-01
^{63}Ni	2.29E+01	2.29E+01	2.28E+01	2.28E+01	2.27E+01	2.20E+01	2.12E+01
^{66}Ni	1.52E-04	1.38E-07	1.59E-15	1.97E-27	0.00E+00	0.00E+00	0.00E+00
^{64}Cu	1.27E-03	1.04E-16	0.00E+00	0.00E+00	0.00E+00	0.00E+00	0.00E+00
^{66}Cu	1.52E-04	1.38E-07	1.59E-15	1.97E-27	0.00E+00	0.00E+00	0.00E+00
^{65}Zn	4.13E-03	3.87E-03	3.26E-03	2.52E-03	1.49E-03	2.34E-05	1.31E-07
^{76}As	8.74E-01	4.25E-07	1.44E-23	0.00E+00	0.00E+00	0.00E+00	0.00E+00
^{75}Se	8.88E-01	7.77E-01	5.49E-01	3.26E-01	1.12E-01	2.38E-05	6.13E-10
^{82}Br	1.14E-03	2.25E-08	1.18E-20	0.00E+00	0.00E+00	0.00E+00	0.00E+00
^{89}Sr	7.51E-02	5.48E-02	2.40E-02	6.99E-03	5.49E-04	1.07E-12	1.39E-23
^{89m}Y	5.48E-04	4.18E-06	1.24E-11	6.39E-20	0.00E+00	0.00E+00	0.00E+00
^{90}Y	5.14E-01	1.30E-03	1.38E-06	1.37E-06	1.36E-06	1.23E-06	1.09E-06
^{91}Y	1.92E-01	1.46E-01	7.19E-02	2.47E-02	2.76E-03	8.38E-11	3.36E-20
^{89}Zr	5.49E-04	4.18E-06	1.25E-11	6.40E-20	5.60E-37	0.00E+00	0.00E+00
^{93}Zr	1.13E-04	1.13E-04	1.13E-04	1.13E-04	1.13E-04	1.13E-04	1.13E-04
^{95}Zr	6.57E+01	5.12E+01	2.67E+01	1.01E+01	1.36E+00	1.81E-07	4.63E-16
^{97}Zr	1.12E-01	1.65E-11	0.00E+00	0.00E+00	0.00E+00	0.00E+00	0.00E+00
^{92}Nb	3.04E-01	6.34E-02	1.06E-03	2.28E-06	7.41E-12	0.00E+00	0.00E+00
^{93m}Nb	3.68E-06	4.02E-06	4.87E-06	6.15E-06	8.73E-06	2.69E-05	4.49E-05
^{94}Nb	4.76E-04	4.76E-04	4.76E-04	4.76E-04	4.76E-04	4.76E-04	4.76E-04
^{95}Nb	6.93E+01	6.50E+01	4.45E+01	1.99E+01	2.94E+00	4.02E-07	1.03E-15
^{95m}Nb	4.80E-01	3.80E-01	1.98E-01	7.48E-02	1.01E-02	1.34E-09	3.44E-18
^{96}Nb	1.20E-03	9.19E-11	2.51E-29	0.00E+00	0.00E+00	0.00E+00	0.00E+00
^{97}Nb	1.13E-01	1.78E-11	0.00E+00	0.00E+00	0.00E+00	0.00E+00	0.00E+00
^{97m}Nb	1.06E-01	1.57E-11	0.00E+00	0.00E+00	0.00E+00	0.00E+00	0.00E+00

Table E5-1 Maximum Radionuclide Concentrations in a TPBAR (Ci/TPBAR) (cont.)							
Nuclide	**7 Days**	**30 Days**	**90 Days**	**180 Days**	**1 Year**	**5 Years**	**10 Years**
^{93}Mo	1.04E-03	1.04E-03	1.04E-03	1.04E-03	1.04E-03	1.04E-03	1.04E-03
^{99}Mo	1.68E+01	5.11E-02	1.38E-08	1.94E-18	0.00E+00	0.00E+00	0.00E+00
^{99}Tc	4.35E-05	4.36E-05	4.36E-05	4.36E-05	4.36E-05	4.36E-05	4.36E-05
^{103}Ru	3.21E-03	2.14E-03	7.41E-04	1.52E-04	5.76E-06	3.67E-17	3.71E-31
^{115}Cd	2.91E-04	2.27E-07	1.78E-15	1.23E-27	0.00E+00	0.00E+00	0.00E+00
^{115m}Cd	1.84E-04	1.28E-04	5.05E-05	1.25E-05	7.00E-07	9.62E-17	4.52E-29
^{113m}In	1.31E+00	1.14E+00	7.94E-01	4.62E-01	1.51E-01	2.28E-05	3.83E-10
^{114}In	1.26E-01	9.13E-02	3.94E-02	1.12E-02	8.36E-04	1.10E-12	8.64E-24
^{114m}In	1.32E-01	9.54E-02	4.12E-02	1.17E-02	8.73E-04	1.15E-12	9.03E-24
^{113}Sn	1.31E+00	1.14E+00	7.93E-01	4.61E-01	1.51E-01	2.28E-05	3.82E-10
^{117m}Sn	8.21E+00	2.63E+00	1.35E-01	1.57E-03	1.64E-07	0.00E+00	0.00E+00
^{119m}Sn	8.42E+00	7.89E+00	6.66E+00	5.16E+00	3.06E+00	4.90E-02	2.80E-04
^{121}Sn	7.39E-02	4.66E-08	3.12E-24	0.00E+00	0.00E+00	0.00E+00	0.00E+00
^{121m}Sn	5.54E-04	5.53E-04	5.52E-04	5.50E-04	5.46E-04	5.17E-04	4.82E-04
^{123}Sn	4.78E-01	4.22E-01	3.06E-01	1.89E-01	6.99E-02	2.75E-05	1.52E-09
^{125}Sn	2.20E+00	4.21E-01	5.63E-03	8.71E-06	1.43E-11	0.00E+00	0.00E+00
^{122}Sb	1.10E-01	2.99E-04	6.12E-11	5.66E-21	0.00E+00	0.00E+00	0.00E+00
^{124}Sb	1.86E-02	1.43E-02	7.16E-03	2.54E-03	3.01E-04	1.49E-11	1.10E-20
^{125}Sb	1.67E+00	1.66E+00	1.60E+00	1.50E+00	1.32E+00	4.87E-01	1.39E-01
^{126}Sb	5.64E-02	1.56E-02	5.45E-04	3.55E-06	1.13E-10	0.00E+00	0.00E+00
^{123m}Te	3.02E-03	2.65E-03	1.87E-03	1.11E-03	3.80E-04	8.02E-08	2.05E-12
^{125m}Te	3.26E-01	3.40E-01	3.58E-01	3.56E-01	3.22E-01	1.19E-01	3.40E-02
^{131}Cs	5.10E-02	2.34E-02	1.17E-03	7.33E-06	1.50E-10	0.00E+00	0.00E+00
^{131}Ba	3.68E-02	9.53E-03	2.81E-04	1.43E-06	2.69E-11	0.00E+00	0.00E+00
^{133}Ba	7.43E-04	7.40E-04	7.32E-04	7.20E-04	6.97E-04	5.38E-04	3.90E-04
^{133m}Ba	3.65E-05	1.95E-09	1.39E-20	2.26E-37	0.00E+00	0.00E+00	0.00E+00
^{135m}Ba	2.77E-04	4.49E-10	3.51E-25	0.00E+00	0.00E+00	0.00E+00	0.00E+00
^{140}La	3.92E-04	1.86E-07	6.07E-09	4.62E-11	2.02E-15	0.00E+00	0.00E+00
^{177}Lu	2.13E-03	1.99E-04	1.57E-06	7.79E-07	3.40E-07	4.95E-10	1.40E-13
^{175}Hf	3.25E-02	2.59E-02	1.43E-02	5.86E-03	9.37E-04	4.88E-10	6.84E-18
^{181}Hf	8.82E-01	6.06E-01	2.27E-01	5.22E-02	2.52E-03	1.07E-13	1.15E-26
^{182}Ta	1.07E+01	9.33E+00	6.50E+00	3.78E+00	1.24E+00	1.85E-04	3.84E-09
^{183}Ta	2.54E+01	1.12E+00	3.21E-04	1.56E-09	1.82E-20	0.00E+00	0.00E+00
^{181}W	5.88E-03	5.16E-03	3.66E-03	2.19E-03	7.58E-04	1.78E-07	5.17E-12
^{185}W	2.09E-01	1.69E-01	9.69E-02	4.22E-02	7.64E-03	1.06E-08	5.09E-16
^{187}W	2.68E-02	2.99E-09	2.18E-27	0.00E+00	0.00E+00	0.00E+00	0.00E+00
^{188}W	1.65E-02	1.31E-02	7.22E-03	2.94E-03	4.62E-04	2.12E-10	2.54E-18
^{186}Re	3.18E-02	4.66E-04	7.70E-09	5.16E-16	8.85E-31	0.00E+00	0.00E+00
^{188}Re	1.79E-02	1.33E-02	7.29E-03	2.97E-03	4.67E-04	2.15E-10	2.57E-18
^{191}Os	4.87E-05	1.73E-05	1.16E-06	2.03E-08	4.86E-12	0.00E+00	0.00E+00
Totals	1.34E+04	1.28E+04	1.21E+04	1.17E+04	1.12E+04	8.86E+03	6.66E+03

Source: PNNL, 2004.

Table E5-2 Maximum Photon Source Term in a TPBAR (Photons/(TPBAR·s))

Energy (MeV)	7 Days	30 Days	90 Days	180 Days	1 Year	5 Years	10 Years
1 .00E-02	7.73E+12	5.07E+12	2.33E+12	1.14E+12	6.01E+11	3.17E+11	2.28E+11
2.50E-02	6.71E+11	4.15E+11	2.59E+11	1.76E+11	1.03E+11	1.95E+10	7.02E+09
3.75E-02	1.80E+11	1.08E+11	6.65E+10	3.72E+10	1.85E+10	6.83E+09	2.84E+09
5.75E-02	5.80E+11	4.44E+11	2.90E+11	1.60E+11	5.27E+10	4.20E+09	2.15E+09
8.50E-02	1.52E+11	9.81E+10	5.86E+10	2.93E+10	9.11E+09	1.66E+09	8.49E+08
1.25E-01	2.24E+11	1.41E+11	8.80E+10	4.66E+10	1.45E+10	7.08E+08	3.45E+08
2.25E-01	4.52E+11	2.38E+11	1.20E+11	6.46E+10	2.15E+10	1.30E+09	4.20E+08
3.75E-01	3.06E+12	1.73E+12	4.10E+11	6.55E+10	1.94E+10	6.57E+09	1.90E+09
5.75E-01	2.75E+12	2.17E+12	1.21E+12	5.16E+11	1.02E+11	8.36E+09	2.39E+09
8.50E-01	1.56E+13	1.29E+13	7.83E+12	3.77E+12	1.11E+12	2.70E+10	5.28E+08
1.25E+00	3.05E+12	2.96E+12	2.81E+12	2.63E+12	2.38E+12	1.38E+12	7.16E+11
1.75E+00	5.01E+10	3.96E+10	2.20E+10	9.10E+09	1.48E+09	9.09E+02	5.52E+00
2.25E+00	2.12E+09	3.75E+08	3.27E+07	1.84E+07	1.30E+07	7.33E+06	3.80E+06
2.75E+00	7.48E+08	6.48E+04	5.30E+04	4.48E+04	3.88E+04	2.27E+04	1.18E+04
3.50E+00	5.05E+05	1.88E+00	6.13E-02	4.70E-04	3.16E-06	2.87E-06	2.58E-06
5.00E+00	5.21E+03	5.25E-08	6.64E-09	4.23E-09	1.67E-09	1.11E-12	1.93E-15
7.00E+00	6.37E-10	5.81E-10	4.31E-10	2.75E-10	1.09E-10	7.23E-14	1.25E-16
9.50E+00	4.03E-11	3.68E-11	2.72E-11	1.74E-11	6.87E-12	4.57E-15	7.93E-18
Totals	3.45E+13	2.63E+13	1.55E+13	8.65E+12	4.44E+12	1.78E+12	9.63E+11

Source: Adapted from NRC, 2002.

The photon source terms shown in Table E.5-2 above are given as functions of energy group and decay time (i.e., time since the end of irradiation). Earlier decay times correspond to larger photon source terms; therefore, the photon source term will be conservative if the decay time of the photon source term used in the shielding evaluation is less than the decay time of the TPBARs to be shipped. Because the decay time assumed in the shielding evaluation becomes a condition of approval in the certificate of compliance, the applicant should ensure that the assumed decay time accommodates their required shipping requirements.

According to the information presented in NRC 2002, a decay time of 30 days should be sufficiently conservative for the photon source term in the shielding evaluation, based on the following:

> About 30 days after the refueling is complete, plant operators would begin to remove the remaining irradiated TPBAR assemblies from the spent fuel assemblies, disassemble all of the irradiated TPBARs for consolidation, and place them into consolidation canisters. The time to start consolidating the TPBARs is not limited by any safety issues (e.g., decay heat), but rather is based on scheduling. The 30-day estimate corresponds to when the licensee expects to be finished with all outage-related activities, and can begin consolidation efforts.

5.4.2.3 Neutron Source

This section of the review guidance is not applicable for shipments of irradiated TPBARs, as the TPBARs do not contain fissile materials and do not produce neutrons.

5.4.4 Shielding Evaluation

There should be no significant differences in the methods used to calculate package dose rates or to evaluate the analyses from those methods described in Chapter 5 of this SRP. The one exception is that a minimum cooling time of 30 days should be imposed, in the certificate of compliance, on the shipment of irradiated TPBARs, as is noted in PNNL 2004 and NRC 2002, and the applicant's shielding analyses should use the source term for that cooling time.

5.6 References

Radiation Safety Information Computational Center (RSICC), "SCALE 5: Modular Code System for Performing Standardized Computer Analyses for Licensing Evaluation for Workstations and Personal Computers," Code Package CCC-725, Oak Ridge National Laboratory, June 2004.

Radiation Safety Information Computational Center (RSICC), "ORIGEN2 V2.2: Isotope Generation and Depletion Code Matrix Exponential Method," Code Package CCC-371, Oak Ridge National Laboratory, June 2002.

Pacific Northwest National Laboratory, Tritium Technology Program, "Unclassified Bounding Source Term, Radionuclide Concentrations, Decay Heat, and Dose Rates for the Production of TPBAR," TTQP-1-111, Revision 4, September 16, 2004.

U.S. Nuclear Regulatory Commission, "Safety Evaluation by the Office of Nuclear Reactor Regulation Related to Amendment No. 40 to Facility Operating License No. NPF-90 Tennessee Valley Authority Watts Bar Nuclear Plant, Unit 1 Docket No. 50-390," September 23, 2002. (See, in particular, Section 2.1.1.) Note: This document was included as Enclosure 2 of a letter from L.M. Padovan (NRC), to J.A. Scalice (TVA), dated September 23, 2002, Subject: Watts Bar Nuclear Plant, Unit I Issuance of Amendment to Irradiate up to 2,304 Tritium-Producing Burnable Absorber Rods in the Reactor Core (TAC NO. MB1884), ADAMS Accession No. ML022540925.

6 Criticality Review

6.4.2 Contents

No fissile material contents are associated with the shipment of irradiated TPBARs. There are, therefore, no criticality concerns.

7 Materials Evaluation

7.4 Review Procedures

This section considers each of the subsections of Section 7.4 (Review Procedures) of Chapter 7 of this SRP and highlights the special considerations or attention needed for TPBAR transportation packages. In subsections where no significant differences were found, that particular subsection has been omitted from this section.

See Chapter 7, Figure 7-1, of this SRP for the interrelationship between the review of the materials evaluation and the other chapter reviews.

7.4.2 Weld Design and Inspection

The reviewer should verify that the effects of tritium, as hydrogen, and helium from the decay of tritium, on the fabrication procedures and examination requirements of the containment system have been appropriately considered, assuming that tritium will be released from the irradiated TPBARs.

Components or materials that have been previously exposed to tritium may need special repair procedures and/or post-repair examinations.

Special precautions should be taken to control and qualify weld materials, weld processes, weld procedures, and welders, as appropriate, for the materials selected for the containment body and lid. Additional precautions should also be taken to note that the appropriate followup procedures have been added to long-term maintenance requirements for the packaging, again, to guard against long-term problems such as intergranular corrosion or intergranular-stress-corrosion cracking. See Table 2 of Monroe and Sears 1984 for a summary of welding criteria that are based on the requirements of the ASME B&PV Code.

7.4.3 Mechanical Properties

Verify that the effects of tritium, as hydrogen and as helium from the decay of tritium,[1] on the mechanical properties of the structural, bolting, and seal materials have been appropriately taken into consideration, given the assumption that tritium will be released from the TPBARs (see below; see also Section 4.4.3).

For containment and other components or materials that may be exposed to tritium, the compatibility of the materials with tritium must be evaluated. Tritium can adversely affect the structural integrity of a material directly or indirectly through a third material. An example of a direct effect is the embrittlement (decrease of ductility or elongation, increase of yield strength) of a material by tritium dissolved or diffused into the material. High-strength steels are especially susceptible to this embrittlement effect. An example of indirect effect is described in Attachment A to this appendix. One experiment showed that tritium leached fluorides out of Teflon™ shavings, which subsequently caused stress-corrosion cracking of 316 stainless steel, at high pressures. It is also worth noting that such effects can be highly dependent on both temperature and pressure and are usually greater at higher temperatures and pressures. Temperature and pressure effects notwithstanding, however, it must also be noted that such effects can be exacerbated greatly in the presence of moisture.

Unfortunately, data concerning tritium effects on transport packages are rather limited. The package designer is, therefore, obligated to provide a reasonable and conservative estimate of the tritium environment to which each packaging component may be exposed and a realistic assessment of the potential effects that the tritium environment can have on the properties and structural integrity of each component. The materials reviewer can then determine the significance of the tritium effects to the safety performance of the package. Among all

---

[1] As tritium is an isotope of hydrogen, exposure to tritium can be expected to lead to potential hydrogen embrittlement problems for materials that would normally be susceptible to hydrogen embrittlement. The solubility of tritium, however, can also lead to a phenomenon known as “helium embrittlement,” a phenomenon that occurs when tritium finds its way into the material and decays to helium-3. The helium produced by decay gradually migrates to the grain boundaries of the material in question, leading to localized pressure buildups as a result of the growth of helium bubbles at the grain boundaries. From a materials perspective, therefore, “the effects of tritium, as hydrogen and as helium from the decay of tritium,” are referred to as two different phenomena, and both phenomena must be considered separately. (See also Section A.7 in Attachment A to this appendix.)

packaging components, those that reside inside, or in close proximity to, the containment boundary have a high risk of tritium effects. Therefore, the relation between the tritium contents and the materials of containment shells, welds, closure bolts, seals, etc., should be thoroughly investigated and understood.

For high-purity tritium containment systems, high-pressure tritium containment systems, and systems where the internal surfaces will be exposed to such environments, 300-series stainless steels are preferred over all other steels. It should also be noted that, for welded assemblies, it is advisable to use only the low-carbon grade (e.g., 304L, 316L) to reduce the potential for intergranular corrosion or intergranular-stress-corrosion cracking.

For the shipment of irradiated TPBARs, however, where the internal surfaces of the containment vessel are not expected to see high-purity or high-pressure tritium environments, the use of other types of stainless steel is acceptable, (i) as long as the material in question has the appropriate structural properties, (ii) as long as the material in question is an accepted ASME B&PV Code, Section III material, and (iii) as long as additional inspection requirements are imposed, as part of the maintenance program requirements, to guard against long-term problems, such as intergranular corrosion or intergranular-stress-corrosion cracking. Additional consideration could also be given to limiting the number of times any given package could be used for the shipment of TPBARs. At this point in time, however, no data exist to support such a requirement, and the only way to get these data is through the additional measurements described in Section 8.4.1.2, and the additional inspection requirements noted in Section 9.4.2.3 of this appendix. These additional inspection requirements will be needed for all containment components and materials that are reused for multiple TPBAR shipments.

While it may not be possible to predict the actual amount of tritium that may be released into the containment vessel for any given shipment, the information presented in Section 4.4.3 shows that the design criteria for intact TPBARs is <0.12 mCi/(TPBAR-hr), at temperatures between 200 °F and 650 °F. In addition, the information presented in Section 3.4.1.3 of this appendix shows that the equilibrium temperature for TPBARs during shipment should be about 400 °F. From this, it can be seen that, at a minimum, it should be expected that ~300 Ci of tritium will be released into the containment vessel on an annual basis, as a result of normal permeation losses from intact TPBARs. It should also be expected that some number (one or two) of TPBARs pre-failed in-reactor [2] could be included in each shipment, for an additional estimate of up to 11.5×10^3 Ci/TPBAR (see Section 4.4.3 of this appendix). At a minimum, therefore, it should be assumed that something on the order of 500 Ci of tritium will be released into the containment vessel, on an annual basis, for any given shipment. This does not include the additional assumption of the total failure of one or more TPBARs, with the loss of up to 100 percent of inventory per TPBAR. (See Table E.4-1 and Section 4.4.3.1 of this appendix, respectively.) Using an equilibrium temperature of 400 °F, the materials reviewer can begin to make an estimate of the potential effects that a tritium environment can have on the material properties and the structural integrity of each of the containment vessel components. Caution should be exercised, however, because, as was noted above, no actual data exist to support such a conclusion, and the only way to get the actual data is through the additional measurements described in Section 8.4.1.2 and the additional inspection requirements noted in Section 9.4.2.3.

[2] For a more complete description of TPBARs pre-failed in-reactor, see the discussion in Section 4.4.3.1.

Verify information concerning the accumulation of tritium effects on the materials. Previous exposures to tritium can also affect the repair quality of the affected component. It should be expected that repeated tritium exposures will change the weldability of steels and, thus, the quality of any weld repairs.

7.4.9 Content Reactions

An overview of a variety of reactions that tritium can have with various materials is provided in Attachment A to this appendix. All potential reactions, not limited to those affecting only structural properties, should be evaluated, and their possible effects on the safety performance of the package should be assessed. The reviewer should verify that these reactions with tritium, as hydrogen, and helium from the decay of tritium, and their effects on the structural, bolting, and seal materials have been appropriately considered.

The reviewer should also verify that the materials that constitute the TPBARs (e.g., lithium aluminate, Zircaloy-4) will not have any deleterious chemical, galvanic, or other reactions with the containment vessel materials if the TPBARs are damaged during transportation and storage periods. Because the transport package is to be loaded under water, and because vacuum-drying processes are to be used prior to shipment (see Section 8.4.1.2), the presence of moisture should be included in all such considerations.

7.4.10 Radiation Effects

The reviewer should verify that the damaging effects of radiation from the expected tritium releases from the TPBARs on the structural, bolting, and seal materials have been appropriately considered. Similar to other radioactive materials, tritium can cause degradation or disintegration of plastic materials through radiolysis reactions (see Attachment A to this appendix). However, because of its excellent ability to penetrate materials, tritium can be far more insidious than other radioactive materials. The common practice, as described in Section 4.4.1.1 and in Attachment A, of avoiding the use of elastomeric seals for tritium transport packages is a direct result of such considerations.

7.6 References

Monroe, R.E., H.H. Woo, and R.G. Sears, Lawrence Livermore National Laboratory, “Recommended Welding Criteria for Use in the Fabrication of Shipping Containers for Radioactive Materials,” NUREG/CR-3019, U.S. Nuclear Regulatory Commission, March 1984.

8 Operating Procedures Evaluation

8.4 Review Procedures

This section considers each of the subsections of Section 8.4 (Review Procedures) of Chapter 8 and highlights the special considerations or attention needed for TPBAR transportation packages. In subsections where no significant differences were found, that particular subsection has been omitted from this section.

See Chapter 8, Figure 8-1, of this SRP for the interrelationship between the review of the operating procedures and the other chapter reviews.

8.4.1 Package Loading

The reviewer should verify that, prior to the start of any work with irradiated TPBARs, provisions are in place for the real-time monitoring of tritium in air. The reviewer should also verify that additional provisions are in place for the sampling of tritium in water, particularly the water in the spent fuel pool and the water in the package during the vacuum-drying process. The reviewer should then verify that provisions are in place for the followup sampling of tritium contamination levels in the vacuum pump oils that will become contaminated as part of the vacuum-drying processes used after loading. Finally, the reviewer should verify that provisions are in place for the measurement of basic tritium surface-contamination levels. (Note that most of these provisions will be very different from those normally encountered in typical reactor operations environments (see Attachment B to this appendix).

Also, because there is the very real possibility that workers could be exposed to tritium levels that are not normally associated with reactor work, the reviewer should verify that the operating procedures clearly state that all personnel involved with TPBAR loading operations will be on a tritium bioassay program, in accordance with Regulatory Guide 8.32, "Criteria for Establishing a Tritium Bioassay Program."

8.4.1.1 Preparation for Loading

The reviewer should verify that the special controls and precautions noted above are included (i.e., having appropriate tritium monitoring and sampling capabilities in place prior to beginning preparation for loading). The reviewer should also verify that additional procedures are in place to deal specifically with the determination of residual tritium outgassing and contamination in any package that has previously been used for TPBAR transport and that appropriate precautions are in place to notify the user that tritium releases are possible when opening an "empty" package and, possibly, during other package operations.

The reviewer should further verify that no elastomeric seals are used in any part of the containment boundary.[3]

8.4.1.2 Loading of Contents

The transport package for irradiated TPBARs will be loaded under water. Also, the package will be vacuum dried and backfilled with an inert gas, in accordance with the generic procedures outlined in the PNNL document, "Evaluation of Cover Gas Impurities and Their Effects on the Dry Storage of LWR Spent Fuel" (Knoll and Gilbert, 1987). However, because the procedures in that document do not address tritium-specific issues, the reviewer should verify that the appropriate tritium health physics considerations outlined below are included.

<u>Contaminated Water Issues</u>

It should be assumed from the outset that the water from the spent fuel pool and the cask-loading pit will be contaminated with tritium, possibly up to several tens of microcuries per milliliter (WEC, 2001). As such, there should be a cautionary note in the procedures stating, in effect, that contact with water from the spent-fuel pool and/or the cask-loading pit should be avoided to the maximum extent possible. Should a worker be splashed with water from either the spent-fuel pool or the cask-loading pit, the contaminated water should be washed off with

[3] For purposes of this document, the term "elastomeric seal" pertains equally to organic, elastomeric, halogenated hydrocarbon, thermoplastic resin, and/or thermosetting resin types of seals. See Section 4.4.1.1; see also Attachment A to this appendix.

clean water immediately. This will help minimize the potential dose to the worker (see Attachment B to this appendix).

It should also be noted that, because the water in the package will have come from the spent-fuel pool/cask-loading pit, the water in the package will also be tritium contaminated. However, it should not necessarily be expected that the contamination levels in the package water will be the same as that in the spent-fuel pool/cask-loading pit. The tritium contamination levels in the package will be dependent on the physical condition of the TPBARs (i.e., intact TPBARs vs. event-failed TPBARs) and the total permeation loss rate from the consolidated batch.[4] Since the volume of the water in the package is much smaller than the volume of water in the spent-fuel pool/cask-loading pit, the tritium contamination levels in the package water could easily be substantially higher than the tritium contamination levels in the spent-fuel pool/cask-loading pit. As a consequence, therefore, the same precautions that applied above with respect to splashing with water from the spent-fuel pool/cask-loading pit apply equally to the case of splashing with drainage water from the package (i.e., should a worker be splashed with package-drainage water, the contaminated water should be washed off with clean water immediately).

To better understand the potential hazards from splashing with water from the spent-fuel pool, the cask-loading pit, and/or the package-drainage water, it is recommended that samples be taken, early and often, throughout the package-draining process. Such samples can be analyzed, through the use of liquid-scintillation counting, to determine the relative hazard potential at any point in time.

Contaminated Vapor Issues

Once the bulk of the water has been removed from the package interior, the process of vacuum drying can begin. Here, too, additional precautions must be taken, because the exhaust gases and vapors from the vacuum-drying equipment will be tritium contaminated. As an immediate consequence, the procedures used must include provisions for the proper venting of the exhaust gases, so that they will not be vented directly into the room or into the breathing zone of the workers. As a followup consequence, it should also be noted that the pump oils used in the vacuum-drying system will also become contaminated with tritium, quite possibly up to several curies per liter. Since direct contact with the pump oil from the vacuum-drying system can represent an additional health physics hazard, contact with the vacuum pump oils and vapors should also be avoided.

Because the equipment used in the vacuum-drying process for irradiated TPBARs has the potential to be tritium contaminated, and because the tritium levels in some parts of the equipment can be expected to be relatively high, the equipment used for the vacuum-drying process for irradiated TPBARs should *not* be used for the vacuum drying of any other packages. Potential options should include decontamination of the equipment internals, changing of the vacuum pump oils to levels that indicate that the pump oils are no longer contaminated with tritium, and/or dedicated storage of such equipment for use only for shipments of irradiated TPBARs.

---

[4] See also the discussion above, on permeation loss rates, in Section 4.4.3.

Pre-Shipment TPBAR Outgassing Measurements

Once the internals of the package have been drained and dried and the package has been backfilled with an inert gas, an additional set of measurements should be made to determine the amount of tritium that might be "at risk" at any point in time during transport.[13, 5] (Note: If the applicant has shown by calculation that the containment criteria to be used are less than *leaktight,* this is also the only way to verify that the containment criteria defined in Section 4 of this appendix will not be exceeded for normal conditions of transport.)

Standard practices associated with tritium content suggest that no closed containers shall be opened without a preliminary determination of the airborne tritium levels that might be "at risk" (i.e., the amount of tritium that might be available to go into, or through, the worker's breathing zone(s) and/or the amount of tritium that might be available to be released directly to the environment). These types of measurements are typically performed with a closed-loop monitoring system that circulates air (or a preselected monitoring gas, such as dry nitrogen, helium, or argon) into and out of the enclosure in question, through a tritium monitor that has the capability of determining real-time tritium concentrations. Once the tritium concentration inside the containment vessel has been determined, the total amount of tritium "at risk" at any given time can be determined.

Once the amount of tritium "at risk" has been determined at the shipping facility prior to shipment, the receiving facility can be notified as to what they might expect upon receipt. Once the amount of tritium "at risk"" has been determined at the receiving facility, the receiving facility will be able to compare its measurements to those performed previously at the shipping facility. Armed with this kind of information, the receiving facility should have several options in place to deal with the situation, one of which should include the option of running the containment gases through a local cleanup system prior to opening the containment vessel. A second option that should also be considered is the sampling of the containment gases for the actual gas composition, and the subsequent determination of potential combustible-gas mixtures that might be encountered as part of the unloading process.

8.4.1.3 Preparation for Transport

For the most part, the procedures used for this portion of the operating procedures should be similar to those used for the shipment of any other radioactive material, including spent fuel. There are, however, a number of areas where the procedures used could be or should be quite different. Each is described below.

Pre-Shipment Radiation Surveys

For the shipment of irradiated TPBARs, the pre-shipment dose-rate measurement requirements should be virtually identical to the requirements for the shipment of other radioactive material. As was noted in Section 5.4.2.3, however, there should be no production of neutrons from irradiated TPBARs. The pre-shipment requirement for neutron-dose-rate measurements can, therefore, be eliminated for the shipment of irradiated TPBARs.

Pre-Shipment Surface Contamination Measurements

[5] See the additional discussion in Sections A.4, A.5, and A.6 in Attachment A to this appendix.

For the shipment of irradiated TPBARs, the pre-shipment surface contamination measurement requirements will have to be broken down into two distinct types: (i) routine surface contamination measurements for gross beta-gamma contamination, and (ii) routine surface contamination measurements for tritium "outgassing" (see Attachment A, Section A.6.3, to this appendix). Although the former type of measurement is routinely required for the shipment of most radioactive materials, including spent fuel, the phenomenon known as "outgassing" in the tritium business is equivalent to "cask-weeping" in the spent fuel business.

Pre-Shipment Leakage Tests

For the shipment of most radioactive materials, ANSI N14.5 specifies a pre-shipment leakage test criterion of a leakage rate that is either less than the reference air leakage rate or no detected leakage when tested to a sensitivity of 10^{-3} ref-cm^3/sec. It is not uncommon, however, when shipping tritium content to adopt a pre-shipment leakage test criterion of *leaktight,* as defined in ANSI N14.5 (see Section 4.4.3). Should an applicant choose to adopt the ANSI N14.5 *leaktight* criterion for the pre-shipment leakage test, it should be verified that the method(s) the applicant selected can be used to meet the leaktight 10^{-7} reference·cubic centimeters criterion.

Special Instructions

Under the broader heading of special instructions that should be provided to the consignee for opening the package, the following should be provided as part of the pre-shipment information:

(1) the pre-shipment results from the surface-contamination measurements for gross beta-gamma contamination

(2) the pre-shipment results from the surface-contamination measurements for tritium

(3) the tritium outgassing levels from the procedures described above in Section 8.4.1.2 of this appendix

8.4.2 Package Unloading

As was noted previously in Section 8.4.1 of this appendix, the reviewer should verify that monitoring and sampling provisions are in place for tritium in any of the forms that might be encountered (e.g., tritium in air, tritium in water, tritium in vacuum pump oils). Because the receiving facility will be the Tritium Extraction Facility, located at the U.S. Department of Energy's (DOE's) Savannah River Site, it is expected that the tritium-monitoring requirements described above will be in place, as specified. Also, because the Tritium Extraction Facility can be expected to operate along the same lines as any other DOE tritium facility, it is also expected that the personnel involved with the unloading operations will already be on a tritium bioassay program.

8.4.2.1 Receipt of Package from Carrier

The reviewer should verify that the standard radiation survey measurements are taken upon arrival of the package at the receiving facility. As noted previously, the TPBAR contents do not produce neutrons, so there should be no need for neutron measurements as part of the incoming survey.

For the surface-contamination measurements, however, the reviewer should verify that the procedures specify performance of *two* distinctly different types of surface-contamination measurements on the external surface of the package, the first being for gross, beta-gamma surface contamination, and the second being for surface contamination-measurements for tritium.

8.4.2.3 Removal of Contents

The reviewer should verify that, prior to the removal of the contents, there is a step in the procedures to determine the amount of tritium that might be "at risk," *before* the containment vessel is opened. The method should follow the techniques described above in Section 8.4.1.2, and, in this case, the user should be *required* to perform such a measurement, prior to the unloading of TPBARs. Given the variety of possibilities described above in Table E.4-1, and in Section 4.4.3, this is the only way that the actual amount of tritium "at risk" can be determined in a real-time, on-the-spot situation.

Once the amount of tritium "at risk" has been determined at the receiving facility, the receiving facility will be able to compare its measurements against those performed previously at the shipping facility. Armed with this kind of information, the receiving facility should have several options in place to deal with the situation, one of which, as was noted above, includes the option of running the containment gases through a local cleanup system, prior to opening the containment vessel. A second option that should also be available is the sampling of the containment gases for the actual gas composition, and the subsequent determination of potential combustible-gas mixtures that might be encountered as part of the unloading process.

8.4.3 Preparation of Empty Package for Transport/Storage

Whether the package is to be returned to the reactor, or whether the package is to be placed in storage, once it has been used for the transport of TPBARs, the internal surfaces of the containment vessel will have been contaminated with tritium. As a consequence, the package can no longer be considered as being *empty,* with respect to its tritium content. Therefore, before the *empty* package is moved to its next destination, the residual containment vessel gases will have to be sampled again, using the same basic measurement techniques described above in Section 8.4.1.2 of this appendix. The purpose of the measurement, in this case, however, is to establish a baseline value for the tritium outgassing rate from the internal surfaces of the containment vessel, from a supposedly *empty* package.

Similar measurements will have to be repeated again, prior to opening the package, at the next destination. The purpose of the measurements, in this case, however, is to determine the amount of tritium that might be "at risk" at the new receiving destination. If the amount of tritium that might be "at risk" is on the order of a few, to several tens, to several hundreds of curies, a receiving reactor site may have no objections to discharging that amount of tritium directly into its spent-fuel pool. If, on the other hand, the receiving site is a maintenance facility, where the package would be opened to room air, amounts of tritium on the order of a few, to several tens, to several hundreds of curies "at risk" discharged directly into the room air, and/or the breathing environment, would probably not be acceptable.

From a regulatory standpoint, it should also be noted that once a package has been used for the shipment of irradiated TPBARs, it can probably, never again, be shipped as an *empty* package. While the measurement techniques described above are sensitive enough to demonstrate that the amount of tritium "at risk" is well below an A_2 value for tritium

(i.e., 1,080 Ci), the internal surface contamination limits requirements specified in 49 CFR 173.428(d) now become the limiting factors.[6] (See also the additional discussion in Attachment B, Sections B.5.1.1.1 and B.5.1.1.3, to this appendix.)

Finally, it should be noted that, because it should be expected that residual amounts of tritium will always be present on/in the internal surfaces of the containment vessel, additional maintenance requirements will have to be added to look for signs of intergranular corrosion and intergranular-stress-corrosion cracking over time, particularly if the containment vessel is constructed of materials other than Type 304L or Type 316L stainless steels (see the additional discussion in Sections 7.4 and 4.4.1, above, and Section 9.4.2, below).

8.6 References

Institute for Nuclear Materials Management, "American National Standard for Radioactive Materials—Leakage Tests on Packages for Shipment," ANSI N14.5-2014, New York, NY, 2014.

Knoll, R.W., and E.R. Gilbert, "Evaluation of Cover Gas Impurities and Their Effects on the Dry Storage of LWR Spent Fuel," PNL-6365, Pacific Northwest National Laboratory, Richland, Washington, November 1987.

U.S. Nuclear Regulatory Commission, Regulatory Guide 8.32, "Criteria for Establishing a Tritium Bioassay Program," U.S. Government Printing Office, July 1988.

Westinghouse Electric Company, LLC, "Implementation and Utilization of Tritium-Producing Burnable Absorber Rods (TPBARs) in Watts Bar Unit I," NDP-00-0344, Revision 1, July 2001. (See, in particular, Section 1.5.1, pp. 1-14 through 1-19, and Section 3.7.3, pp. 3-22 through 3-27.).

9 Acceptance Tests and Maintenance Program Evaluation

9.4 Review Procedures

This section considers each of the subsections of Section 9.4 (Review Procedures) of Chapter 9 of this SRP and highlights the special considerations or attention needed for TPBAR transportation packages. In subsections where no significant differences were found, that particular subsection has been omitted from this section.

See Chapter 9, Figure 9-1, of this SRP for the interrelationship between the review of the acceptance tests and maintenance program and the other chapter reviews.

9.4.1 Acceptance Tests

Because it has already been assumed that the packaging to be used for the shipment of irradiated TPBARs will be an existing, modified, or newly designed spent fuel transportation package, there should be no significant differences in the acceptance-test requirements for irradiated TPBAR packages, relative to the requirements for new spent-fuel packages, or new radioactive materials packages.

---

[6] See also the additional discussion in Sections 4.4.3, A.6.1, A.6.2, A.6.3, and A.6.4 in Attachment A to this appendix.

9.4.2 Maintenance Program

After the package has been used for the shipment of irradiated TPBARs, it should be assumed that the internals of the package are contaminated with tritium. Prior to opening an *empty* package, the appropriate precautions should be taken to verify that the internal walls of the containment vessel are not outgassing (see the related discussion in Sections 8.4.1.2 and 8.4.3 of this appendix, and Sections A.4, A.5, and A.6 of Attachment A to this appendix). This type of information can be particularly important to note for leakage testing purposes—to determine the amount of tritium (as HTO) that might have to be pumped through a vacuum system—and as information to be used for pre-inspection purposes, so that the workers can be appropriately notified of potential HTO outgassing problems.

9.4.2.3 Component and Materials Tests

As was noted in Section 8.4.3, above, it should be expected that the internals of the package will become contaminated with tritium any time the package is used for the shipment of irradiated TPBARs. As part of the maintenance program, therefore, special attention should be paid to potential long-term corrosion issues. At a minimum, therefore, it is recommended that an additional requirement be added to the maintenance program to require an annual inspection by a qualified corrosion metallurgist of all accessible containment surfaces, welds, heat-affected zones, and sealing surfaces for evidence of corrosive attack or residue.

It is further recommended that a record be kept of the total amount of tritium that has been released into the containment vessel for each package used. The total amount of tritium for any given shipment can be determined from the outgassing measurements mandated above in Section 8.4.1.2. Such records should be kept for the lifetime of the package.

ATTACHMENT A PHYSICAL AND CHEMICAL PROPERTIES OF TRITIUM

(Note: The bulk of the information presented in this attachment was adapted from Sections 2.10.1 through 2.10.6 of the U.S. Department of Energy's "Design Considerations" (DOE, 1999). Although some of the information may appear to be somewhat dated, the basic concepts behind the information have not changed since that time.[1] See also the information presented in Attachment B.)

A.1 Sources of Tritium

Tritium is the lightest of the naturally occurring radioactive nuclides. Tritium is produced in the upper atmosphere as a result of cascade reactions between incoming cosmic rays and elemental nitrogen. In its simplest form, this type of reaction can be written as follows:

$$^{14}_{7}\mathrm{N} + ^{1}_{0}n \rightarrow ^{12}_{6}\mathrm{C} + ^{3}_{1}\mathrm{H}. \qquad \text{(A.1)}$$

Tritium is also produced in the sun as a subset of the proton-proton chain of fusion reactions. Although a steady stream of the tritium near the surface of the sun is ejected out into space (along with many other types of particles) on the solar wind, much larger streams are ejected out into space during solar flares and prominences. Being much more energetic than its solar wind counterpart, tritium produced in this manner is injected directly into the earth's upper atmosphere as the earth moves along in its orbit. Regardless of the method of introduction, however, estimates suggest that the natural production rate for tritium is about 4×10^6 Ci/yr, which, in turn, results in a steady-state, natural-production inventory of about 7×10^7 Ci.

Tritium is also introduced into the environment through a number of manmade sources. The largest of these, atmospheric nuclear testing, added approximately 8×10^9 Ci to the environment between 1945 and 1975. Because the half-life of tritium is relatively short (i.e., about 12.3 years—see Section A.3.1, below), much of the tritium produced in this manner has long since decayed. However, tritium introduced into the environment as a result of atmospheric testing increased the natural background levels by more than two orders of magnitude, and, in spite of its relatively short half-life, the natural background levels of tritium in the environment will not return to normal until sometime between the years 2020 and 2030.

Tritium levels in the environment cannot truly return to background levels, however, because of a number of additional manmade sources. Tritium is also produced as a ternary fission product, within the fuel rods of nuclear reactors, at a rate of $1–2\times10^4$ Ci/1,000 megawatts electric. (Although much of the tritium produced in this manner remains trapped within the matrix of the fuel rods, estimates suggest that recovery of this tritium could reach levels of 1×10^6 Ci/yr.) Typical light-water and heavy-water moderated reactors produce another 500–1,000 to 1×10^6 Ci/yr, respectively, for each 1,000 megawatts of electrical power. Commercial producers of radioluminescent and neutron-generator devices also release about 1×10^6 Ci/yr. Thus, tritium facilities operate within a background of tritium from a variety of sources.

---

[1] Additional Note: Because the bulk of the information presented in this attachment is presented in a paraphrased format, it is suggested that the reader refer directly to DOE 1999 for additional information, which does include all the appropriate references to the original citations.

A.2 The Relative Abundance of Tritium

The isotopes of hydrogen have long been recognized as being special—so special, in fact, that each has been given its own chemical name and symbol. Protium, for example, is the name given to the hydrogen isotope of mass-1, and the chemical symbol for protium is H. Deuterium is the name given to the hydrogen isotope of mass-2; the chemical symbol for deuterium is D. Tritium is the name given to the hydrogen isotope of mass-3. Its chemical symbol is T.

Protium is by far the most abundant of the hydrogen isotopes. Deuterium follows next with a relative abundance of about 1 atom of deuterium for every 6,600 atoms of protium; that is, the D-to H-ratio is about 1:6,600. Tritium is the least common hydrogen isotope. The relative abundance of naturally occurring tritium (i.e., tritium produced in the upper atmosphere and tritium injected directly by the sun) has been estimated to be on the order of 1 tritium atom for every 10^{18} protium atoms. The introduction of manmade tritium into the environment, particularly as a result of atmospheric testing, has raised this level approximately one order of magnitude so that the ambient T-to-H ratio is now approximately $1{:}10^{17}$.

The names, commonly used chemical and nuclear symbols, atomic masses, and relative natural abundances of the hydrogen isotopes are summarized in Table A-1.

Table A-1 The Isotopes of Hydrogen

Name	Chemical symbol	Nuclear symbol	Atomic mass	Natural abundance (%)	Natural abundance (x:H ratio)
Protium	H	${}^{1}_{1}\mathrm{H}$	1.007 825 03	99.985%	1:1
Deuterium	D	${}^{2}_{1}\mathrm{H}$	2.014 101 78	0.015%	1:6,600
Tritium	T	${}^{3}_{1}\mathrm{H}$	3.016 049 26 [a]	Very Low	$1{:}10^{17}$

[a] Calculated.

A.3 Radioactive Decay of Tritium

A.3.1 Generic

As the lightest of the pure beta emitters, tritium decays with the emission of a low-energy beta particle and an anti-neutrino, as follows:

$$ {}^{3}_{1}\mathrm{H} \rightarrow \mathrm{He} + \beta + \bar{\nu} \qquad \text{(A.2)} $$

Tritium decays with a half-life of 12.32 years. The specific activity of tritium is approximately 9,619 Ci/gram, and/or 1.040×10^{4} grams per Ci. In addition, the activity density (i.e., the specific activity per-unit volume) for tritium gas (T_2) is 2.589 curies per cubic centimeter (Ci/cm^3) under standard temperature and pressure (STP) conditions (i.e., 1 atmosphere of pressure at 0 degrees Celsius (°C)), and/or 2.372 Ci/cm^3 at 25 °C. It can also be shown that the former value translates to 58,023 curies per gram-mole and 29,012 curies per gram-atom, under STP conditions.

A.3.2 Beta Emissions

Beta particles interact with matter by colliding with bound electrons in the surrounding medium. In each collision, the beta particle loses energy as electrons are stripped from molecular fragments (ionization) or promoted to an excited state (excitation). The beta particle also loses energy by emitting photons (bremsstrahlung radiation), as it is deflected by the coulomb fields of nuclei. Because the rate of energy loss per unit path length (linear energy transfer) increases as the velocity of the beta particle slows, a distinct maximum range can be associated with beta particles of known initial energy.

The beta decay energy spectrum for tritium is shown below in Figure A-1. The maximum energy of the tritium beta is 18.591±0.059 keV. The average energy is 5.685 ±0.008 keV. The maximum range [2] of the tritium beta is 0.58 milligrams per square centimeter (mg/cm^2).

The absorption of energy from beta particles that emanate from a point source of tritium has been shown to occur nearly exponentially with distance. This is a result of the shape of the beta spectrum as it is subdivided into ranges that correspond with subgroups of initial kinetic energies. As a consequence, the fraction of energy absorbed, *F,* can be expressed as shown in Equation A.3:

$$F = 1 - e^{-(\mu/\rho)(\rho)(x)} \qquad \text{(A.3)}$$

where μ/ρ is the mass attenuation coefficient of the surrounding material, ρ is the density of the surrounding material, and x is the thickness of the surrounding material. For incremental energy absorption calculations, Equation A.3 can be restated as follows:

$$F = 1 - e^{-\mu x} \qquad \text{(A.3a)}$$

where μ (i.e., the linear attenuation coefficient) is the product of the mass attenuation coefficient (μ/ρ) and the density (ρ), and x is the incremental thickness of choice. In gases at 25 °C, at atmospheric pressure, for example, the linear attenuation coefficients for the gases hydrogen (H_2), nitrogen (N_2), and argon (Ar), are 1.81 per centimeter (cm^{-1}), 11.0 cm^{-1}, and 12.9 cm^{-1}, respectively. A 5-millimeter thickness of air will absorb 99.6 percent of tritium betas. A comparable thickness of hydrogen (or tritium) gas will absorb only 60 percent of the tritium betas.

Absorption coefficients for other media can be estimated by applying correction factors to the relative stopping power (the scattering probability) of the material of interest. For the most part, these will be directly proportional to ratios of electron densities. Examples of tritium beta ranges are shown below in Table A-2. The values shown for tritium gas and for air are stated as STP values.

---

[2] To be technically correct, the term “range” should have the units of distance. In many cases, however, it is more convenient to express the “maximum range” of a particle in terms of the mass per unit area of the absorber needed to stop the particle (with units of mg/cm^2), which is equal to the product of the absorber’s density (in units of mg/cm^3) An advantage of expressing ranges in this way is that, as a practical matter, the masses and areas of thin foils, which are often used in range experiments, are easier to measure than their thicknesses.

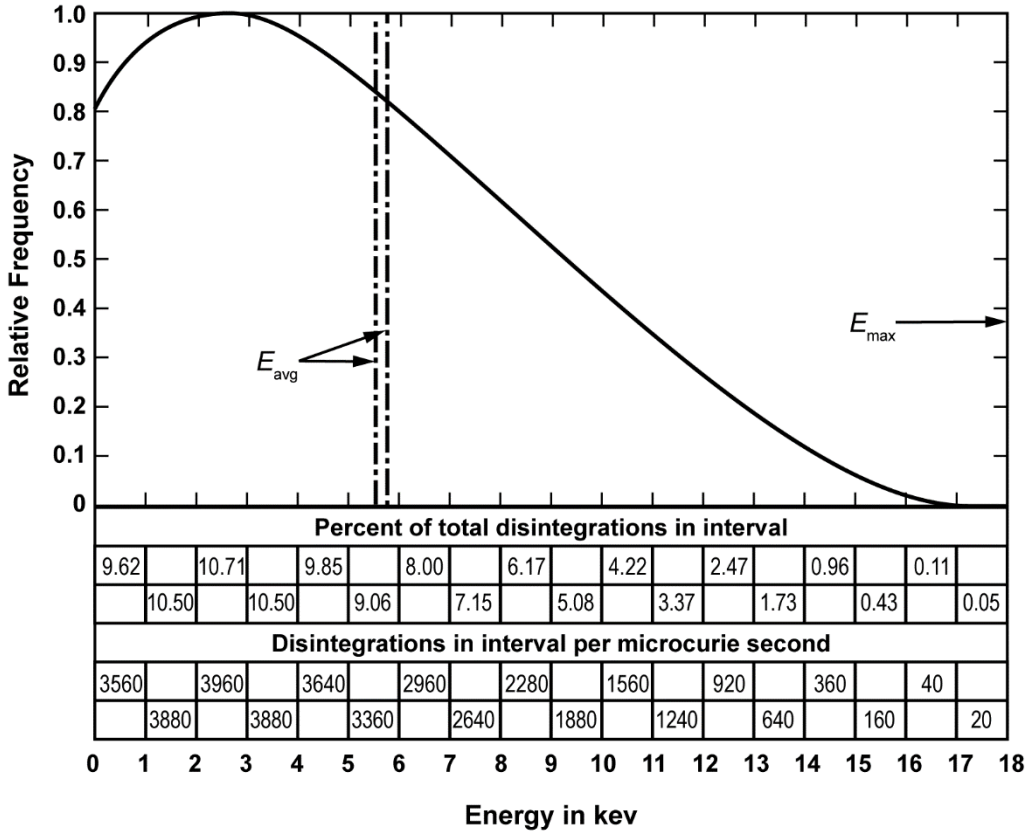

Figure A-1 Tritium Beta-Decay Energy Spectrum

Table A-2 Approximate Ranges of Tritium Betas

Material	Beta	Range
Tritium gas	Average	0.26 cm
Tritium gas	Maximum	3.2 cm
Air	Average	0.04 cm
Water (liquid)	Average	0.42 µm
Water (liquid)	Maximum	5.2 µm
Stainless Steel	Average	0.06 µm

A.3.3 Photon Emissions

No nuclear electromagnetic emissions (gamma emissions) are involved in the decay scheme for tritium, although it is worth noting that tritium does produce bremsstrahlung (braking radiation) as its beta particles are decelerated through interactions with nearby matter. For purposes of this document, however, the production of tritium bremsstrahlung radiation can be ignored.

A.4 <u>The Chemical Properties of Tritium</u>

A.4.1 Generic

Although the chemical properties of tritium have been described in great detail, three distinct types of chemical reactions, and one underlying principle in particular, are worth noting here. The reaction types are solubility reactions, exchange reactions, and radiolysis reactions. The

underlying principle is Le Châtelier's Principle. An overview of these types of reactions and of Le Châtelier's Principle is presented below.

A.4.2 Solubility Reactions

Elemental hydrogen, regardless of its molecular form (i.e., H_2, hydrogen deuteride (HD), deuterium gas (D_2), HT, deuterium tritium (DT), and/or T_2), can be expected to be soluble, to some extent, in virtually all materials. On the atomic or molecular scale, hydrogen-like atoms, diatomic hydrogen-like species, or larger, hydrogen-like-bearing molecules tend to dissolve interstitially (i.e., they diffuse into the crystalline structure, locating themselves inside the normal lattice work of the internal structure). Schematically, such reactions can easily be described in terms of the generic reactions shown in Equations A.4a, A.4b, and A.4c:

$$\mathrm{H_2} + \text{ Material} \rightarrow 2\mathrm{H} + \text{Material} \tag{A.4a}$$

$$^{x}\mathrm{H_y} + \text{Material} \rightarrow {}^{x}\mathrm{H_y} + \text{Material} \tag{A.4b}$$

$$^{3}_{1}\mathrm{H} + \text{ Material} \rightarrow {}^{3}_{1}\mathrm{H} + \text{Material} \tag{A.4c}$$

Theoretically, however, the underlying mechanics are much more complex. For example, of the generic reactions shown above, none are shown as being reversible. From a chemical perspective, none of these reactions is technically correct because, in most dissolution reactions, the solute that goes in can be expected to be the same solute that comes out. From an operational standpoint, however, experience has shown that, regardless of the tritiated compound that enters into the reaction, an HTC (i.e., a tritiated water vapor) component can be expected to come out. Presumably, this is due to catalytic effects and/or exchange effects that derive from the outward migration of the tritiated species through the molecular layers of water vapor that are bound to the downstream surface of the material.

A.4.3 Exchange Reactions

Driven primarily by isotope effects, exchange reactions involving tritium can be expected to occur at a relatively rapid pace. Moreover, the speed at which reactions of this type can occur can be further enhanced by the addition of energy from radioactive decay. For tritium, therefore, reactions similar to those shown in Equations A.5 and A.6 can be expected, and they can be expected to reach equilibrium in time frames that range from seconds to hours:

$$\mathrm{CH_4} + 2\mathrm{T_2} \leftrightarrow \mathrm{CT_4} + 2\mathrm{H_2} \tag{A.5}$$

$$2\mathrm{H_2O} + \mathrm{T_2} \leftrightarrow 2\mathrm{HTO} + \mathrm{H_2} \tag{A.6}$$

Equation A.5 describes the preferential form of tritium, as it exists in nature, in the earth's upper atmosphere. Equation A.6 describes the preferential form of tritium, as it exists in nature, in the earth's lower atmosphere (i.e., in a terrestrial environment).

Equation A.6 is particularly important because it describes the formation of tritiated water vapor (i.e., HTO) without the involvement of free oxygen (i.e., with no free oxygen gas (O_2)). A comparable reaction that would involve free oxygen would take the form of a classic inorganic chemical reaction, such as shown in Equation A.7:

$$\mathrm{H_2} + \mathrm{T_2} + \mathrm{O_2} \rightarrow 2\mathrm{HTO} \tag{A.7}$$

But, because a classic inorganic chemical reaction like that depicted in Equation A.7 can be expected to reach equilibrium in a time frame that ranges from many hours to several days under the conditions normally found in nature, classic inorganic chemical reactions of this type are not necessary for this discussion.

A.4.4 Radiolysis Reactions

It was noted previously in Section A.3.2 that the range of the tritium beta is very short. As a consequence, it follows that virtually all the energy involved in tritium beta decay will be deposited in the immediate vicinity of the atoms undergoing decay. When the medium surrounding the decaying atoms is tritium gas, tritiated water, or tritiated water vapor in equilibrium with its isotopic counterparts, reactions such as those presented in Equations A.8 and A.9 below can be expected to dominate. When the medium surrounding the decaying atoms is not a medium that would normally be expected to contain tritium, however, an entire spectrum of radiolysis reactions can be expected to occur.

For typical, day-to-day operations, the most common type of radiolysis reactions in the tritium community can be expected to occur at the interface between the air above a tritium-contaminated surface and the tritium-contaminated surface itself. For these types of reactions, some of the energy involved in the tritium-decay process can be expected to convert the nitrogen and oxygen components in the air immediately above the surface (i.e., the individual N_2 and O_2 components in the air) into the basic generic oxides of nitrogen, such as nitric oxide, nitrous oxide, and nitrogen peroxide (i.e., NO, N_2O, and NO_2, respectively). As the energy deposition process continues, it can also be expected that these simpler oxides will be converted into more complex oxides, such as nitrites and nitrates (i.e., NO_2s and NO_3s, respectively). Because all nitrite and nitrate compounds are readily soluble in water (and/or water vapor), it can further be expected that a relatively large percentage of the available nitrites and nitrates in the overpressure gases will be adsorbed into the monomolecular layers of water vapor that are actually part of the surface (see Section A.6, below). With the available nitrites and nitrates now an integral part of the monomolecular layers of water vapor, it can finally be expected that the most common type of radiolysis-driven reactions should result in the gradual, low-level buildup of tritiated nitrous and nitric acids on the surfaces of most tritium-contaminated materials.

For the most part, this particular type of reaction sequence does not normally present itself as a problem in day-to-day tritium operations, because (i) the overall production efficiency for these types of reactions is relatively low, and (ii) the materials used for the construction of most tritium-handling systems are not susceptible to attack by nitrous and/or nitric acids. By contrast, however, it should be noted that other types of radiolysis-driven reactions can be expected to occur with tritium in the presence of compounds containing chlorides and/or fluorides, and that these can easily lead to chloride/fluoride-induced stress-corrosion cracking (see, for example, the discussion on materials compatibility issues in Section A.7, below).

One additional point that is worth noting about radiolysis-driven reactions is that their long-term potential for causing damage should not be underestimated. Although the overall production efficiency for these types of reactions might be expected to be relatively low, the generation of products from these types of reactions can, on the other hand, be expected to occur continuously over relatively long periods of time (e.g., 10–20 years, or more). As a consequence, the long-term effects from these types of reactions can be difficult to predict, especially because very little is known about the long-term, synergistic effects of low-level, tritium microchemistry (see Sections A.7 and A.8, below).

A.5 Le Châtelier's Principle

A chemical restatement of Newton's Third Law of Motion, Le Châtelier's Principle states that when a system at equilibrium is subjected to a perturbation, the response will be such that the system eliminates the perturbation by establishing a new equilibrium. When applied to situations like those depicted in Equations A.5 and A.6 above, Le Châtelier's Principle states that, when the background tritium levels are increased in nature (by atmospheric testing, for example), the reactions will be shifted to the right in order to adjust to the new equilibrium conditions by readjusting to the naturally occurring isotopic ratios. Thus, we get reactions of the type shown in Equations A.5a and A.6a:

$$\mathrm{CH_4 + 2T_2 \leftrightarrow CT_4 + 2H_2}, \tag{A.5a}$$

$$\mathrm{2H_2O + T_2 \leftrightarrow 2HTO + H_2}. \tag{A.6a}$$

The inverse situation also applies in that, when the background tritium levels are decreased in nature, the reactions will be shifted back to the left, by again readjusting to the naturally occurring isotopic ratios, as shown in Equations A.5b and A.6b:

$$\mathrm{CH_4 + 2T_2 \leftrightarrow CT_4 + 2H_2}, \tag{A.5b}$$

$$\mathrm{2H_2O + T_2 \leftrightarrow 2HTO + H_2} \tag{A.6b}$$

By itself, Le Châtelier's Principle is a very powerful tool. When applied singularly, or to a sequential set of reactions like those depicted in Equations A.5, A.5a, and A.5b or A.6, A.6a, and A.6b, Le Châtelier's Principle shows that exchange reactions of the types depicted above tend to behave as springs, constantly flexing back and forth, constantly readjusting to changing energy requirements, in a constantly changing attempt to react to a new set of equilibrium conditions.

Since elemental hydrogen, regardless of its molecular form (i.e., H_2, HD, D_2, HT, DT, and/or T_2), can be expected to dissolve to some extent in virtually all materials, Le Châtelier's Principle can be expected to work equally as well on solubility reactions, like those shown above in the generic Equations A.4a, A.4b, and A.4c. These will be covered in more detail in Section A.6.4, below.

A.6 Modeling the Behavior of Tritium

Any model of the behavior of tritium starts with the assumption that all three hydrogen isotopes coexist in nature, in equilibrium with each other, in the nominal isotopic ratios described above in Table A-1. To this is added the consequences Le Châtelier's Principle predicted. From both, we get the fundamental relationship shown in Equation A.8:

$$\mathrm{2H_2 + 2D_2 + 2T_2 \leftrightarrow H_2 + HD + D_2 + HT + DT + T_2} \tag{A.8}$$

In a terrestrial environment, virtually all the tritium that exists in nature exists as water or water vapor. Correcting this situation for the natural conversion to water and/or water vapor, Equation A.8 becomes Equation A.9:

$$\mathrm{2H_2O + 2D_2O + 2T_2O \leftrightarrow H_2O + HDO + D_2O + HTO + DTO + T_2O} \tag{A.9}$$

It can also be assumed that the surfaces of all terrestrially bound objects are coated with a series of monomolecular layers of water vapor. In the final step, it can be assumed that the innermost layers of water vapor are very tightly bound to the actual surface, that the intermediate layers of water vapor are relatively tightly to relatively loosely bound, and that the outermost layers of water vapor are very loosely bound. (See Figure A-2.)

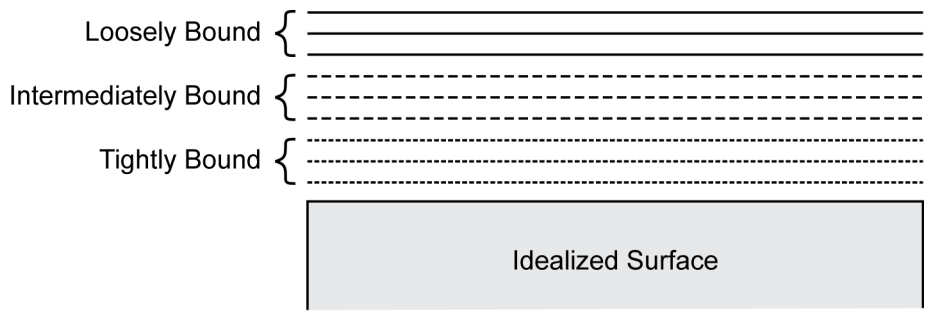

Figure A-2 Idealized Surface Showing Idealized Monomolecular Layers of Water Vapor

A.6.1 Surface-Contamination Modeling

When an overpressure of tritium is added to the system (i.e., the surface, in this case), a perturbation is added to the system, and Le Châtelier' s Principle tells us that the tritium levels in the monomolecular layers of water will be shifted to the right, as shown in Equation A.9a:

$$2H_2O + 2D_2O + 2T_2O \leftrightarrow H_2O + HDO + D_2O + HTO + DTO + T_2O \quad \text{(A.9a)}$$

Tritium is incorporated first into the loosely bound, outer layers, then into the intermediate layers, and finally into the very-tightly-bound, near-surface layers. When the overpressure is removed, the system experiences a new perturbation. In this case, however, the perturbation is in the negative direction, and the system becomes the entity that contains the excess tritium. Le Châtelier's Principle, in this case, indicates that the tritium levels in the monomolecular layers of water will be shifted back to the left, as shown in Equation A.9b:

$$2H_2O + 2D_2O + 2T_2O \leftrightarrow H_2O + HDO + D_2O + HTO + DTO + T_2O \quad \text{(A.9b)}$$

The tritium that had previously been incorporated into the monomolecular layers now begins to move out of the layers, in an attempt to return to background levels.

The movement of tritium into the monomolecular layers of water vapor is generically referred to as "plate-out." The movement of tritium out of the monomolecular layers of water vapor is generically referred to as "outgassing."

A.6.2 Plate-Out Expectations

When the concentration gradients have been small and/or the exposure times have been short, only the outermost, loosely bound, monomolecular layers of water vapor will be affected. Under such circumstances, the surface-contamination levels will range from no detectable activity to very low levels, that is, up to a few tens of disintegrations per minute per 100 square centimeters (dpm/100 cm^2). Since only the outermost monomolecular layers are affected, and

since these layers are easily removed by a simple wiping, the mechanical efforts expended to perform decontamination on such surfaces will, if any, be minimal.

When the concentration gradients have been relatively large and/or the exposure times have been relatively long, the affected monomolecular layers will range down into the intermediately bound layers (i.e., the relatively tightly-to-relatively-loosely-bound layers). Under these circumstances, the surface contamination levels will range from relatively low to relatively high (i.e., from a few hundred to a few thousand dpm/100 cm^2). Because the tritium has now penetrated beyond those levels that would normally be easily removed, the mechanical efforts expended to decontaminate such surfaces will be more difficult than those described above.

When the concentration gradients have been large and/or the exposure times have been long, the affected monomolecular layers will range all the way down into the very-tightly-bound layers. The tritium will have penetrated down into the actual surface of the material, itself (see Section A.6.4, below). Under such circumstances, the surface contamination will range from relatively high-to-very-high levels (i.e., from a few tens of thousands to several hundred thousand dpm/100 cm^2), and the mechanical efforts expended to decontaminate such surfaces could be very difficult.

A.6.3 Outgassing Expectations

The phenomenon of outgassing is rarely a problem under the first of the exposure situations described above, i.e., situations in which the concentration gradients have been small and/or the exposure times have been short.

However, when systems that have been exposed to even small amounts of tritium for long-to-very-long periods of time are suddenly introduced to room air, or any sudden change in its equilibrium situation, Equations A.5, A.5a, and A.5b; Equations A.6, A.6a, and A.6b; and Reactions A.9, A.9a, and A.9b can be thought of as *springs,* and the initial phenomenon of outgassing can be described as damped harmonic motion. Under such circumstances, therefore, a relatively large, initial “puff” of HTO will be released from the monomolecular layers of water vapor, followed by a relatively long, much smaller trailing release. Because several curies of HTO can be released in a few seconds, and several tens of curies can be released in a few minutes, the speed of the “puff” portion of the release should not be underestimated. The duration of the trailing portion of the release should not be underestimated either. Depending on the concentration gradients involved and/or the time frames involved in the plate-out portion of the exposure, the trailing portion of the release can easily last from several days to several months, or even years.

As the trailing portion of the release asymptotically approaches zero, the outgassing part of the release becomes too small to measure on a real-time basis, and the tritium levels involved in any given release can only be measured by surface contamination measurement techniques. Under such circumstances, the situation reverts back to the circumstances described above in Section A.6.2. With no additional influx of tritium, tritium incorporated into all of the monomolecular layers of water vapor will eventually return to background levels, without human intervention, regardless of the method or level of contamination.

A.6.4 Bulk Contamination Modeling

When an overpressure of tritium is added to the system (i.e., the surface of an idealized material), Le Châtelier's Principle indicates that the tritium levels in the monomolecular layers of water will be shifted to the right, as follows:

$$2H_2O + 2D_2O + 2T_2O \leftrightarrow H_2O + HDO + D_2O + HTO + DTO + T_2O \quad \text{(A.9a)}$$

Tritium is incorporated first into the loosely bound, outer layers, then into the intermediate layers, and finally into the very-tightly-bound, near-surface layers. As the tritium loading in the near-surface layers builds, the disassociation processes that proceed normally as a result of the tritium decay make an overpressure of tritium available in the atomic form (i.e., as T). Relative to the normal amounts of elemental hydrogen that can be expected to be dissolved in the material, the availability of excess tritium in the atomic form represents a different type of perturbation on a system, and the available tritium begins to dissolve into the actual surface of the bulk material. As the local saturation sites in the actual surface of the bulk material begin to fill, the tritium dissolved in the surface begins to diffuse into the body of the bulk material. At that point, the behavior of the tritium in the body of the bulk material becomes totally dependent on the material in question.

A.7 <u>Materials Compatibility Issues</u>

Elemental hydrogen, regardless of its form (H_2, D_2, T_2, and all combinations thereof), can be expected to dissolve to some extent in virtually all materials. For simple solubility reactions, such as Equations A.4a, A.4b, and A.4c, as follows:

$$H_2 + \text{Material} \rightarrow 2H + \text{Material} \quad \text{(A.4a)}$$

$$^{x}H_y + \text{Material} \rightarrow {}^{x}H_y + \text{Material} \quad \text{(A.4b)}$$

$$^{3}_{1}H + \text{Material} \rightarrow {}^{3}_{1}H + \text{Material}, \quad \text{(A.4c)}$$

Basic compatibility issues should be considered. As a general rule, the solubility of tritium in pure metals and/or ceramics should have a minimal effect, at normal room temperatures and pressures, except for the possibility of hydrogen embrittlement. For alloyed metals, such as stainless steel, similar considerations apply, again, at normal room temperatures and pressures. For alloyed metals, however, additional consideration must be given to the possible leaching of impurities from the alloyed metal, even at normal room temperatures and pressures. (In LP-50 containment vessels, for example, the formation of relatively large amounts of tritiated methane (i.e., up to 0.75 mole percent of CT_4) has been noted after containers of high-purity tritium have been left undisturbed for several years. The formation of the tritiated methane, in this case, has long been attributed to the leaching of carbon from the body of the stainless-steel containment vessel.)

A.7.1 Pressure Considerations

Under increased pressures (e.g., from a few tens to several hundred atmospheres), however, the general rules no longer apply because, in addition to the possibility of hydrogen embrittlement and possible leaching effects, helium embrittlement is also possible. Helium embrittlement tends to occur as a result of the dissolved tritium decaying within the body of the

material, the resultant migration of the helium-3 atoms to the grain boundaries of the material, the localized agglomerations of the helium-3 atoms at the grain boundaries, and the resultant high-pressure buildups at these localized agglomerations.

A.7.2 Temperature Considerations

Under increased temperature situations, the matrix of solubility considerations becomes even more complicated because virtually all solubility reactions are exponentially dependent on temperature. In the case of diffusional flow through the walls of a containment vessel, for example, it can be assumed that steady-state permeation will have been reached when:

$$\left(\frac{Dt}{L^2}\right) \cong 0.45 \tag{A.10}$$

where D is the diffusion rate in square centimeters per second, t is the time in seconds, and L is the thickness of the diffusion barrier. For Type 316 stainless steel, the value for the diffusion rate is as shown in Equation A.10a:

$$D = 4.7\times10^{-3}\ e^{-12,900/RT} \tag{A.10a}$$

and the corresponding value for R, in the appropriate units, is 1.987 calorie per mole-Kelvin. With a nominal wall thickness of 0.125 inches [0.318 cm], Equation A.10 indicates that it will take about 875 years to reach steady-state permeation, at a temperature of 25 °C. At 100 °C, the time frame will be reduced to about 11 years, and at 500 °C, it only takes about 12 hours.

A.8 Organics

With the introduction of organic materials into any tritium-handling system, the matrix of solubility considerations becomes complicated to its maximum extent because the simple solubility reactions, such as those shown above as Equations A.4a, A.4b, and A.4c, are no longer working by themselves. With the availability of free tritium dissolved into the internal volume of the organic material, the molecular surroundings of the organic material see a local perturbation in their own internal systems, and Le Châtelier's Principle indicates that the system will adjust to the perturbation with the establishment of a new equilibrium. Under such circumstances, exchange reactions can be expected to dominate over simple solubility reactions, and the available tritium can be expected to replace the available protium in any and all available sites. Once the tritium has been incorporated into the structure of the organic material, the structure begins to break down from the inside out, primarily as a result of the tritium decay energy.

The specific activity of tritium gas at atmospheric pressure and 25 °C is 2.372 Ci/cm^3. The expected range of the average energy tritium beta particle in unit density material is only 0.42 micrometer (µm). This means that all energy from the decay of the dissolved tritium is deposited directly into the surrounding material. At 2.372 Ci/cm^3, this becomes equivalent to 2.88×10^4 rads/hour.

The general rule for elastomers used for sealing is that total radiation levels of 10^7 rads represent the warning point that elastomers may be losing their ability to maintain a seal. At 10^8 rads, virtually all elastomers used for sealing lose their ability to maintain a seal. Typical failures occur as a result of compression set (i.e., the elastomer becomes brittle and loses its ability to spring back). At 10^6 rads, on the other hand, the total damage is relatively minor, and most elastomers maintain their ability to maintain a seal. At 10^7 rads, the ability of an elastomer

to maintain a seal becomes totally dependent on the chemical compounding of the elastomer in question. It only takes about 2 weeks for an elastomer to receive 10^7 rads at a dose rate of 2.88×10^4 rads/hour. Elastomers, therefore, cannot be used for sealing where they might be exposed to high concentrations of tritium.

Similar analogies can be drawn for all organic materials. The preferred rule of thumb is that the use of all organic materials should be discouraged wherever they might be exposed to tritium. Since this is neither possible nor practical, the relative radiation resistance for several elastomers, thermoplastic resins, thermosetting resins, and base oils is shown graphically in Figure A-3, Figure A-4, Figure A-5, and Figure A-6, respectively.

The damage done to organic materials by the presence of tritium in the internal structure of the material is not limited to the more obvious radiation damage effects. Tritium, particularly in the form of T^+, has the insidious ability to leach impurities (and nonimpurities) out of the body of the parent material. In many cases, particularly where halogens are involved, the damage done by secondary effects, such as leaching, can be more destructive than the immediate effects caused by the radiation damage. In one such case, the tritium contamination normally present in heavy water up to several curies per liter was able to leach substantial amounts of chlorides out of the bodies of neoprene[3] O-rings that were used for the seals. The chlorides leached out of the O-rings were subsequently deposited into the stainless-steel sealing surfaces above and below the trapped O-rings, which led directly to the introduction of chloride-induced, stress-corrosion cracking in the stainless steel.

The operational conditions that set up the introduction of the stress-corrosion cracking were moderately elevated temperatures (i.e., less than 100 °C), low pressures (i.e., less than 3 atmospheres), and exposure times of 3–5 years. Fortunately, the damage was discovered before any failures occurred. The neoprene O-rings were removed, and the seal design was changed to a non-O-ring type of seal.

In a second case, six failures out of six tests occurred when high-quality Type 316 stainless steel was exposed to tritium gas in the presence of Teflon™ shavings and 500 parts per million moisture. All the failures were catastrophic, and all were the result of massively induced stress-corrosion cracking. The conditions that set up the introduction of the massively induced stress-corrosion cracking in this case were moderately elevated temperatures (i.e., 104 °C), relatively high pressures (i.e., 10,000 to 20,000 psi), and exposure times that ranged from 11 to 36 hours. Since the time to failure for all the tests was directly proportional to the pressure (i.e., the higher pressure tests failed more quickly than the lower pressure tests), since identical control tests with deuterium produced no failures, and since comparable testing without the Teflon™ shavings indicated no failures after 3,200 hours, it was concluded that fluorides were being leached out of the Teflon™ and deposited directly into the bodies of the stainless steel test vessels. An interesting sideline to this test is that, after the tests, the Teflon™ shavings showed no obvious signs of radiation damage (i.e., no apparent discoloration or other change from the original condition).

[3] The proper chemical name for neoprene is “chlorobutadiene.”

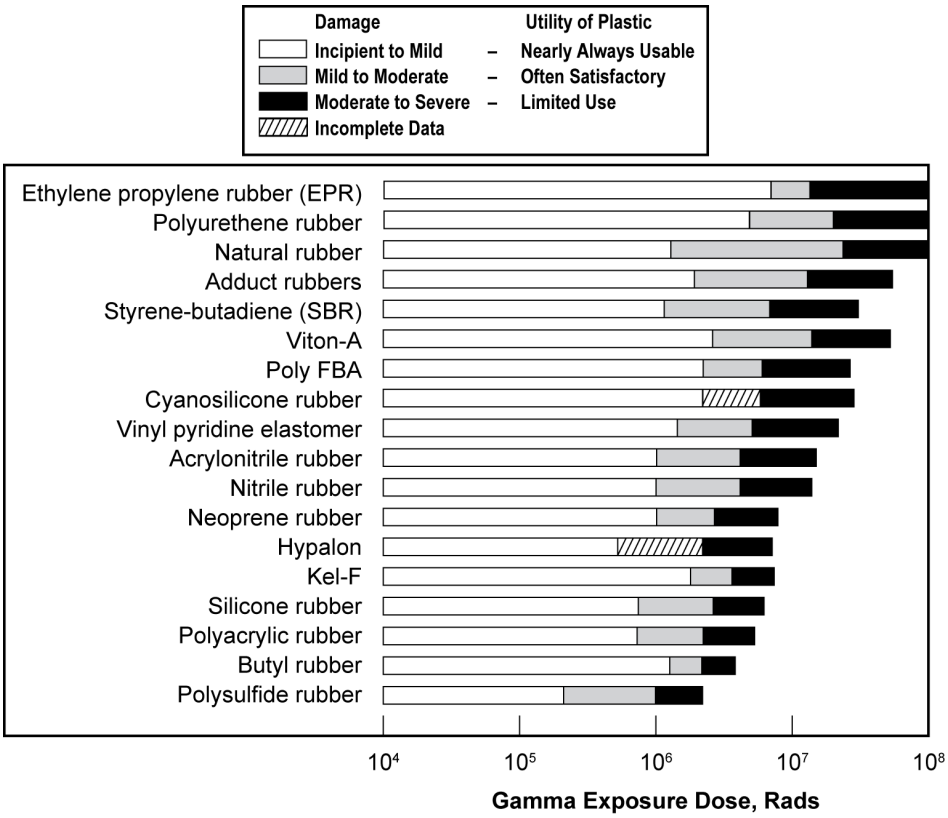

Figure A-3 Relative Radiation Resistance of Elastomers

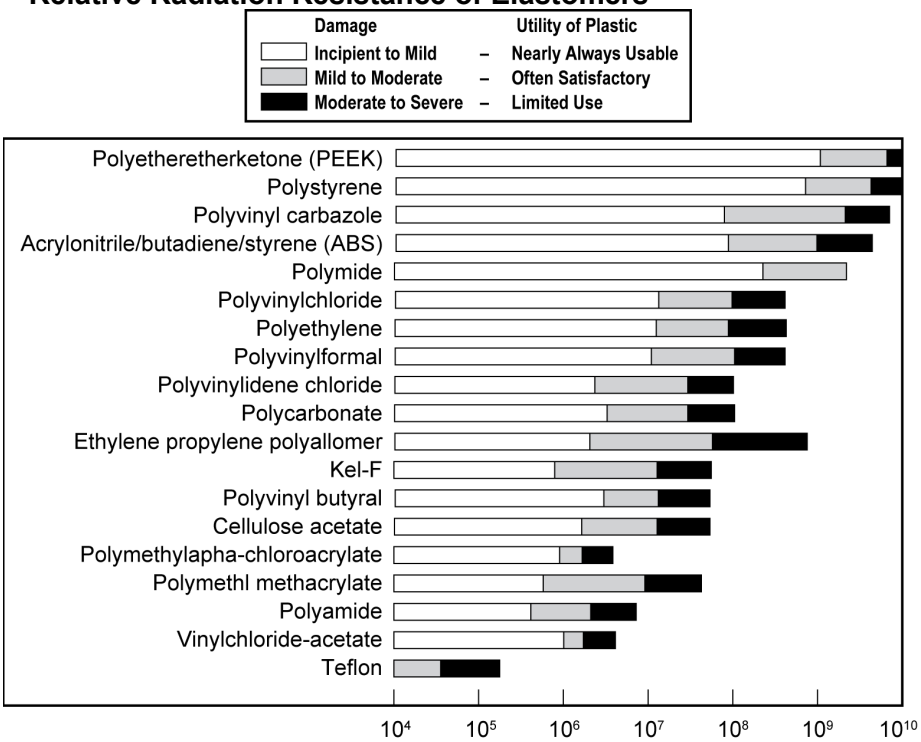

Figure A-4 Relative Radiation Resistance of Thermoplastic Resins

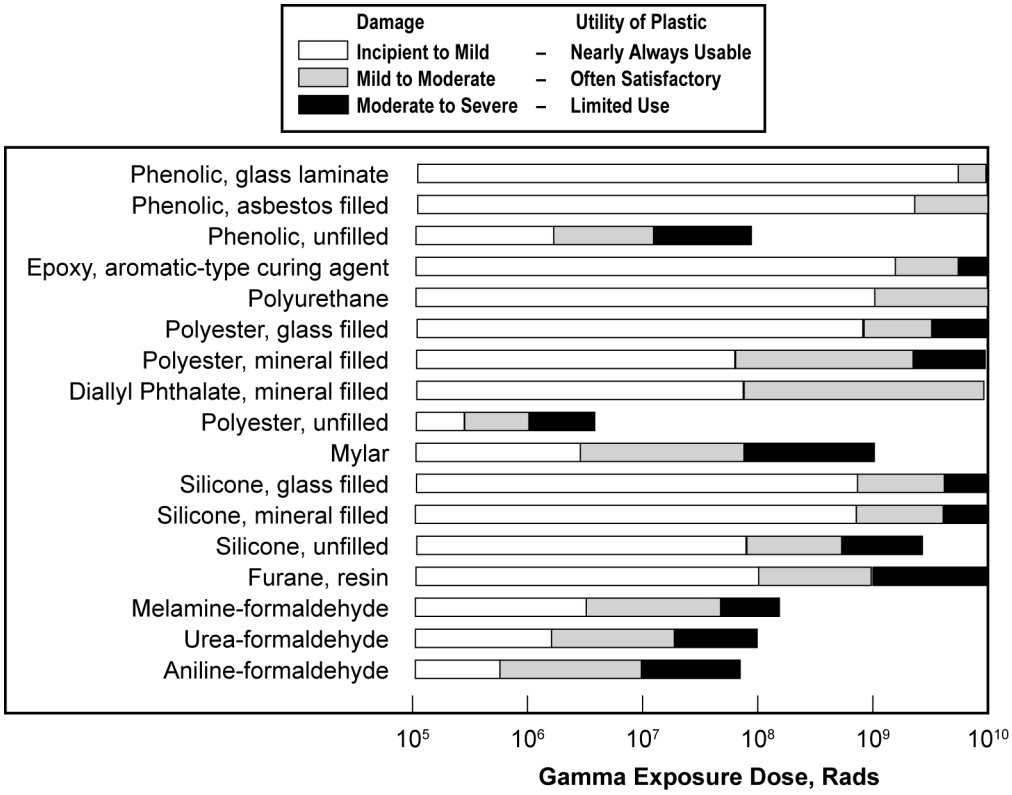

Figure A-5 Relative Radiation Resistance of Thermosetting Resins

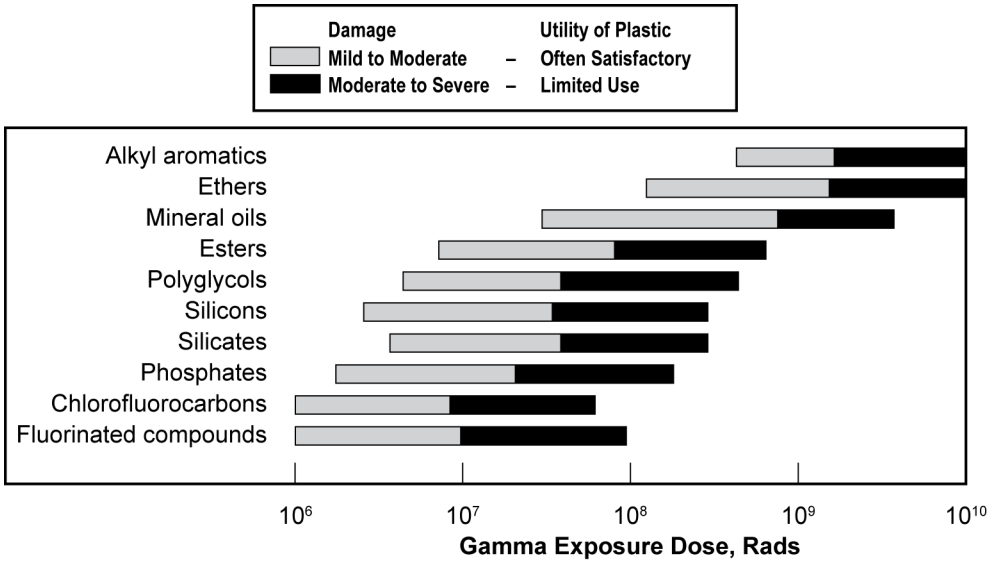

Figure A-6 Relative Radiation Resistance of Base Oils

A.9 Outgassing from Bulk Materials

Discussions on the outgassing from bulk materials can be subdivided into two parts: (i) outgassing from surfaces that have been wetted with tritium, and (ii) outgassing from surfaces that have not been wetted with tritium. For surfaces that have been wetted with tritium, the behavior of the outgassing should be virtually identical to that described above. For surfaces that have not been wetted with tritium, it should be assumed that the source of the outgassing is from tritium that has been dissolved in the body of the parent material.

As the saturation level in the body of the bulk material is reached, the dissolved tritium begins to emerge from the unexposed side of the material surface, where it then begins to move through the monomolecular layers of water vapor on that side. In the initial stages, the pattern of the tritium moving into these monomolecular layers tends to resemble the reverse of that described in the surface contamination model described above (i.e., the tritium is incorporated first into the very-tightly-bound, near-surface layers, then into the intermediate layers, and finally into the loosely bound, outer layers). As the tritium saturation levels in the body of the bulk material gradually reach steady-state, the tritium levels moving into the monomolecular layers gradually build over time, and the pattern slowly changes from one of a reverse surface-contamination model to one of a reverse outgassing model (i.e., the level of outgassing from any given surface can be expected to increase until it too reaches a steady-state, equilibrium level with its own local environment).

A.10 References

U.S. Department of Energy, “Design Considerations,” DOE-HDBK-1132-99, U.S. Government Printing Office, Washington, D.C., April 1999. (Note: The bulk of the material presented in this attachment has been adapted from this reference. See, in particular, Sections 2.10.1 through 2.10.6, pp. 1-86 through 1-109.)

A.11 Suggested Additional Reading

U.S. Department of Energy, “Primer on Tritium Safe Handling Practices,” DOE-HDBK-1079-94, December 1994.

U.S. Department of Energy, “Radiological Training for Tritium Facilities,” DOE-HDBK-1105—2002 Chg Notice 2, May 2007.

U.S. Department of Energy, “Tritium Handling and Safe Storage,” DOE-HDBK-1129-2015, September 2015.

ATTACHMENT B BIOLOGICAL PROPERTIES OF TRITIUM AND TRITIUM HEALTH PHYSICS

(Note: With the exception of Sections B.5.1.1.1, B.5.1.1.2, and B.5.1.1.3, the bulk of the material presented in this attachment was adapted from Sections 3 and 4 of the U.S. Department of Energy's "Health Physics Manual of Good Practices for Tritium Facilities" (DOE, 1991). Although some of the information may appear to be somewhat dated, the basic concepts behind the information have not changed since that time.[1] See also the information presented in Attachment A.)

B.1 Biological Properties of Tritium

B.1.1 General

Tritium is usually encountered in the workplace as tritium gas (HT, DT, or T_2) or as tritiated water, or water vapor (i.e., HTO, tritiated heavy water (DTO), or T_2O). Other forms of tritium also exist, such as tritiated surfaces, metal tritides, tritiated pump oil, and tritiated gases. While some minor isotopic differences in reaction rates have been noted, deuterated and tritiated compounds generally have the same biological properties as the hydrogenated compounds. These various tritiated compounds will have a wide range of uptake and retention in humans under identical exposure conditions. Tritium gas, for example, represents one end of the spectrum, in that the body has no physiological use for elemental hydrogen regardless of its isotopic form and can easily be exhaled. Water vapor, on the other hand, represents the opposite end of the spectrum because it is readily taken up and retained by the body. Less is known about the uptake and retention of other tritiated compounds.

B.1.2 The Metabolism of Gaseous Tritium

The biological mechanisms for inhalation exposure to gaseous tritium are similar to the biological mechanisms for airborne nitrogen: (i) small amounts of the gas will be dissolved in the bloodstream according to the laws of partial pressures, (ii) the dissolved gas will be circulated in the bloodstream with a resident half-time of about 2 minutes, and (iii) most of the gas will subsequently be exhaled along with the gaseous waste products carbon dioxide and normal water vapor. A small percentage of the gaseous tritium will be converted to the oxide form (HTO), most likely in the gastrointestinal tract. Early experiments showed that the total biological conversion to HTO can range from 0.004 percent to 0.1 percent of the total gaseous tritium inhaled. More recent experiments with six volunteers resulted in a conversion of 0.005 percent with an uncertainty in the average conversion rate of ±0.0008 percent.

Skin absorption of gaseous tritium has been found to be negligible when compared to inhalation. Small amounts of tritium can enter skin through contact with contaminated surfaces and result in elevated organically bound tritium in tissues and in urine (see Sections B.1.4 and B.1.5). Hence, for gaseous tritium exposures, there is a lung dose from the tritium in the air in the lung, and a whole body dose from the tritium gas that has been converted to water. This in vivo converted tritiated water will, of course, act like an exposure to tritiated water.

---

[1] Additional Note: Because the bulk of the information presented in this attachment is presented in a paraphrased format, it is suggested that the reader refer directly to DOE 1991 for additional information, which does include all the references to the original citations.

B.1.3 The Metabolism of Tritiated Water

The biological incorporation (uptake) of airborne HTO can be extremely efficient—up to 99 percent of inhaled HTO can be taken into the body within seconds. Ingested liquid HTO is almost completely absorbed by the gastrointestinal tract and quickly appears in the venous blood. Within minutes, it can be found in varying concentrations in the various organs, fluids, and tissues of the body. Skin absorption mechanisms also become important because the internal temperature of the body is regulated, to a large extent, by "breathing" water vapor in and out through the pores of the skin. For skin temperatures in the range of 30 to 40 °C, it has been shown that the percutaneous absorption of HTO is about equal to that for HTO by inhalation. Thus, it can be expected that, independent of the absorption mechanism, absorbed HTO will be uniformly distributed in all biological fluids in time frames that range from 45 minutes to 2 hours. Therefore, very shortly after an exposure to HTO, the tritium will be uniformly spread throughout the tissue of the body in body water and in the exchangeable (labile) hydrogen sites in organic molecules. This tritium will have a retention that is characteristic of water. A small fraction of the tritium will become incorporated into nonexchangeable hydrogen sites in organic molecules, giving rise to a long-term retention that is characteristic of the turnover of cellular components, which can be adequately modeled as the sum of two exponentials. Hence, retention of tritiated water can be described as the sum of two exponentials, one characteristic of body water, and two longer-term components that represent tritium incorporated into nonlabile cellular hydrogen sites.

B.1.4 The Metabolism of Other Tritiated Species

As mentioned above, most tritium will be in the form of tritiated hydrogen gas or tritiated water. However, tritium-handling operations will result in the production of other forms of tritium, such as tritiated surfaces, metal tritides, pump oils, and a wide variety of "other" tritiated species, some of which are discussed below.

B.1.4.1 Tritiated Surfaces

Studies have shown that when there is contact between skin and a surface that has been exposed to high concentrations of tritium gas, tritium is transferred to the body in an organic form. This organically bound tritium gives rise to elevated tritium concentrations in skin at the point of contact and in other tissues, and a large amount of organically bound tritium in urine. The full metabolic pathway of this organically bound tritium is unknown, but models that have been developed suggest that the dose to skin at the point of contact is the limiting factor in exposures of this type.

B.1.4.2 Metallic Tritides

Although a broad spectrum of metals is commonly used for the storage, pumping, and packaging of tritium, there is little data on their metabolic properties. However, some compounds are unstable in air (e.g., uranium tritide, lithium tritide). For these, exposure to air produces totally different results: uranium tritide, being pyrophoric, releases large quantities of tritiated water; lithium tritide, being a hydroxyl scavenger, releases large quantities of tritium gas.

At the other end of the spectrum, metallic tritides such as titanium, niobium, and zirconium tritides are very stable in air. For these, the organ of concern must be primarily the lung, and one relies on lung deposition models such as the one presented in the International

Commission on Radiological Protection's Publication 30 (ICRP-30) (ICRP, 1979). However, there are difficulties with using such models. Depending on the particle size distribution of the metallic tritide inhaled, lung-retention estimates can be in error by up to 80 percent. Also, cross-correlations of lung-retention estimates are based on the tritium leaching ability of biological fluids, which are dependent on the chemical and physical form of the material in question. These particles may also produce organically bound tritium from contact with lung tissue, and this would further compound the metabolic uncertainties.

B.1.4.3 Generic Tritiated Solids

The formation of generic tritiated solids can be expected to occur in all normal solid materials that are routinely exposed to tritium. Depending on the composition of the material, tritiation will occur through exchange reactions and/or through mechanisms such as solubility, permeation, and diffusivity. The specific activity of such materials can be expected to vary in relation to the relative concentration of the exposing gas, the relative humidity of the exposing gas, and the total reaction time. Radiation damage may also be expected, particularly in cases where possible exposure mechanisms lead to embrittlement.

Because little is known about the metabolic behavior of generic tritiated solids, each must be considered separately. For example, solid materials that tend to become embrittled should be considered in the same metabolic category as metallic tritides. Such materials would include, but not be limited to, Teflon™ valve seats (from dry environs). Other materials, such as those that degrade over time or those that give up their tritium easily (outgas), can be considered as possible inhalation hazards, possible skin absorption hazards, or both.

B.1.4.4 Tritiated Liquids

Next to HTO, the most commonly encountered tritiated liquid is tritiated vacuum pump oil. Comparisons between facilities have shown that the specific activities of pump oils can easily range from a few millicuries per liter to a few tens of curies per milliliter. The wide range in specific activities may be due to situation-specific variations in total throughputs for tritium and ambient water vapor. As a first approximation, the metabolic routes for tritiated vacuum pump oils can be taken as being similar to the metabolic routes for HTO.

Next to pump oils, the most commonly encountered group of tritiated liquids is tritiated solvents. Since all solvents, by their nature, can be expected to have a skin absorption pathway, and since most solvents are relatively volatile, the metabolic pathways for tritiated solvents can, as a first approximation, be expected to be similar to the pathways for HTO. However, families of solvents have specific organs of concern and, in most cases, the initial organ of interest will not be the body water, but the liver. Hence, exposure to tritiated solvents may result in significant differences between the establishment of body water equilibria from that observed for tritiated water.

The error in uptake and retention introduced by treating tritiated liquids as HTO will vary greatly with the individual chemical form.

B.1.4.5 Tritiated Gases

Although few gaseous reactions can compete with the energetically favored formation of HTO, other tritiated gases, such as tritiated methane, can be formed. The details of the metabolic

pathways should be generally similar to gaseous tritium. Again, the errors introduced by this approximation are unknown.

B.1.5 Metabolic Elimination

B.1.5.1 Single-Compartment Modeling of HTO Retention

Studies of biological elimination rates in humans for heavier-than-normal water species go back to 1934, when the body water turnover rate of a single subject was measured using hydrogen-deuterium oxide (HDO). Since that time, several additional studies have been conducted on a number of subjects with HDO and HTO, the HTO studies being more prevalent. Table B-1 presents a summary of these data.

Table B-1 Heavier-than-Normal Biological Half-Life

Water species	Number of subjects	Measured T_{Bio} (days)
HDO	1	9 to 10
HDO	21	9.3 ±1.5
HTO	8	9 to 14
HTO	20	5 to 11
HTO	8	9.3 to 13
HTO	10	7.5 ±1.9
HTO	5	9.5 (average)
HTO	6	8.5 (average)
HTO	310	9.5 ±4.1

A simple average of the data summarized in Table B-1 suggests a value of 9.4 days for the measured biological half-life. Also, the data deviate from this simple average by as much as ±50 percent. As is discussed below, there are good reasons for such large deviations.

As a first approach to modeling the observed biological half-life, one can use Equation B.1:

$$A = A_0 \, e^{-(\ln 2 \, t)/(T_{Bio})}, \qquad \text{(B.1)}$$

where A_0 is the total body water mass, A is the amount of body water remaining after a given time (t), and T_{Bio} is the biological half-life.

From reference man data (i.e., ICRP Publication 25 (ICRP-25) (ICRP, 1977)), values of 42 kilograms (kg) and 3 kg are obtained for the total body water mass and the average daily throughput of water, respectively. Thus, the elimination rate is 3/42 = 0.0714 day^{-1}, and the theoretical biological half-life for HTO is as shown in Equation B.2:

$$T_{Bio} = \ln 2/0.0714 = 9.7 \text{ days}, \qquad \text{(B.2)}$$

which compares very favorably with the 9.4-day average value determined from Table B-1.

The above modeling and values are also based on the assumption that the biological half-life of tritium will be a function of the average daily throughput of water. This part of the hypothesis, therefore, must also be in agreement with experimental and theoretical crosschecks.

It has been observed experimentally that, when the water intake was 2.7 liters per day, the half-life for HTO was 10 days; when the water intake was increased to 12.8 liters per day, the half-life dropped to 2.4 days. Using these values, Equation B.1 produces values of 10.4 days and 1.9 days for the respective half-lives. Agreement of experimental observations with the simple model is very good, and for the high-intake value, the lack of better agreement should not be a serious concern considering model simplicity. Without medical intervention (i.e., diuretics), the metabolic efficiency of the processes of forced fluids can require modification of the model. Other factors that affect the biological half-life of HTO in the human body are discussed below.

Comparisons have also been made of biological half-lives versus mean outdoor temperatures at the time of tritium uptake. The data suggest that biological half-lives are shorter when assimilations occur in the warmer months. For example, the 7.5±1.9-day half-life shown in Table B-1 begins to fall into line when it is noted that the data were taken in Southern Nigeria, where the mean outdoor temperature averages 80 °F. In contrast, the 9.5±4.1-day half-life shown in Table B-1 was determined over a multiyear period in North American climes, where the mean outdoor temperature averaged 63 °F. Such findings are consistent with metabolic pathways involving sensible and insensible perspiration. As such, the skin absorption/desorption pathways can become an important part of body metabolic throughput of normal water.

Lifestyles also have significant potential influence on the variation of biological half-lives. In one case, for example, the biological half-life of tritium in an adult male was followed for approximately 4 months following an acute exposure, during which time the half-life appeared to fluctuate back and forth between 4 and 10 days at regular intervals. Closer scrutiny revealed that the subject was a weekend jogger. As a result, the appearance of two very different biological half-lives was totally valid.

Variations in biological half-lives have also been shown to be inversely correlated with age. In these cases, however, the data suggest that age correlations introduce variations in the biological half-life of no more than ±20 percent. When compared to reduction factors of 50 to 250 percent produced by total fluid throughput and/or skin temperature correlations, age correlations are a secondary correction.

B.1.5.2 Multi-Compartment Modeling

For single-compartment modeling, the half-life of interest is that for HTO in the body water. Although it has been observed that the half-life can vary by more than a factor of 2 for the same person, the HTO component of the biological half-life can be expected to be about 10 days. As was noted in Section B.1.3, however, prolonged exposures can be expected to show signs of two additional components that range from 21 to 30 days and 250 to 550 days, respectively. The former reflects the existence of a labile organic pool; the latter suggests the existence of a more tightly bound organic pool.

For purposes of dose calculations, however, the overall contribution from organically bound tritium has been found to be relatively small, i.e., less than about 5 percent. The ICRP methods for computing the annual limits on intake in air and water utilize the body-water component only, including the assumption of a 10-day biological half-life (ICRP, 1979).

B.2 Bioassay and Internal Dosimetry

Exposure to tritium oxide (HTO) is by far the most important type of tritium exposure, and it results in the distribution of HTO throughout the body's soft tissue. The HTO enters the body by inhalation or skin absorption. When immersed in airborne HTO, intake through the lungs is approximately twice that absorbed through the skin. The average biological half-life of tritium is 10 days, but it can vary naturally by 50 percent or more and is dependent on the body-water turnover rate. This has been verified by calculation and by actual measurements of tritium concentrations in body water following exposure. Following exposure to HT, the gas is taken into the lungs and, according to the laws of partial pressures, some is dissolved in the blood stream, which distributes the HT to the body water.

When a person is exposed to HT in the air, two kinds of exposures actually result: one to the lungs and one to the whole body. According to ICRP-30, the lung exposure is the critical one, resulting in an effective dose 25,000 times less than would result from an equal exposure to HTO (for workers doing light work).[2] However, during exposure to HT, a small fraction of the tritium in the blood is transferred to the gastrointestinal tract, where it is rapidly oxidized by enzymes in the gut. This results in a buildup of HTO, which remains in the body (with its usual half-life), while the HT is rapidly eliminated following the end of the exposure. The resultant dose from the exposure to this HTO is roughly comparable to the effective dose from the lung exposure to HT. Thus, for both HTO and HT exposures, a bioassay program that samples body water for HTO is an essential element of a good personnel-monitoring program for tritium.

B.2.1 Sampling Schedule and Technique

Following an exposure to HTO, it is quickly distributed throughout the blood system and, within 1 to 2 hours, throughout the extra- and intra-cellular volumes and the remaining body water. Once equilibrium is thus established, the tritium concentration is found to be the same in samples of blood, sputum, and urine. For bioassay purposes, urine is normally used for determining tritium concentrations in body water.

Workers potentially or casually exposed to tritium are normally required to submit urine samples for bioassay on a periodic basis. The sampling period may be daily to biweekly or longer, depending on the potential for significant exposure. Usually, the period is weekly to biweekly.

Following an incident, or a work assignment with a higher potential for exposure, a special urine sample is usually required for each individual involved. The preferred method is to wait about 2 to 4 hours for the equilibrium to be established. The bladder is then voided. A sample submitted soon thereafter should be reasonably representative of the body-water concentration.

---

[2] As was noted at the beginning of this section, the bulk of the information presented in this section was originally published in 1991. Since that time, more up-to-date dose, and dose assessment, models have been developed. See, for example, the references in Section B.9, "Suggested Additional Reading: (i) the U.S. Environmental Protection Agency's Federal Guidance Report No. 13, and (ii) Peterson and Davis, "Tritium Doses from Chronic Atmospheric Releases: A New Approach Proposed for Regulatory Compliance," both of which were published in 2002.

A sample collected before equilibrium is established will not be representative because of dilution in the bladder or because the initial concentration in the blood will be higher than an equilibrium value. However, any early sample may still be useful as an indication of the potential seriousness of the exposure.

At the bioassay laboratory, 1 milliliter (ml) of the urine is typically mixed with 10 to 15 ml of a suitable scintillation cocktail and counted in a liquid scintillation counter. At many laboratories, the urine is initially counted raw, and if the concentration is above a certain value (e.g., 0.1 microcurie per liter (μCi/l)), the urine is distilled or spiked with a standard and recounted. The counting efficiency may be affected by quenching, although this can be corrected electronically.

The dose equivalent rate in the body water can be calculated directly from the concentration of HTO in body water, which, until recently, was considered to be equivalent to the dose rate to the critical organ. ICRP-30 states that the average dose to the soft tissue could be taken to be equal to the effective dose equivalent. This change effectively dilutes the tritium, and thereby lowers the dose rate accordingly.

From this discussion, the dose equivalent rate, $R(t_0)$, to the soft tissue (63 kg), from a urine concentration of C_0 can be calculated as shown in Equation B.3:

$$\begin{aligned} R(t_0) &= C_0\left(\frac{\mu\text{Ci}}{l}\right) \times 3.7\times10^4\left(\frac{\text{Bq}}{\mu\text{Ci}}\right) \times 5.7\times10^3\left(\frac{\text{eV}}{\text{Bq}}\right) \times 8.64\times10^4\left(\frac{\text{sec}}{\text{day}}\right) \\ &\times \frac{42\,l}{6.3\times10^4\ \text{grams}} \times 1.6\times10^{-12}\,\frac{\text{erg}}{\text{eV}} \times 10^{-2}\,\frac{\text{rad-gram}}{\text{erg}} \times 1.0\,\frac{\text{rem}}{\text{rad}} \\ &= 1.94\times10^{-4}\,C_0\,\frac{\text{rem}}{\text{day}}. \end{aligned} \tag{B.3}$$

From the dose rate R(t), the committed dose (D_∞) can be calculated from Equation B.4:

$$D_\infty = \int_0^\infty R(t)\,dt. \tag{B.4}$$

Following a bioassay measurement, the quantity R(t) can be estimated from an assumed biological half-life. A previously measured value (for that individual) or the average value (for reference man) of 10 days may be used. In that case, Equation B.4 becomes Equation B.5:

$$\begin{aligned} D_\infty &= R(t_0)\int_0^\infty e^{-\lambda t}\,dt = R(t_0)\int_0^\infty e^{-0.693t/T_{Bio}}\,dt \\ &= \frac{R(t_0)}{0.693}, \end{aligned} \tag{B.5}$$

where, D_∞ is the committed dose equivalent, $R(t_0)$ is the daily dose rate at $t = t_0$, λ is the elimination constant, and T_{Bio} is the biological half-life in days. However, if a more precise calculation of the individual's dose is required, the actual biological half-life should be determined from the values of subsequent bioassay data.

For very low exposures (<1 to 10 μCi/l), no great error is incurred by assuming a constant half-life between weekly sampling points. For higher exposures, a greater sampling frequency is recommended to determine the dose more accurately.

As was noted above, a pure HT exposure can be thought of as a combination of a lung exposure from the HT and a whole-body exposure from the HTO converted from the HT dissolved in the blood. The whole-body dose can be determined as outlined above by analysis for HTO in the urine. Since the effective dose equivalents from the lung and whole-body exposures are approximately equal, the total effective dose can be conservatively obtained by multiplying the HTO whole-body dose by 2.

In general, this is too conservative (by the factor of 2) because a release of pure tritium gas with <0.01 percent HTO is highly unlikely. With only a slight fraction (~1 percent) of HTO in the air, the effective dose is essentially the HTO whole-body dose as determined by bioassay.

In any exposure to HTO, a certain small fraction of the tritium will exchange with nonlabile organic hydrogen in the body, there to remain until metabolism or exchange eliminates the tritium. Following a high acute or any chronic exposure, two- and three-component elimination curves have been observed (ranging from 30 to 230 days). Although most of the dose is due to the HTO in all of these observed cases, such exposures should be followed until urine concentrations are down to the range of <0.1 to 1 μCi/l, in order to calculate the dose more precisely.

It has also been observed that skin contact with metal surfaces contaminated with T_2 or HT produces tritium-labeled molecules in the skin (possibly catalyzed by the metal), which in turn results in longer elimination times for the labeled or metabolized constituents. Lung exposure to airborne metal tritides may also cause unusual patterns of tritium concentrations in body water, due, supposedly, to retention of these particulates in the lung with subsequent leaching and conversion to organically bound tritium. For these and other reasons, it is good practice to follow the elimination data carefully, and to look for organically bound tritium in the urine.

B.2.2 Dose Reduction

As was noted above, the committed dose following an HTO exposure is directly proportional to the biological half-life, which in turn is inversely proportional to the body-water turnover rate. This rate varies from individual to individual. As may be expected, such things as temperature, humidity, work, and drinking habits may cause rate variations. Although the average biological half-life is 10 days, it can be decreased by simply increasing fluid throughput, especially of liquids that are diuretic in nature (e.g., coffee, tea, beer). The half-life may then be easily reduced to 4 to 5 days; however, a physician should be consulted before any individual is placed on a regimen that might affect his or her health. It is essential that medical supervision be involved if diuretics are taken because the resultant loss of potassium and other electrolytes can be very serious if it is not replaced. Such drastic measures may result in a decrease in half-life to 1 to 2 days. Even more drastic is the use of peritoneal dialysis or a kidney dialysis machine. These may reduce the half-life to 13 and 4 hours, respectively. Such techniques are extreme and should be used only in life-threatening situations, involving potential committed dose equivalents that would exceed a few hundred rem without such treatment.

Individuals whose urine concentrations exceed established limits should be relieved from work involving possible further exposure to radiation, whether from tritium or other sources. Limits are generally suggested or imposed by the health physics organization to make certain that the

annual worker dose limits are not exceeded. The operating group may impose even stricter limits on their staff than those imposed by the health physics group. The actual values, which may range from 5 to 100 μCi/l, are often dependent on the availability of replacement personnel and the importance of the work that needs to be accomplished.

Results of bioassay sampling should be given to workers who submit samples as soon as they are available. The results may be posted, or the workers may be personally notified. Moreover, the results are required to be kept in the workers' personal radiation exposure records or medical files. Like any other radiation exposure, any dose in excess of the regulatory limits must be reported to the appropriate authorities.

B.3 Measurement Techniques

Because an extensive review of tritium measurement techniques is beyond the scope of this document, it will be assumed that the reader is already acquainted with the fundamentals of radiation-detection instruments. However, for those not familiar, an extensive review of tritium measurement techniques can be found in National Council on Radiation Protection and Measurements (NCRP) Report No. 47 (NCRP. 1976). Moreover, a review of site-specific measurement techniques can also be found in the U.S. Atomic Energy Commission's (AEC's) WASH-1269, "Tritium Control Technology" (AEC, 1973). The bulk of the following has been adapted from both sources. Since both documents were published in the 1970s, it can be expected that some of the information will be dated, although the basic measurement techniques have changed very little since that time.[3]

This section discusses instruments or techniques used for monitoring tritium for health and safety purposes. However, since process-monitoring instruments often involve the same or similar detectors, they are also included in the discussion.

B.3.1 Air Monitoring

Ionization chamber instruments are the most widely used instruments for the measurement of tritium in gaseous (and vapor) forms in laboratory, environmental, and process monitoring applications. Such simple, economical devices require only an electrically polarized ionization chamber, suitable electronics, and, in most cases, a method for moving the gas sample through the chamber, which is usually a pump. Chamber volumes typically range from a tenth to a few tens of liters, depending on the required sensitivity. The output is generally given in units of concentration (multiples of $\mu Ci/m^3$ or becquerels per cubic meter), or, if a commercial electrometer or pico-ammeter is used, in current units, which must then be converted to concentration. A rule of thumb that can be used to convert current to concentration is concentration ($\mu Ci/m^3$) = 10^{15} × current (amps)/chamber volume (liters). For real-time tritium monitoring purposes, the practical lower limits of sensitivity range from 0.1 to 10 $\mu Ci/m^3$.

For measurements of low concentrations, sensitive electrometers are needed. For higher concentrations (e.g., >1 millicuries per cubic meter (mCi/m^3)), the requirements on the electronics can be relaxed, and smaller ion chambers may be used. Smaller chambers also need less applied voltage, but because of a greater surface-area-to-volume ratio, there is a

[3] For more recent information on the measurement techniques used at various DOE sites, see also the references cited in Section B.9, "Suggested Additional Reading: (i) "Primer on Tritium Safe Handling Practices," DOE-HDBK-1079-94, December 1994; (ii) "Radiological Training for Tritium Facilities," DOE-HDBK-1105–2002 Chg Notice 2, May 2007; and (iii) "Tritium Handling and Safe Storage," DOE-HDBK-1129–2015, September 2015.

greater likelihood for residual contamination in the chamber, which elevates the background. Response times for higher level measurements can be made correspondingly shorter. However, small chambers and chambers operated at low pressures may have significant wall effects so that the above rule of thumb may not apply. Such instruments would have to be calibrated to determine their response.

Although most ionization chambers are of the flow-through type that require a pump to provide the flow, there are presently a number of facilities that use so-called “open window” or “perforated wall” chambers. These chambers, which may employ a dust cover to protect the chamber from dust and other particulates, allow the air or gas to penetrate through the wall to the inside chamber. Such instruments are currently being used as single-point monitors at several facilities for room, hood, glove box, and duct monitoring.

B.3.2 Differential Monitoring

Because of the greater toxicity of HTO compared to HT (25,000 times greater according to ICRP-30), it is often desirable to know the relative amounts of each species following a release into a room, or release to the environment. In the case of stack monitoring, this is more easily accomplished by taking discrete samples of the stack effluent using bubblers or desiccants in conjunction with a catalyst for oxidizing the HT (see Section B.3.3). For differential monitoring, the simplest technique is to use a desiccant cartridge in the sampling line of an air monitor. The result is a measurement of the HT concentration. Without the cartridge, the total tritium concentration is measured. Subtraction of HT from the total produces the HTO concentration. The technique may be used manually with one instrument or automatically by switching a desiccant cartridge in and out of the sampling line.

Another technique involves the use of a semipermeable membrane tube bundle in the sampling line to remove the HTO (preferentially over the HT), which is then directed to an HTO monitor. After removing the remaining HTO with another membrane dryer, the sampled air is directed to the HT monitor. Although this technique is slower than the one requiring a desiccant cartridge (response and equilibrium times being 1 to 2 minutes and 10 to 20 minutes, respectively), it does not require a periodic cartridge replacement. Furthermore, it can be adapted to the measurement of tritium in both species in the presence of noble gases or other radioactive gases by adding a catalyst after the HTO dryers, followed by additional membrane dryers for the HTO converted from the HT by the catalyst.

B.3.3 Discrete Sampling

Discrete sampling differs from real-time monitoring in that the sampled gas (usually air) must be analyzed for tritium content by means of liquid scintillation counting (in the case of HTO). The usual technique is to flow the sampled air through either a solid desiccant (molecular sieve, silica gel, Drierite™) or water or glycol bubblers. For low-flow rates (approximately 0.1 to 11/min), bubblers may be used. Bubblers are more convenient for sampling but are less sensitive than the solid desiccant technique.

Glycol or water may be used, but glycol is generally preferred for long-term sampling. In any case, the collected water is then analyzed for HTO. For differential monitoring of HTO and HT, a heated catalyst (usually a palladium sponge) is used between the HTO desiccant cartridge or bubblers and the HT cartridge or bubblers. In a different arrangement, palladium is coated on the molecular sieve in the HT cartridge to oxidize and absorb the resulting HTO. This technique, however, is usually only employed for environmental monitoring.

Another technique for sampling HTO in air is to use a “cold finger” to freeze HTO out of the air; an alcohol and dry ice mixture in a stainless-steel beaker works well. To arrive at the concentration, knowledge of the relative humidity is needed. A soft plastic bottle squeezed several times to introduce the air (containing the HTO) into the bottle is another method. A measured quantity of water is then introduced, and the bottle is capped and shaken. In a minute or less, essentially all the HTO is taken up by the water, which is then analyzed.

Other techniques involve placing a number of vials or other small, specially designed containers of water, liquid scintillation counting cocktail, or other liquid in selected locations in the area being monitored. After a period of time (usually a number of days) the liquid in the containers is analyzed. The result is semiquantitative (for open containers) to quantitative (for specially designed containers).

B.3.4 Process Monitoring

Ionization chambers are typically used for stack, room, hood, glove box, and process monitoring. The outputs can be used to sound alarms, activate ventilation valves, turn on detritiation systems, and for other functions. In general, it can be expected that stack, room, and hood monitors will require little nonelectronic maintenance (i.e., chamber replacement due to contamination) because under routine circumstances, the chambers are constantly flushed with clean air and are not exposed to high tritium concentrations for extended periods of time. Glove box monitors, however, can be expected to eventually become contaminated, especially if exposed to high concentrations of HTO. Process control monitor backgrounds can also be expected to present problems if a wide range of concentrations (e.g., four to five orders of magnitude) are to be measured.

Mass spectrometers, gas chromatographs, and calorimeters are generally used as workhorse instruments for process monitoring. Because of their relative insensitivities, however, these instruments cannot be used for the detection of tritium much below a few parts per million (curies per cubic meter). For this reason, care must be taken in the interpretation of analytical results and the related health physics concerns. It is not uncommon, for example, to find that samples that show no trace of tritium when analyzed on a mass spectrometer actually contain several curies of tritium.

B.3.5 Surface Monitoring

In general, it is not possible to measure the total tritium contamination on a surface except by destructive techniques. Even a slight penetration by tritium, for example, becomes quickly undetectable because of the weak energy of its beta particles. With open-window probes operated in the Geiger-Mueller or proportional regions, it is possible to measure many of the particles emitted from the surface. However, quantifying that measurement in terms of the total tritium present is difficult because every exposure history is different, and the relative amounts of measurable to immeasurable tritium are consequently different. Such monitoring probes are then routinely used to measure the accessible part of the contaminating tritium. Care must be taken to protect the probe from contamination. When monitoring a slightly contaminated surface after monitoring a highly contaminated one, contamination of the probe can be an immediate problem. Placing a disposable mask over the front face of the probe can reduce but never eliminate this contamination completely, particularly when the tritium is rapidly outgassing from the surface being monitored.

For highly contaminated surfaces (>1 mCi/100 cm^2) it is possible to use a thin sodium iodide crystal or a thin-window GM tube to measure the characteristic and continuous x-rays (bremsstrahlung) emitted from the surface, as a result of the interaction of the beta particle with the surface material. In terms of total surface tritium, such measurements are semiquantitative at best.

B.3.6 Liquid Monitoring

Liquid monitoring is almost universally done by liquid scintillation counting. For liquids other than water, care must be taken that the liquid is compatible with the counting cocktail. Certain chemicals can degrade the cocktail. Others are not miscible and may retain much of the tritium; still others result in a high degree of quenching. In addition, samples that contain peroxide, or that are alkaline, may result in chemiluminescence, which can interfere with the measurement. Such samples should first be neutralized before counting. Chemiluminescence and phosphorescence both decay with time, so that keeping the samples in darkness for a period of hours can usually eliminate the problem. Distillations may be necessary for some samples; use of quenching curves or a special cocktail may be necessary for others.

For rather “hot” samples, as may be the case for vacuum pump oils, bremsstrahlung counting may be useful. This technique may also be useful for active monitoring of “hot” liquids. Active monitoring of liquids may also be done with scintillation flow cells, which are often made of a plastic scintillator material, or of glass tubing filled with anthracene crystals. However, these flow cells are particularly prone to contamination by algae or other foreign material, which can quickly degrade their counting efficiency.

B.4 Instrument Types and Calibration

Instruments used for monitoring tritium in air and on surfaces and for counting tritium samples are discussed in this section. Methods and sources for calibrating such instruments are also discussed. All instruments used for monitoring tritium for health and safety reasons should be calibrated regularly. The calibration frequency is typically 6 months for portable or other instruments receiving hard use, 12 months for fixed instruments, and 12 months or longer for simple instruments such as stack samplers.

B.4.1 Air Monitors

Ionization chambers that are used for air monitoring are described in Section B.3.1. The techniques used to calibrate ion chamber instruments can vary, but traditionally they are calibrated with tritium gas if it is practical to do so. If an instrument (or an instrument system) is calibrated with tritium gas once, then it is generally not necessary to repeat that type of calibration. Thereafter, an electronic calibration from the front end of the electrometer preamplifier (if accessible) made with a calibrated current source (or calibrated resistor and calibrated voltage source) can be used. This is followed by a determination that there is adequate voltage on the chamber, and that the chamber is connected. The latter is verified by use of an external gamma source. Finally, if the chamber is of the flow-through type, proper flow must be verified.

Gas-flow proportional counters are not commonly used for air monitoring in the United States, although there has been some renewed interest in them in recent years. This type of instrument is common in West Germany, where regulations require monitoring at very low levels. Advantages are enhanced sensitivity (approximately 0.01 picocuries per cubic meter) and the

ability to discriminate against background radiation. Disadvantages include (i) increased cost and complexity, (ii) the need for a carrier-counting gas, (iii) low flow rate resulting in slower instrument response, and (iv) limited range (up to approximately 1 mCi/m^3). Gas-flow proportional counters are particularly attractive as stack monitors, where increased sensitivity is desirable, and a slower response time is not a problem.

Liquid and plastic scintillation detectors have been developed in Canada and elsewhere to monitor for HTO in air but apparently are not widely used for this purpose. The liquid scintillation counting technique is expensive because it requires a continuous supply of counting cocktail. The plastic scintillator technique, although not very sensitive, has some advantages with regard to size of the detector, which generally consists of two parallel plates of the plastic scintillator arranged in a flow cell. The scintillator, which is relatively insensitive to penetrating gamma rays, can be easily shielded from outside interference because of its small size. For instruments such as gas-flow proportional counters or scintillation counters, use of tritium gas for routine calibration purposes is probably more justified because of the nature of the detectors. This technique particularly applies to scintillation detectors because other techniques are not as effective in determining if the scintillation detectors are working properly.

B.4.2 Surface Monitors

Section B.3.5 describes count rate instruments equipped with windowless gas-flow proportional probes, thin sodium iodide crystals, or thin-window GM tubes that are used to monitor surfaces. Tritiated polystyrene sources can be used to calibrate survey instruments for surface monitoring. Sources are constructed of thin plastic disks for which the tritium beta emission rate from the surface can be determined and certified. The tritium counting efficiency of gas-flow proportional counters under ideal conditions can approach 50 percent. However, normal conditions (e.g., dirty or porous surfaces) can reduce the counting efficiency to 10 percent or less. More stable sources of nickel-63 can also be used to verify the operation of surface-monitoring instruments. However, determination of the tritium counting efficiency cannot be simulated with nickel-63.

B.4.3 Tritium Sample Counters

There are primarily two types of instruments for analyzing tritium samples for radiation-protection purposes: gas-flow proportional counters and liquid scintillation spectrometers.

Gas-flow proportional counters are commercially available with and without a window over the counting chamber and with and without a sample changer mechanism. Windowless counters should be used for tritium samples to obtain the maximum counting efficiency. When a large number of samples can be counted, a proportional counter with an automatic sample changer is recommended. When a number of samples need to be counted quickly, several proportional counters with single-sample capacity may be used to obtain prompt results.

Tritiated polystyrene sources can be used to calibrate proportional counters for analysis of tritium samples. The tritium counting efficiency for 2π proportional counters can approach 50 percent under ideal conditions. However, when dirty smear papers or thick porous samples are counted, the counting efficiency may be reduced to 10 percent or less. More stable nickel-63 sources can also be used to verify the operation of proportional counters.

Detection with liquid scintillation counters has become established as the most convenient and practical way of measuring tritium in the liquid phase. Liquid scintillation counters are

commercially available, many with capabilities for handling several hundred samples. The technique consists of dissolving or dispersing the tritiated compound in a liquid scintillator, subsequently detecting the light emitted from the scintillator, and counting the number of emissions. Major efforts in developing the technique have been directed to improving the detection efficiency of the photo-multipliers, distinguishing the tritium scintillation events from others, and in finding scintillator/solvent mixtures that can accommodate large volumes of sample (especially aqueous samples) without the degradation of the scintillation properties.

Liquid scintillation counters should be calibrated regularly by means of National Institute of Standards and Technology (NIST)-traceable standards. Quenching standards, often supplied by the manufacturer, may be used to establish the counting efficiency for tritium as a function of quenching ratio. The quenching ratio, and hence the counting efficiency, for individual samples can be determined routinely. The tritium counting efficiency for unquenched samples is usually about 35 percent to 50 percent.

B.5 Contamination Control and Protective Measures

Contamination control can be an effective method of limiting uptake of tritium by workers. In this section, smear surveys and off-gassing measurements are described as the primary methods of monitoring the effectiveness of contamination control. For situations where tritium contamination cannot be prevented, a number of protective measures are described that provide engineering controls over the spread of tritium contamination. Respiratory protection, gloves, and other protective clothing for working in tritium-contaminated environments are also described in this section.

B.5.1 Methods of Contamination Control

Any material exposed to tritium or a tritiated compound has the potential of being contaminated. Although it is difficult to quantify tritium contamination levels, there are several methods available to evaluate the existence and relative extent of contamination, including smear surveys and off-gassing measurements. Good housekeeping and work practices are essential in maintaining contamination at acceptable levels within a tritium facility.

The total amount of tritium surface contamination is not an indication of its health or safety implications. Rather, the loose, removable tritium is a more important indicator; this is the tritium that can be transferred to the body by skin contact, or that may outgas and become airborne. Loose contamination is routinely monitored by smears (or swipes), which are wiped over a surface and then analyzed for tritium content by liquid scintillation or proportional counting.

B.5.1.1 Smear Surveys

Surface monitoring by smear counting is an important part of the monitoring program at a tritium facility. It is used to control contamination, to minimize uptake by personnel, and to prevent, or minimize, its spread to less contaminated areas. A routine surface contamination-monitoring program is required, and additional special monitoring should be provided when the condition or situation is warranted.

An effective tritium health physics program must also specify the frequency of routine smear surveys. Based on operating experience and potential contamination, each facility should develop a routine surveillance program that includes daily smear surveys in areas such as

lunchrooms, step-off pads, and change rooms. In other locations within a facility, it may be sufficient to perform weekly or monthly routine smear surveys. In addition to the routine survey program, special surveys should be made on material being moved from one level of control to a lesser-controlled area. This will help prevent the spread of contamination from controlled areas.

Smears are typically small round filter papers used dry or wet (with water, glycol, or glycerol). Wet smears are more efficient in removing tritium and the results are more reproducible, although the papers are usually more fragile when wet. However, tritium smear results are only semiquantitative, and reproducibility within a factor of 2 agreement (for wet or dry smears) is considered satisfactory. Ordinarily, an area of 100 square centimeters of the surface is wiped with the smear paper and quickly placed in a liquid scintillation counting vial with about 10 ml of cocktail, or 1 or 2 ml of water with the cocktail added later. It is important to place the swipe paper in liquid quickly after swiping because losses by evaporation can be considerable, especially if the paper is dry. The counting efficiency is not much affected by the presence of a small swipe.

Foam smears are also commercially available. These dissolve in most cocktails and do not significantly interfere with the normal counting efficiency. Alternatively, the smear paper may be counted by gas-flow proportional counting but, because of the inherent counting delays, tritium losses prior to counting can be significant.

Moreover, counting efficiencies may be difficult to determine and can be expected to vary greatly from one sample to the next. Another drawback is potential contamination of the counting chamber when counting very “hot” smears. For all of these reasons, liquid scintillation counting is the preferred smear-counting system.

B.5.1.1.1 Allowable Tritium Surface Contamination Levels—Background

In the traditional sense, the NRC has not had to deal with tritium contamination, and/or with allowable tritium surface-contamination levels, as these historically have come under the purview of DOE and its predecessor agencies (i.e., the Energy Research and Development Agency (ERDA) and, prior to ERDA, the AEC). It is interesting to note, however, that the subject of allowable tritium surface-contamination levels had fallen through the regulatory cracks for years, because, in spite of the existing ICRP dose models for allowable surface contamination limits for most other radionuclides, the ICRP models contained a disclaimer: “These data are not applicable to pure beta-emitters with a maximum energy equal to, or less than, 150 keV.” As a consequence, allowable surface contamination limits for tritium, and carbon-14, simply did not exist.

Some of that began to change in 1977, when the ICRP published its latest recommendations for the safe handling of radioisotopes in hospitals and medical establishments (ICRP, 1977). In their publication of ICRP-25, the ICRP was suggesting a general purpose working limit of 1 nCi/cm^2 for allowable radionuclide contamination on surfaces. For tritium and carbon-14, however, ICRP-25 specifically noted that the 1 *n*Ci/cm^2 recommendation could be increased by a factor of 100. Using the appropriate scaling factors, the ICRP-25 recommendations, therefore, were suggesting that the maximum limit for tritium and carbon-14 contamination control levels for controlled area usage should be on the order of 10 µCi/100 cm^2, or 2.22×10^7 dpm/100 cm^2.

In one of the earliest attempts to address the problem for unrestricted use, the State of California, as an Agreement State, adopted an interim set of tritium and carbon-14 surface contamination limits in 1977 (Honey, 1977), based on the existing guidance provided in the AEC's Regulatory Guide 1.86 (AEC, 1974) (this guidance has since been replaced through the License Termination Rule). For the most part, the limits went unquestioned, and, over the years, the same set of limits was adopted by DOE's San Francisco Operations Office (DOE, 1987). Thus, for DOE, the allowable surface contamination limits for removable tritium were set at 10,000 dpm/100 cm^2.

Everything went reasonably well until 1989, when DOE published its final version of DOE Order 5480.11 (DOE, 1988). Like the AEC had done with its table of "Acceptable Surface Contamination Levels" in Regulatory Guide 1.86, DOE had also published a comparable table of surface radioactivity guides, in a simplified format, in DOE Order 5480.11.

However, it is important to note with respect to the DOE's first version of the Order that DOE did not include a separate category for tritium (or carbon-14). As a consequence, the DOE tritium community found that its regulatory limits for allowable surface contamination limits had been unexpectedly, and arbitrarily, reduced by an order of magnitude. (Tritium was now considered as falling into a generic category, along with β-y emitters and nuclides with decay modes other than alpha-emission or spontaneous fission.)

When the tritium community objected *en masse,* on both a national and international basis, DOE established the Tritium Surface Contamination Limits Committee to look into and correct the problem. Although the Tritium Surface Contamination Limits Committee came back with recommendations that were more on the order of 100,000 dpm/100 cm^2 for removable tritium surface contamination, DOE elected to adopt a more conservative limit of 10,000 dpm/100 cm^2 (Surface Contamination Limits Committee (1991) and 10 CFR Part 835, "Occupational Radiation Protection," respectively.) It is particularly important to note, however, that, while DOE has used the value of 10,000 dpm/100 cm^2 for the free release of tritium-contaminated items from controlled areas, the surface contamination limits used by DOE are intended primarily for use in occupational exposure situations, and *not* for the free release of tritium-contaminated items to uncontrolled areas.

B.5.1.1.2 Allowable Tritium Surface Contamination Levels—Facility Issues

Because they have not had to deal with the issue in the past, there is no obvious reason to expect the NRC to have any current limits in place to establish action levels operating facilities should use (e.g., nuclear reactors) for tritium surface contamination limits for occupational exposures, nor should it be expected to have limits in place to address the subject of the free release of tritium-contaminated items to uncontrolled areas. As a starting point, therefore, the adoption of the original recommendations of the Tritium Surface Contamination Limits Committee (i.e., 100,000 dpm/100 cm^2 for operational limits in controlled areas and 10,000 dpm/100 cm^2 for the free release of tritium-contaminated items to uncontrolled areas) would be appropriate. From an operational standpoint, experience has shown that both values can be used without placing undue administrative burdens on the staff. More importantly, from a health and safety standpoint, the information contained in the Committee's report (Surface Contamination Limits Committee, 1991) has shown that both values are extremely conservative, for both the workers and the general public.

B.5.1.1.3 Allowable Tritium Surface Contamination Levels—Transportation Issues

Although the U.S. Department of Transportation has no specific limits in place to address allowable *tritium* surface contamination, the requirements in 49 CFR 173.443(a) do address allowable surface contamination limits on the external surfaces of *all* radioactive material transportation packages. The basic limit specified for all radionuclides is that the allowable surface contamination limits, for nonfixed (removable) contamination, must be kept as low as reasonably achievable (ALARA). The limits further specify that the allowable surface-contamination limits, for nonfixed (removable) contamination, for β-y emitters, is 4 becquerels per square centimeter, 1×10^{-4} microcuries per square centimeter, or 220 dpm/cm^2, all of which translate, in more conventional units, to 22,000 dpm/100 cm^2. Given the background information noted above in Section B.5.1.1.1, such a value is well in keeping with tritium operations issues and expectations.

The allowable surface contamination limits on the internal surfaces of transportation packages are addressed in 49 CFR 173.428(d), which states that, for an *empty* package, the internal surface contamination levels must not exceed 100 times the limits specified in 49 CFR 173.443(a), or 2.2×10^6 DPM/100 cm^2. For the shipment of irradiated TPBARs, such a value becomes problematic in that once a package has been used for the shipment of irradiated TPBARs, it can probably never again be shipped as an *empty* package.

B.5.1.2 Out-Gassing Measurements

Basic out-gassing measurements can be made using any of several different methods. The most reliable methods, however, involve the use of a closed-loop system of known volume, and a flow-through ionization chamber monitor. By placing the material inside the volume and by measuring the change in concentration over a period of time, accurate determinations of tritium off-gassing rates can be made on virtually any material. The initial out-gassing rate measured is the required value, since the equilibrium concentration may be quickly reached in a closed volume, especially if the volume is small. Relative health hazards can be determined in absolute terms and, where appropriate, decisions can be made regarding the release of such materials to uncontrolled areas.

B.5.2 Protection Against Airborne Contaminants

Several important engineering controls are available for tritium protection. For the protection of personnel against potential inhalation hazards from tritium, the most commonly used methods include differential pressure zoning, dilution ventilation, and local exhaust ventilation techniques. Depending on the relative hazard, however, additional measures must be considered. In order of increasing protection factors, these might include but are not limited to air-supplied respirators (self-contained breathing apparatus), air-supplied suits, and glove boxes.

B.5.2.1 Differential Room Pressure Zones

Differential room pressure zones are used in virtually all tritium facilities. In general, this technique establishes a natural flow path that leads from less to more hazardous areas. Used in conjunction with dilution ventilation and local exhaust ventilation techniques (see Sections B.5.2.2 and B.5.2.4, below), differential zoning is an important line of defense against the migration of tritium into areas where it is not wanted.

Typical pressure zoning controls should be arranged as follows:

- Using outside air pressure as the reference, office areas and other uncontrolled areas will generally be held between zero (0.00) differential and -0.01 inch of water column.
- Main access corridors outside of the radioactive materials area (RMA) will generally be held between -0.01 inch and -0.025 inch; main access corridors inside the RMA will generally be held between -0.01 inch and -0.05 inch.
- Individual rooms within the RMA will generally be held between -0.1 and -0.15 inch.
- Working arrangements for glove boxes will typically range from -0.25 inch to -1.0 inch, depending on the comfort level of the operators.

In special cases, the pressure differentials may differ from those in the above example.

B.5.2.2 Dilution Ventilation

Dilution ventilation is the once-through flow technique of exchanging outside air for inside air for purposes of comfort and basic contamination control. For comfort control, this technique typically uses cooled air in the summer and warm air in the winter. However, dilution ventilation techniques are inherently inefficient for saving on energy. For contamination control purposes, dilution ventilation techniques are made even more inefficient because large quantities of air are occasionally required for the adequate dilution of room air releases in relatively short time frames.

B.5.2.3 Room Air Exchange

Room air exchange rates in most working environments are typically set to about four air changes per hour. At most tritium facilities, however, exchange rates are routinely set to 10 air changes per hour in RMAs and four to six air changes per hour in offices and other noncontrolled areas. Thus, depending on the size of the facility, it can be expected that the total air throughput for any given tritium facility will be approximately 10^6 to 10^8 cubic meters per day, or higher. Because of increased energy costs in recent years, studies have been conducted at a number of sites in which the feasibility of retrofitting air-handling systems with computerized flow control systems has been examined. The newer systems would automatically cut back on airflow rates during nonpeak periods, and/or when facilities are unoccupied. Although few systems have actually been installed and tested, the impact of such systems should be such that health physics programs will not be affected.

It is important for health physicists to know room air exchange rates to determine waiting times before re-entering a room after tritium releases. Assuming that air change rates are 10 volume changes per hour, the formula shown in Equation B.6 may be used to determine room tritium activity:

$$\text{Final Value} = \text{Initial Value} \times e^{-10t} \qquad \text{(B.6)}$$

where *t is* the total time in hours after the release. The initial value of tritium air activity is assumed to have reached equilibrium.

B.5.2.4 Local Exhaust Ventilation

The primary advantages of local exhaust ventilation techniques, effective in tritium facilities, relate to the complete capture of the contaminant, regardless of its evolution rate, relative toxicity, or physical state. In addition, these techniques use relatively low air volumes compared to dilution ventilation. Potential disadvantages of local exhaust ventilation techniques are their relatively complex system design and that, once most systems are installed, they cannot easily be moved to other locations.

B.5.2.4.1 Fume Hoods

Fume hoods are often used in local exhaust ventilation systems. In theory, linear flow established at or near hood openings (face velocities) captures the contaminants and draws them through the hood and into the connecting ductwork. The capture of gases and vapors will generally require lower face velocities than those needed for the capture of particulates. Large and intermediate-sized particles, for example, will sometimes be difficult to capture because of their inherent mass and the forces of gravity. Smaller particles, on the other hand, (below a few microns in size), can be expected to behave in a manner similar to that for gases and vapors.

For tritium work in a fume hood, face velocities in the range of 100 to 150 linear feet per minute (lfpm) are used. Higher velocities (e.g., 150 to 200 lfpm) can produce turbulent flow, resulting in eddy currents that can sweep tritium back to the operator. Since the problem can be further compounded by the location of equipment within the hood, operations involving the use of fume hoods should be periodically reviewed to ensure that adequate protection is being provided.

B.5.2.4.2 Canopy Hoods

Canopy hoods are used in place of fume hoods for housing large equipment. Designed for specific applications, canopy hoods are used at many tritium facilities for the following reasons: (i) to enclose glove box pass-through-port operations, (ii) to house many experiments that are too large to fit into a fume hood, and (iii) in some applications, to house tritium gas-pumping systems.

Canopy hoods, although used with either natural- or forced-air exhaust, are most effective for hot- and warm-air processes where rising thermal currents help pull air into the hood. For tritium work, canopy hoods are usually designed such that heat-producing equipment (e.g., pumps) can be placed at floor level. Hood door openings, which usually slide to the right and to the left, must be designed so that they can function without interfering with the worker or the operation. However, because the protection afforded by canopy hoods can quickly be lost when cross drafts are introduced, hood openings must be kept to a practical minimum whenever the hood is in use.

B.5.2.4.3 Recovery/Cleanup Systems

It is common in many facilities with glove box operations to clean up the air and remove or recover the tritium from the air prior to exhausting to the atmosphere. Various stripper systems and recovery units are used for this purpose. Since environmental concerns are increasing, it is important to maintain environmental releases ALARA.

B.5.2.5 Respirators

In general, respirators that are effective for tritium fall into two categories: air-purifying respirators and air-supplied respirators. Air-purifying respirators usually contain chemical cartridges, special filters, or both, which remove contaminants from air prior to breathing. Air-supplied respirators are of two types: (i) the self-contained type, for which a cylinder of air (or oxygen) or an oxygen-generating chemical provides the necessary oxygen for breathing, or (ii) the hose type, for which air is supplied from an external source. Although ANSI Z88.2 (ANSI, 2015) describes in detail the types of respiratory protection devices that are appropriate for various types of chemical and radiological hazards, the primary use of respirators in a tritium facility is to provide protection against the possible inhalation of HTO. To be effective against HTO, however, respirators must be of the type to remove HTO from air, exchange it for normal water vapor, or be supplied with an external source of clean air.

B.5.2.6 Air-Supplied Suits

Because of the inherent disadvantages normally associated with respirators and other breathing apparatus, air-supplied plastic suits that completely enclose the body are widely used by facilities that process tritium. Prior to using air-supplied suits at DOE facilities, however, the suits must be tested and approved by a DOE Respirator Advisory Committee (RAC) (Bradley, 1984).

The main objectives of air-supplied suits are to (i) provide a layer of circulating air between the worker and the suit, (ii) provide an adequate supply of breathing air for the worker, and (iii) maintain an adequate flow of air from the interior of the suit to the exterior to help keep the body cool. The incoming air must meet the criteria of Type 1, Grade D, breathing air, as specified in the Compressed Gas Association standard for compressed air for human respiration (Compressed Gas Association 2014). The air-supply system should be designed to ensure a high degree of reliability.

Capacity requirements for air-supply systems will be dependent on flow requirements for specific suit designs. There are a wide range of flow rates used in RAC-approved suits (from 6 to 20 cubic feet per minute per suit), and it is not uncommon to have several workers on a manifold system at the same time. Therefore, system capacities should be designed to provide adequate flow to each suit user. Capacities in excess of several hundred cubic feet per minute may be needed per system.

For tritium work, air-supplied suits must be constructed of materials that have acceptable permeation protection against HTO. They must also provide appreciable tear and abrasion resistance. Because they are intended for use in many different environments, suits must be designed to provide adequate vision, to minimize interference with normal work movements, and to be put on and taken off easily. Noise levels in suits resulting from the flow of incoming air must be maintained at levels less than Occupational Safety and Health Administration workplace standards, and they must comply with RAC criteria. Because of the closed environment, and because of the additional background noise caused by the flow of air into the suits, communication methods between personnel may require special equipment.

B.5.2.7 Temporary Enclosures

A more effective way to contain tritium may be to construct a tent (temporary canopy hood or a temporary glove box). The primary difference between the two is that hoods generally exhaust

to the stack and glove boxes generally exhaust to cleanup systems. For tritium, tents can be thought of as being the nominal equivalent of a reactor-type contamination control point when large pieces of equipment or entire areas must be worked on.

Structural members for tents can literally be anything. Smaller glove-bag operations, for example, recommend the use of Tinker-Toys® for support. For larger operations, polyvinyl chloride (PVC) pipe, scaffolding supports, and standard off-the-shelf fittings can be used, along with anything else that is available. Tent walls are usually made of 3-, 6-, or 12-mil fire-retardant PVC plastic sheeting, depending on strength requirements that may develop because of the facility's differential pressures.

Tenting operations are usually designed to allow personnel to work inside. In most cases, personnel working inside will wear air-supplied plastic suits. For these reasons, communication links between personnel inside and outside become vital. Moreover, because many tenting operations involve the use of welding, brazing, grinding, and/or other hot processes, additional emphasis must be placed on possible fire hazards.

B.5.3 Protection Against Non-Airborne Contaminants

The personnel protective equipment worn by workers is one of the most important aspects of an effective health physics program. Since tritium can be easily absorbed through the skin or through inhalation, personnel protective equipment must protect against both exposure routes. The following describes protective measures and equipment that may be used for skin-absorption pathways.

B.5.3.1 Gloves, General

In some operations, the hands and forearms of workers can be exposed to high tritium concentrations in many forms, and the proper selection of gloves and glove materials is essential.

Many factors should be considered in selecting the proper type of glove. Factors to be considered in making the selection include chemical compatibility, permeation resistance, abrasion resistance, solvent resistance, glove thickness, glove toughness, glove color, shelf life, and unit cost. Gloves are commercially available in materials such as butyl rubber, natural rubber, neoprene rubber, neoprene and natural rubber blends, nitrile (Buna-N®), and PVC plastics, polyvinyl alcohol (PVA) coated fabrics, and Viton®.

Table B-2 shows the chemical compatibility of eight of the available glove materials, along with recommended and nonrecommended uses. The data clearly indicate that certain types of materials are not recommended for use with certain types of chemicals. Different types of gloves should be readily available for use in routine handling of chemicals.

Table B-3 lists some of the physical properties of commercially available gloves that can be found in common use at most facilities. Listed in order of their cost, prices can be expected to range from well under $1 per pair for the thinnest (0.005 inch thickness) PVC gloves to more than $30 per pair for Viton® (0.012 inch thickness).[4] Also included in Table B-3 are additional

[4] Price estimates listed are in 1980 dollar estimates.

Table B-2 Chemical Compatibility of Available Liquid-Proof Gloves

Material	Recommended for:	Not recommended for:
Butyl	Dilute acids and alkalies, ketonic solvents, gas and vapor permeation protection	Petroleum oils, distillates, and solvents
Natural rubber	Ketonic solvents, alcohols, photographic solutions	Petroleum oils, distillates, and solvents
Neoprene	Concentrated nonoxidizing acids and concentrated alkalies	Halogenated or ketonic solvents
Neoprene/natural blends	Dilute acids and alkalies, detergents, and photographic solutions	Halogenated or rubber ketonic solvents
Nitrile	Petroleum-based solvents, distillates, and oils	Halogenated or ketonic solvents
PVC	General purpose, low-risk hand protection	Halogenated or ketonic solvents
PVA	Halogenated solvents, paint shop applications	Water or water-based solutions
Viton®	Halogenated solvents, concentrated oxidizing acids	Aldehydes, ketonic solvents

Table B-3 Physical Properties of Commercially Available Gloves

Glove material	Length (in.)	Thickness (in.)	Shelf life	Relative toughness	HTO permeation
PVC	11	0.005	Fair	Fair	Poor
PVC	11	0.010	Good	Good	Fair
PVC	11	0.020	Excellent	Excellent	Good
Neoprene/natural rubber blend	14	0.020	Good	Good	Good
Neoprene	11	0.015	Excellent	Good	Good
Neoprene	18	0.022	Excellent	Good	Good
Natural rubber	11	0.015	Poor	Fair	Good
Nitrile	13	0.015	Excellent	Excellent	Good
Nitrile	18	0.022	Excellent	Excellent	Good
Butyl	11	0.012	Excellent	Poor	Excellent
PVA [a]	12	0.022	Good	Excellent	Poor
Viton®	11	0.012	Excellent	Excellent	Excellent

[a] As a coated, flock-lined fabric, the thickness of PVA gloves can vary by as much as ±20 percent. Because the PVA coating is water soluble, other properties of PVA gloves can also be expected to vary, depending on their long-term exposure to moisture.

considerations for glove length, as well as comparisons of shelf life, glove toughness, and HTO permeation characteristics. The rating system for the data in Table B-3 is as follows. Under

“Shelf life,” “Excellent” refers to an indefinite time span with no obvious loss of properties; “Poor” refers to a time span of between 6 and 12 months, the loss of basic properties being obvious; “Fair” and “Good” refer to arbitrary time spans of 2 and 4 years, respectively, with some loss of properties becoming evident over time. “Relative toughness” is a combined heading based on inherent glove properties reinforced by thickness where appropriate. The data suggest, for example, that the overall rating for nitrile gloves should not change appreciably with increasing thickness because toughness is a property inherent in the glove. For PVC gloves, however, the ratings do change with thickness because the relative toughness of PVC gloves is primarily a function of the cross-sectional area of the glove-body wall. The ratings for protection against HTO permeation are listed relative to butyl and Viton® gloves, both of which are rated as “Excellent.” For all these ratings, it is assumed that the gloves will be discarded before steady-state permeation of HTO (HTO breakthrough) can occur. In all cases, these ratings are dependent on the total thickness of the glove (i.e., the cross-sectional area of the glove-body wall).

Additional gloves that might be considered are polyethylene gloves (11 × 0.00175 inches) and surgeon’s gloves (11 × 0.006 inches). Other properties that might be considered include the availability of powdered versus nonpowdered gloves. The former are important when dexterity is needed; the latter are better suited for high-vacuum and ultra-high-vacuum work.

The use of two or more glove layers should be considered for complex chemical operations, such as waste treatment and handling, and also for maintenance operations that might include the potential for exposure to a wide variety of chemical compounds, such as plumbing replacement operations on large-scale vacuum effluent capture systems that have been in tritium service for several years. Although basic protection schemes can be determined for most combinations of chemical species, the best gloves are composed of three layers of liquid-proof gloves and an underlying layer of absorbent glove material (i.e., a cotton glove liner). Different-colored layers for indicating which layers fail to meet protection requirements should also be considered. This further means of protection would prove beneficial for most workers, except for the small percentage of workers who are colorblind.

B.5.3.2 Lab Coats and Coveralls

Lab coats and coveralls (fabric barriers) are worn at various times in almost all tritium facilities. Lab coats are normally worn for the general protection of street clothes as part of the daily routine. For added protection, coveralls are sometimes worn instead of a lab coat when the work is unusually dusty, dirty, or greasy. However, in most cases, the protection afforded by lab coats and coveralls is little more than cosmetic.

Unless they are treated with water-resistant or waterproofing agents, open-weave fabrics, such as those normally associated with lab coats and coveralls, provide minimal barriers against the airborne diffusion of HTO. Moreover, it can be expected that the HTO protection that is afforded will be the result of straightforward mechanical factors: some of the HTO will become absorbed in the weave of the fabric, some will be trapped in air pockets between layers of fabrics, and some will be trapped in air pockets that separate the fabric layers from the skin. Perspiration levels near the skin surface, both sensible and insensible, can be expected to add an additional short-term dilution factor. For the most part, however, it can be expected that, unless lab coats and/or coveralls are changed often, approximately every 10 minutes or so, diffusion and dilution effects will quickly reach equilibrium in high HTO concentration operations, and all barrier effects will be nullified.

Waterproof and water-resistant lab coats and coveralls have been tested at various laboratories. In most cases, however, they are not recommended for everyday use because of the excessive heat loads inflicted on the worker. Many facilities prefer the use of open-weave fabrics for lab coats and coveralls and the use of an approved laundry for contaminated clothing. Other facilities have opted instead to use disposable paper lab coats and coveralls, exchanging the costs associated with a laundry for the costs associated with replacement and waste disposal.

B.5.3.3 Shoe Covers

Although shoe covers can provide protection factors that range over several orders of magnitude, the routine use of shoe covers in a tritium facility must be thoroughly weighed against actual need. Like lab coats and coveralls, shoe covers offer little protection against spreadable particulates and/or gases and vapors. As a general rule, shoe covers are not recommended for the control of spreadable contamination, except in highly contaminated areas, because good housekeeping (i.e., regular dusting, washing, and waxing of floors) provides better control over contamination spread. For localized contamination problems, such as those that might result from spills of tritium-contaminated liquids and solids, the use of liquid-proof shoe covers should be considered to prevent the spread of contamination.

B.6 Decontamination

Methods available for decontaminating materials are based on material composition and the extent of tritium contamination. Effective decontaminating agents include soap and water, detergents, bleach, alcohol, and Freon™. Since decontamination is often difficult, especially where surfaces are exposed to high concentrations of tritium for extended periods, tools and specialized equipment routinely used in process areas should be stored there for reuse.

Action levels should be established for the different tritium facility control zones to ensure that tritium contamination levels do not build up over time. For example, smearable limits for uncontrolled material release and clean areas at different facilities may range from 1,000 to 10,000 dpm/100 cm^2. Smearable limits in controlled zones may be much higher, but an effective health physics program should have procedural limits on the amount of smearable contamination permitted. When these action levels are exceeded, timely decontamination efforts should be initiated.

In spite of all the precautions normally taken, there may be occasional tritium contamination of workers. Effective personal decontamination methods include rinsing of the affected part of the body with cool water and soap. If the entire body is affected, a shower should be taken using soap and water as cool as can be tolerated. This will help keep the skin pores from opening, thus minimizing skin absorption.

B.7 Maintenance

Maintenance activities and operations sometimes require work to be done on equipment outside of a hood or glovebox environment. Several techniques are available for this type of operation, such as close-capture methods and contaminant huts or tents. Taking advantage of localized crosscurrents, “snorkels” and “elephant trunks” used as flexible exhaust lines can be placed directly over or adjacent to the work to be performed. Face velocities of several thousand lfpm can be generated to aid in keeping off-gassing tritium away from the workers. (See Section B.5.2, above).

B.8 References

10 CFR Part 835, “Occupational Radiation Protection”, Appendix D, “Surface Contamination Values.”

American National Standards Institute, “American National Standard for Respiratory Protection,” ANSI Z88.2, 2015.

Bradley, O.D., “Acceptance-Testing Procedures for Air-Line Supplied Suits,” LA-10156, Los Alamos National Laboratory, 1984.

Compressed Gas Association, “Compressed Air for Human Respiration,” CGA-G7.1, New York, NY, 2014.

Honey, D.D., “State of California Inspection Policy Memorandum #8, Revised Guidelines for Decontamination of Facilities and Equipment Prior to Release for Unrestricted Use,” June 30,1977.

International Commission on Radiological Protection, *The Handling, Storage, Use and Disposal of Unsealed Radionuclides in Hospitals and Medical Research Establishments*, ICRP Publication 25, Ann. ICRP 1 (2), Pergamon Press, Oxford, 1977. See, in particular, Section 9, paragraphs 175–177, pp. 27–28.

ICRP, *Limits for Intakes of Radionuclides by Workers*, ICRP Publication 30 (Part I and Supplements), Ann. ICRP 2 (3-4), Pergamon Press, New York, NY, 1979.

National Council on Radiation Protection and Measurements, “Tritium Measurement Techniques,” NCRP Report No. 47, Washington, DC, 1976.

Surface Contamination Limits Committee Report, “Recommended Tritium Surface Contamination Release Guides,” February 1991.

U.S. Atomic Energy Commission, Tritium Control Technology, edited by T.B. Rhinehammer and P.H. Lamberger, Monsanto Research Corporation Report, WASH-1269, Miamisburg, OH, 1973.

U.S. Atomic Energy Commission, “Termination of Operating Licenses for Nuclear Reactors,” Regulatory Guide 1.86, June 1974.

U.S. Department of Energy, San Francisco Operations Office, “Requirements for Radiation Protection,” Management Directive SAN MD 5480.IA, CH. XI, Section 8, paragraph (g), Attachment I, June 15, 1987.

U.S. Department of Energy, “Radiation Protection for Occupational Workers,” DOE Order 5480.11, December 21, 1988.

U.S. Department of Energy, “Health Physics Manual of Good Practices for Tritium Facilities,” MLM-3719, December 1991.

B.9 Suggested Additional Reading

Peterson, S-R., and P.A. Davis, “Tritium Doses from Chronic Atmospheric Releases: A New Approach Proposed for Regulatory Compliance,” *Health Physics,* 82(2): pp. 213–225, 2002.

U.S. Department of Energy, “Primer on Tritium Safe Handling Practices,” DOE-HDBK-1079-94, December 1994.

U.S. Department of Energy, “Radiological Training for Tritium Facilities,” DOE-HDBK-1105–2002 Chg Notice 2, May 2007.

U.S. Department of Energy, “Tritium Handling and Safe Storage,” DOE-HDBK-1129–2015, September 2015.

U.S. Environmental Protection Agency, “Federal Guidance Report No. 13: CD Supplement,” EPA 402-C-99-001, Rev. 1, Oak Ridge National Laboratory, Oak Ridge, TN, 2002.

NRC FORM 335
(12-2010)
NRCMD 3.7

U.S. NUCLEAR REGULATORY COMMISSION

BIBLIOGRAPHIC DATA SHEET

(See instructions on the reverse)

1. REPORT NUMBER
(Assigned by NRC, Add Vol., Supp., Rev., and Addendum Numbers, if any.)

NUREG-2216

2. TITLE AND SUBTITLE

Standard Review Plan for Transportation Packages for Spent Fuel and Radioactive Material

Final Report

3. DATE REPORT PUBLISHED

MONTH	YEAR
August	**2020**

4. FIN OR GRANT NUMBER

5. AUTHOR(S)

Jeremy Smith, Michel Call, Bernard White, Darrell Dunn, Jorge Solis, Jeremy Tapp, Antonio Rigato, Joseph Borosky

6. TYPE OF REPORT

Technical

7. PERIOD COVERED (Inclusive Dates)

8. PERFORMING ORGANIZATION - NAME AND ADDRESS (If NRC, provide Division, Office or Region, U. S. Nuclear Regulatory Commission, and mailing address; if contractor, provide name and mailing address.)

Office of Nuclear Material Safety and Safeguards
U.S. Nuclear Regulatory Commission
Washington, D.C. 20555-0001

9. SPONSORING ORGANIZATION - NAME AND ADDRESS (If NRC, type "Same as above", if contractor, provide NRC Division, Office or Region, U. S. Nuclear Regulatory Commission, and mailing address.)

Same as above

10. SUPPLEMENTARY NOTES

11. ABSTRACT (200 words or less)

This standard review plan (SRP) provides guidance to the U.S. Nuclear Regulatory Commission (NRC) staff for reviewing an application for package approval issued under Title 10 of the *Code of Federal Regulations* (10 CFR), Part 71, "Packaging and Transportation of Radioactive Material." NRC approval of a package design typically results in issuance of a certificate of compliance (CoC) or a letter amendment for a transportation package. The objectives of this SRP are to assist the NRC staff in its reviews by:

- providing a basis that promotes uniform quality and a consistent regulatory review of an application for a CoC for a transportation package
- presenting a basis for the review's scope
- identifying acceptable approaches to meeting regulatory requirements
- suggesting possible evaluation findings that can be used in the safety evaluation report

This SRP may be revised and updated as the need arises on a chapter-by-chapter basis to clarify the content, correct errors, or incorporate modifications approved by the Director of the NRC Division of Spent Fuel Management. Comments, suggestions for improvement, and notices of errors or omissions should be sent to and will be considered by the Director, Division of Spent Fuel Management, Office of Nuclear Material Safety and Safeguards, U.S. Nuclear Regulatory Commission, Washington, DC 20555-0001.

12. KEY WORDS/DESCRIPTORS (List words or phrases that will assist researchers in locating the report.)

standard review plan
spent nuclear fuel
spent fuel, transportation
transportation packages
radioactive material transportation
10 CFR 71
Part 71

13. AVAILABILITY STATEMENT

unlimited

14. SECURITY CLASSIFICATION

(This Page)

unclassified

(This Report)

unclassified

15. NUMBER OF PAGES

16. PRICE

Printed
on recycled
paper

Federal Recycling Program

UNITED STATES
NUCLEAR REGULATORY COMMISSION
WASHINGTON, DC 20555-0001

OFFICIAL BUSINESS

@NRCgov

NUREG-2216 Standard Review Plan for Transportation Packages for Spent Fuel and Radioactive Material August 2020