U.S. Department of Transportation

Pipeline and Hazardous Materials Safety Administration

East Building, PHH-23
1200 New Jersey Ave, SE
Washington, D.C. 20590

COMPETENT AUTHORITY CERTIFICATION FOR A TYPE FISSILE RADIOACTIVE MATERIALS PACKAGE DESIGN CERTIFICATE USA/0829/AF-96, REVISION 1

REVALIDATION OF FRENCH COMPETENT AUTHORITY CERTIFICATE F/420/AF

The Competent Authority of the United States certifies that the radioactive material package design described in this certificate satisfies the regulatory requirements for a Type AF package as prescribed in the regulations of the International Atomic Energy Agency[1] and the United States of America[2].

1. Package Identification - DN30.

2. Package Description and Authorized Radioactive Contents - as described in French Certificate of Competent Authority F/420/AF, Revision Ab (attached). Contents are restricted to natural uranium, enriched commercial grade uranium, or slightly contaminated uranium with trace quantities limits, as specified in the French certificate.

3. Criticality - The minimum criticality safety index is 0.0. The maximum number of packages per conveyance is determined in accordance with Table 11 of the IAEA regulations cited in this certificate.

4. General Conditions -

   a. Each user of this certificate must have in his possession a copy of this certificate and all documents necessary to properly prepare the package for transportation. The user shall prepare the package for shipment in accordance with the documentation and applicable regulations.

   b. Each user of this certificate, other than the original petitioner, shall register his identity in writing to the Office

[1] "Regulations for the Safe Transport of Radioactive Material, 2012 Edition, No. SSR-6" published by the International Atomic Energy Agency (IAEA), Vienna, Austria.

[2] Title 49, Code of Federal Regulations, Parts 100-199, United States of America.

of Engineering and Research, (PHH-23), Pipeline and Hazardous Materials Safety Administration, U.S. Department of Transportation, Washington D.C. 20590-0001.

c. This certificate does not relieve any consignor or carrier from compliance with any requirement of the Government of any country through or into which the package is to be transported.

d. Records of Management System activities required by Paragraph 306 of the IAEA regulations[1] shall be maintained and made available to the authorized officials for at least three years after the last shipment authorized by this certificate. Consignors in the United States exporting shipments under this certificate shall satisfy the applicable requirements of Subpart H of 10 CFR 71.

5. Special Conditions -

a. Cylinders used under this certificate must have been designed and manufactured in compliance with the ANSI N14.1 standard in effect at the time of manufacture.

b. Cylinders used under this certificate must be operated, maintained and handled in accordance with the ANSI N14.1 standard in effect at the time of shipment.

c. Contents that do not satisfy the definition of fissile material or that satisfy one of the fissile exceptions found in the IAEA regulations cited by this certificate may be transported as RADIOACTIVE MATERIAL, URANIUM HEXAFLUORIDE non-fissile or fissile-excepted (UN 2978) under the provisions of this certificate. A criticality safety index is not applicable for these shipments and a separate H(U) or H(M) certificate is not required.

6. Marking and Labeling - The package shall bear the marking USA/0829/AF-96 in addition to other required markings and labeling.

7. Expiration Date - This certificate expires on December 26, 2023. Previous editions which have not reached their expiration date may continue to be used.

CERTIFICATE USA/0829/AF-96, REVISION 1

This certificate is issued in accordance with paragraph(s) 816 of the IAEA Regulations and Section 173.472 and 173.473 of Title 49 of the Code of Federal Regulations, in response to the November 8, 2019 petition by Transport Logistics International (DAHER - TLI), Fulton, MD, and in consideration of other information on file in this Office.

Certified By:

William Schoonover
Associate Administrator for Hazardous Materials Safety

December 02, 2019
(DATE)

Revision 1 - Issued to endorse French Certificate of Approval No. F/420/AF(Ab).

AUTORITÉ DE SÛRETÉ NUCLÉAIRE

DIRECTION FOR TRANSPORTS AND SOURCES

CERTIFICATE OF APPROVAL
FOR A PACKAGE DESIGN

The French competent authority,

Considering article R. 595-1 of the Environment Code;

Considering the application filed by **DAHER** Company with its letter of 13 September 2019 referenced 0023-SVK-2019-016, completed with the letter of 15 October 2019 referenced 0023-SVK-2019-022;

Considering DAHER Safety Report of 13 September 2019 referenced 0023-BSH-2016-Rev4;

Certifies that the package design DN30, consisting of a 30B cylinder placed in a DN30 overpack, described in Attachment 0 under Index b and loaded with uranium hexafluoride with a maximum enrichment of 5 % of Uranium 235:

- of commercial grade according to ASTM C996 Standard, or natural, as described in Attachment 1 under Index b;
- reprocessed non-conforming to ASTM C996 Standard, with a restricted composition as described in Attachment 2 under Index b;
- of commercial grade according to ASTM C996 Standard, for "heels" as described in Attachment 3 under Index b;
- reprocessed non-conforming to ASTM C996 Standard, with a restricted composition for "heels" as described in Attachment 4 under Index b;

complies, as a Type A package design loaded with fissile material, with the requirements of the following regulations and agreements:

- Regulations for the Safe Transport of Radioactive Material of the International Atomic Energy Agency, Safety Standards Requirements, No. SSR-6, 2018 issue;
- European Agreement concerning the International Carriage of Dangerous Goods by Road (ADR);
- European Agreement concerning the International Carriage of Dangerous Goods by Inland Waterways (ADN);
- Regulations concerning the International Carriage of Dangerous Goods by Rail (RID);
- International Maritime Dangerous Goods (IMDG Code of OMI);
- Modified Decree of 23 November 1987 relating to the safety of ships, especially Division 411 of the adjoined rules (RSN Decree);
- Modified Decree of 29 May 2009 relating to land transports of dangerous goods (TMD Decree);

This certificate does not dispense the shipper of observing the rules established by the authorities of countries through or to which the package is transported.

www.asn.fr
15, rue Louis Lejeune • CS 70013 • 92541 Montrouge CEDEX
Téléphone 01 46 16 40 00

This certificate is valid until 26 December 2023.

Registration No.: CODEP-DTS-2019-044367

Montrouge, 4 November 2019

For the President of the Nuclear Safety Authority
and in Deputation
the Director of Transport and Sources,

Fabien FÉRON

RECAPITULATION OF CERTIFICATE ISSUES

Issues	Expiration	Type of issue and changes	Authority	Certificate rating	Revision index									
					body	t	0	1	2	3	4	5	6	7
26/12/18	26/12/23	New Approval	ASN	F/420/B(U)F	Aa	-	a	a	a	a	a	a	a	a
26/12/18	26/12/23	New Approval	ASN	F/420/AF	Aa	-	a	a	a	a	a	-	-	-
26/12/18	26/12/23	New Approval	ASN	F/420/IF	Aa	-	a	a	a	a	-	-	-	-
04/11/19	26/12/23	Extension	ASN	F/420/B(U)F	Ab	-	b	b	b	b	b	b	b	b
04/11/19	26/12/23	Extension	ASN	F/420/AF	Ab	-	b	b	b	b	b	-	-	-
04/11/19	26/12/23	Extension	ASN	F/420/IF	Ab	-	b	b	b	b	-	-	-	-

ATTACHMENT 0

DN30 PACKAGING

1. DEFINITION OF THE DN30 PACKAGING

The packaging is designed, manufactured, inspected, tested, serviced and utilised according to the DAHER Safety Report 0023-BSH-2016-001-Rev4 of 13 September 2019.

The packaging, which has a general cylindrical shape, is shown in figs. 0.1 and 0.2.

The parts list of the packaging is given in 0023-STL-1000-000-Rev6.

The overall dimensions of the packaging are:
- height: 1 329 mm ;
- length: 2 437 mm ;
- exterior diameter: 1 216 mm.

The maximum admissible mass of the packaging loaded for transport is 4 100 kg.

The packaging consists of the two following main subassemblies:
- DN30 overpack;
- 30B cylinder.

1.1 DN30 Overpack

The overpack is a cylinder consisting of two half overpacks.
Each half overpack consists of an interior half shell and an exterior half shell, both made of stainless steel. The interior half shell is covered by intumescent material.
The space between both shells is filled with rigid polyisocyanurate foam (PIR) and an insulating material.
The horizontal connection between both half overpacks is formed by an ethylene propylene diene monomer (EPDM) gasket.
The overpack stands on four feet.

1.2 30B Cylinder

The 30B cylinder is a carbon steel cylindrical tank closed at each end by a domed head and defined by standards ISO 7195 and ANSI N14.1. The dimensions are:
- nominal length: 2 070 mm (81 ½“);
- nominal exterior diameter: 762 mm (30 ½“);
- nominal mass of the cylinder: 635 kg (1 400 lbs);
- minimum free volume of the cavity: 736 l (26 ft^3);
- minimum thickness: 11 mm (except for small local abrasions).

The cylinder has two openings:
- one valve screwed to a domed head, for filling and emptying;
- a plug screwed to the other domed head, for emptying.

A skirt forms an extension of the cylindrical part at each end, protecting valve and plug during operation activities.

1.3 Closure system

The DN30 packaging is closed by means of six mortise-and-tenon jaws. Each jaw consists of an upper and a lower part, each with four teeth with a central hole. The upper and lower parts are connected by a closing rod passed through the hole in the teeth and secured by a screw.

1.4 Mechanical protection system

Damping of the DN30 packaging in case of drops or shocks is assured by the half shells and the foam between them.

1.5 Handling and stowage elements

Handling of the top half overpack is assured by means of two lifting lugs.
Handling of the packaging is assured by four lifting lugs fastened to the bottom half overpack. Forklift pockets on the bottom half overpack also allow handling the packaging with a fork lift.
Holes in the feet of the packaging allow for stowage.

1.6 Safety functions

Containment is assured by the 30B cylinder, especially by its valve and its plug.

Radiation protection is assured by the 30B cylinder and the metallic elements of the DN30 packaging.

Criticality safety is assured by the confinement system described in Attachment 1 and in Chapter 2.2.5 of the Safety Report of the DN30 packaging.

Protection against shocks is assured by the shock absorbing materials of the packaging**.**

Protection against effects of a fire is assured by PIR foam, the insulating material, the intumescent material and the thermal plugs**.**

2. REQUIREMENTS FOR THE SHIPPER BEFORE SHIPMENT OF THE PACKAGE

The packaging is used following procedures in compliance with handling instructions 0023-HA-2015-001-Rev6, 0023-PA-2015-015-Rev4 and 0023-PA-2015-017-Rev2.

To assess the maximum dose rate of a DN30 packaging with a filled cylinder, the measured gamma dose rate must be multiplied by 1.05 in order to take into account the neutron dose rate when the latter is not directly measured.

3. MAINTENANCE PROGRAM

Maintenance of the packaging is carried out complying to the provisions of Chapter 1.8 of the Safety Report and the test instructions 0023-PA-2015-015-Rev4 and 0023-PA-2015-016-Rev4.
Maintenance of the 30B cylinder is carried out following the provisions of Standard ISO 7195.

4. NOTIFICATION AND REGISTRATION OF SERIAL NUMBERS

Any decommissioning or change of owners of a packaging must be reported to the competent authorities. To this end, an owner who sells a packaging transmits the name of the purchaser.

5. MANAGEMENT SYSTEM

The principles of the management system which must be observed during the design, manufacturing, inspection, testing, maintenance and utilisation of the packaging comply with those described in Chapter 1.9 of the Safety Report.

6. COMPLEMENTARY PRESCRIPTION FOR RAIL TRANSPORTS

The shunting label No. 15 mentioned in 5.3.4.2 of RID is fastened to the exterior wall of the freight wagons. Thus, for each rail transport, the train shall be accompanied by a motive power unit. Hump shunting is forbidden, the wagons shall not bump, or be bumped, by other wagons.

FIGURE 0.1

EXTERIOR VIEW OF THE OVERPACK

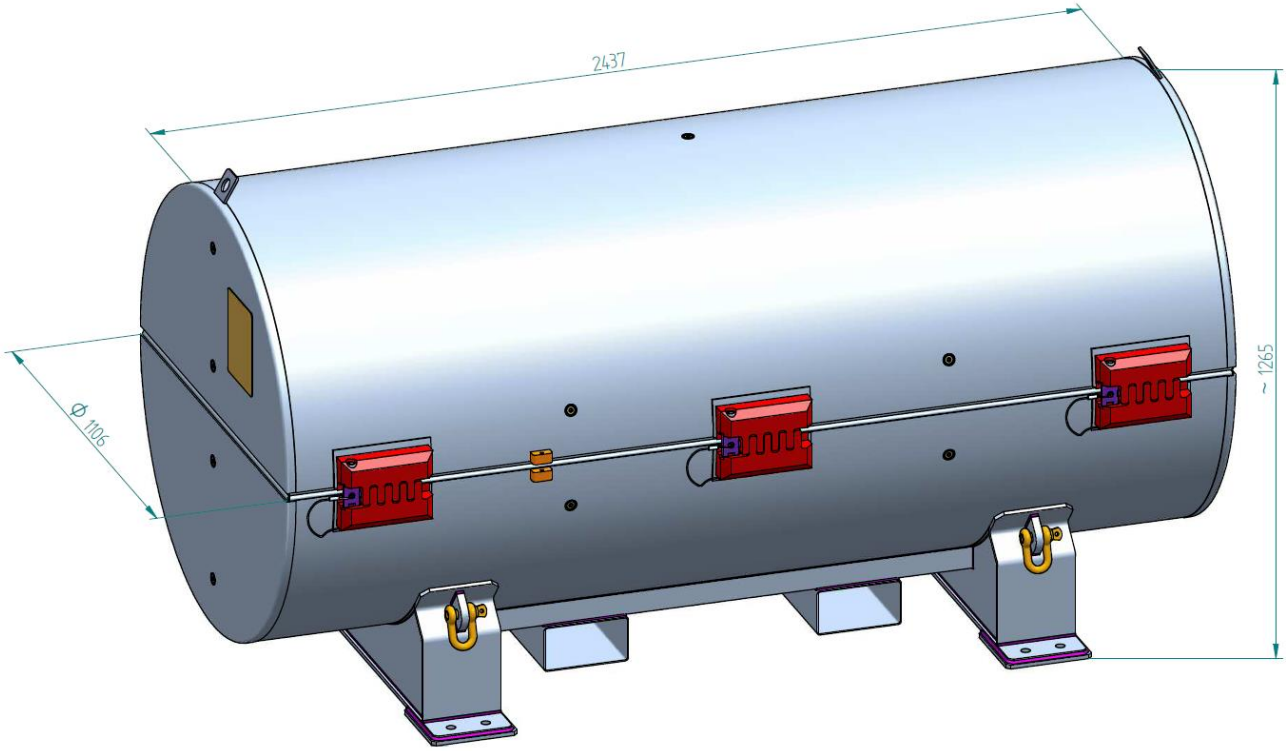

FIGURE 0.2

PICTURE OF THE BOTTOM OVERPACK AND EXPLODED VIEW

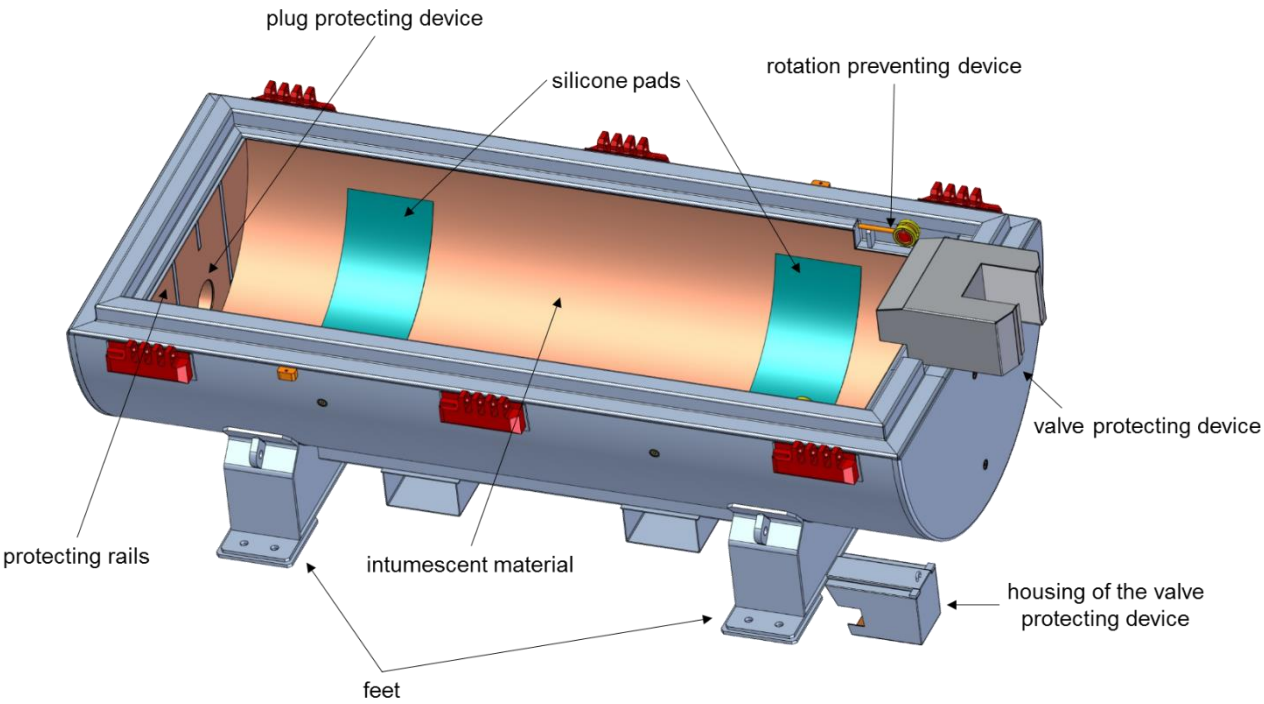

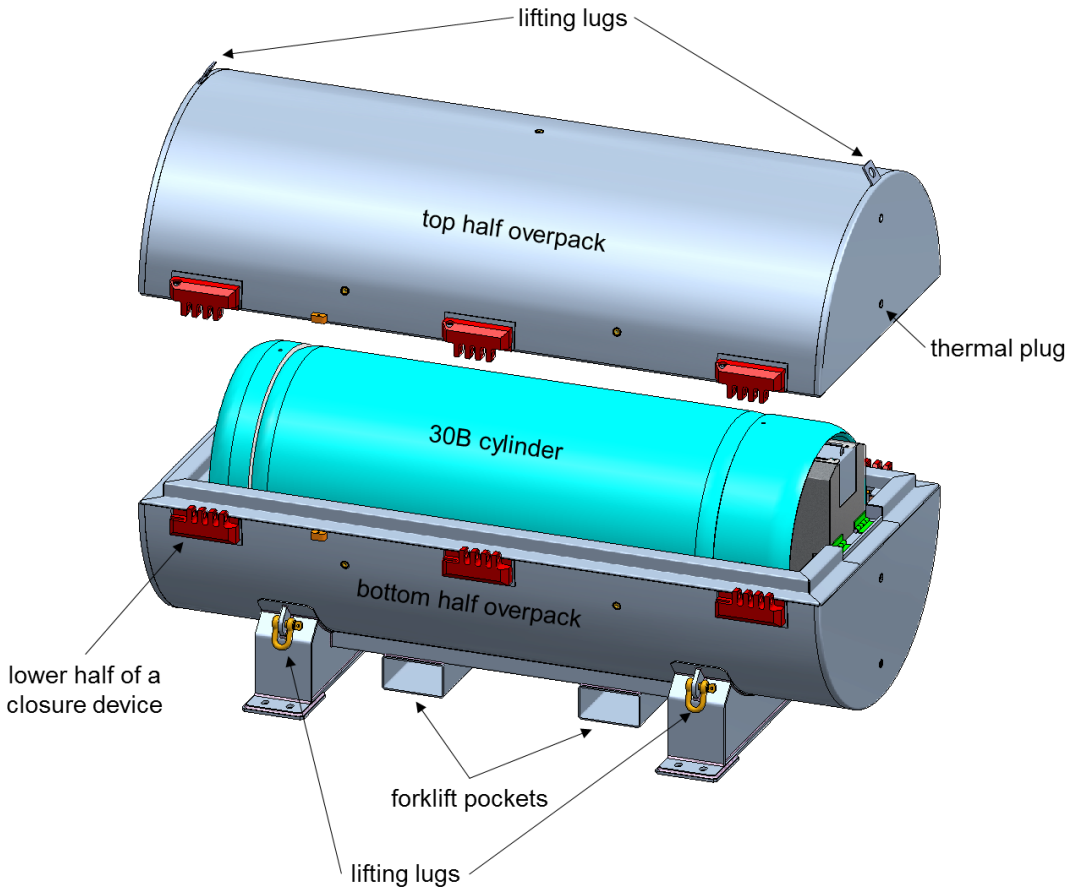

ATTACHMENT 1

CONTENT No. 1
COMMERCIAL GRADE URANIUM HEXAFLUORIDE ACCORDING TO STANDARD ASTM C996 OR NATURAL URANIUM

1. DEFINITION OF THE AUTHORISED CONTENT

The authorised radioactive content is described in Attachment 1.3 of Safety Report 0023-BSH-2016-001-Rev4. It fulfils the following conditions:

- the content either complies with the definition of «**Enriched Commercial Grade UF_6**» of Standard ASTM C996, or consists of natural uranium;
- the permissible mass of UF_6 in a full 30B cylinder is between 11.4 kg and 2 277 kg;
- the ^{235}U enrichment does not exceed 5 %;
- the activity of the content does not exceed 1 A_2;
- the minimum purity of the transported UF_6 is 99.5 % according to Standard ASTM C996;
- the heat generation rate of the content does not exceed 3 W.

The content of the 30B cylinder fulfils the following conditions:

Radionuclide	Maximum concentration (wt%)
^{232}U	1×10^{-8}
^{234}U	5.5×10^{-2}
^{235}U	5
^{236}U	2.5×10^{-2}
^{238}U	100
^{99}Tc	1×10^{-6}

2. DEMONSTRATION OF CRITICALITY SAFETY

The demonstration of criticality safety is documented in Chapter 2.2.5 of Safety Report 0023-BSH-2016-001-Rev4. The confinement system considered is:

- the fissile material (mass, purity, ^{235}U enrichment, chemical form),
- the 30B cylinder (dimension and thickness),
- the DN30 overpack (dimension and materials).

The criticality safety index (CSI) is 0.

ATTACHMENT 2

CONTENT No. 2
REPROCESSED URANIUM HEXAFLUORIDE NON CONFORMING WITH A RESTRICTED COMPOSITION

1. DEFINITION OF THE AUTHORISED CONTENT

The authorised radioactive content is described in Attachment 1.3 of Safety Report 0023-BSH-2016-001-Rev4. It fulfils the following conditions:

- although it contains reprocessed uranium, the content is **not compliant** with the definition of «Reprocessed UF_6» of Standard ASTM C996;
- the permissible mass of UF_6 in a full 30B cylinder is between 11.4 kg and 2 277 kg;
- the ^{235}U enrichment does not exceed 5 %;
- the activity of the content does not exceed 1 A_2;
- the minimum purity of the transported UF_6 is 99.5 % according to Standard ASTM C996;
- the heat generation rate of the content does not exceed 3 W.

The content of the 30B cylinder fulfils the following conditions:

Radionuclide	Maximum concentration (wt%)	Maximum gamma radiation (MeV·Bq/kg U)	Maximum alpha activity (Bq/kg U)
^{232}U	6×10^{-8}		
^{234}U	3×10^{-4}		
^{235}U	5		
^{236}U	2.5×10^{-2}		
^{238}U	100		
Fission products*		4.4×10^{5}	
^{99}Tc	5.0×10^{-4}		
Neptunium and plutonium			3.3×10^{3}
* includes ^{60}Co			

2. DEMONSTRATION OF CRITICALITY SAFETY

The demonstration of criticality safety is documented in Chapter 2.2.5 of Safety Report 0023-BSH-2016-001-Rev4. The confinement system considered is:

- the fissile material (mass, purity, ^{235}U enrichment, chemical form),
- the 30B cylinder (dimension and thickness),
- the DN30 overpack (dimension and materials).

The criticality safety index (CSI) is 0.

ATTACHMENT 3

CONTENT No. 3
«HEELS» FROM COMMERCIAL GRADE URANIUM HEXAFLUORIDE COMPLYING WITH STANDARD ASTM C996

1. DEFINITION OF THE AUTHORISED CONTENT

The authorised radioactive content is described in Attachment 1.3 of Safety Report 0023-BSH-2016-001-Rev4. It fulfils the following conditions:

- it consists of uranium that complies with the definition of «**Enriched Commercial Grade UF_6**» of Standard ASTM C996 or of natural uranium;
- the permissible mass of UF_6 in the «heels», as defined in Standard ISO 7195, does not exceed 11.4 kg;
- the ^{235}U enrichment does not exceed 5 %;
- the activity of the content does not exceed 1 A_2;
- the heat generation rate of the content does not exceed 3 W.

The content of the 30B cylinder fulfils the following conditions:

Radionuclide	Maximum concentration (wt%)
^{232}U	1×10^{-8}
^{234}U	5.5×10^{-2}
^{235}U	5
^{236}U	2.5×10^{-2}
^{238}U	100

Radionuclide	Maximal activity (Bq)
^{99}Tc	1.08×10^{8}

Daughter products of the radionuclides mentioned in the tables above can also be present in the content of the 30B cylinder.

2. <u>DEMONSTRATION OF CRITICALITY SAFETY</u>

The demonstration of criticality safety is documented in Chapter 2.2.5 of Safety Report 0023-BSH-2016-001-Rev4. The confinement system considered is:

- the fissile material (mass, purity, ^{235}U enrichment, chemical form),
- the 30B cylinder (dimension and thickness),
- the DN30 overpack (dimension and materials).

The criticality safety index (CSI) is 0.

ATTACHMENT 4

CONTENT No. 4
"HEELS" FROM REPROCESSED URANIUM HEXAFLUORIDE WITH A RESTRICTED COMPOSITION

1. DEFINITION OF THE AUTHORISED CONTENT

The authorised radioactive content is described in Attachment 1.3 of Safety Report 0023-BSH-2016-001-Rev4. It fulfils the following conditions:

- it consists of uranium that is **not compliant** with the definition of «Reprocessed UF_6» of Standard ASTM C996;
- the permissible mass of UF_6 in the «heels», as defined in Standard ISO 7195, does not exceed 11.4 kg;
- the ^{235}U enrichment does not exceed 5 %;
- the activity of the content does not exceed 1 A_2;
- the minimum purity of the transported UF_6 is 99.5 % according to Standard ASTM C996;
- the heat generation rate of the content does not exceed 3 W.

The content of the 30B cylinder fulfils the following conditions:

Radionuclide	Maximum concentration (wt%)
^{232}U	6×10^{-8}
^{234}U	3×10^{-4}
^{235}U	5
^{236}U	2×10^{-2}
^{238}U	100

Radionuclide	Maximum gamma radiation (MeV·Bq)
Fission products	6.78×10^{8}

Radionuclide	Maximal activity (Bq)
^{99}Tc	4.87×10^{9}

Radionuclides	Maximum alpha activity (Bq)
Neptunium and plutonium	5.08×10^{6}

Daughter products of the radionuclides mentioned in the tables above can also be present in the content of the 30B cylinder.

2. DEMONSTRATION OF CRITICALITY SAFETY

The demonstration of criticality safety is documented in Chapter 2.2.5 of Safety Report 0023-BSH-2016-001-Rev4. The confinement system considered is:

- the fissile material (mass, purity, ^{235}U enrichment, chemical form),
- the 30B cylinder (dimension and thickness),
- the DN30 overpack (dimension and materials).

The criticality safety index (CSI) is 0.

U.S. Department of
Transportation

**Pipeline and
Hazardous Materials
Safety Administration**

**East Building, PHH-23
1200 New Jersey Ave, SE
Washington, D.C. 20590**

CERTIFICATE NUMBER: USA/0829/AF-96

ORIGINAL REGISTRANT(S):

Transport Logistics International (DAHER - TLI)
8161 Maple Lawn Boulevard
Suite 480
Fulton, MD, 20759
USA

Daher Nuclear Technologies
Margarete-von-Wrangell-Straße 7
Hanau, Hesse, 63457
Germany