U.S. Department of Transportation

Pipeline and Hazardous Materials Safety Administration

East Building, PHH-23
1200 New Jersey Ave, SE
Washington, D.C. 20590

COMPETENT AUTHORITY CERTIFICATION FOR A TYPE B(U) RADIOACTIVE MATERIALS PACKAGE DESIGN CERTIFICATE USA/0791/B(U)-96, REVISION 3

REVALIDATION OF CANADIAN COMPETENT AUTHORITY CERTIFICATE CDN/2080/B(U)-96

The Competent Authority of the United States certifies that the radioactive material package design described in this certificate satisfies the regulatory requirements for a Type B(U) package as prescribed in the regulations of the International Atomic Energy Agency[1] and the United States of America[2].

1. Package Identification - F-168/F-444 Transport Container.

2. Package Description and Authorized Radioactive Contents - as described in Canadian Certificate of Competent Authority CDN/2080/B(U)-96, Revision 6 (attached).

3. General Conditions -

   a. Each user of this certificate must have in his possession a copy of this certificate and all documents necessary to properly prepare the package for transportation. The user shall prepare the package for shipment in accordance with the documentation and applicable regulations.

   b. Each user of this certificate, other than the original petitioner, shall register his identity in writing to the Office of Engineering and Research, (PHH-23), Pipeline and Hazardous Materials Safety Administration, U.S. Department of Transportation, Washington D.C. 20590-0001.

   c. This certificate does not relieve any consignor or carrier from compliance with any requirement of the Government of any country through or into which the package is to be transported.

---

[1] "Regulations for the Safe Transport of Radioactive Material, 2012 Edition, No. SSR-6" published by the International Atomic Energy Agency (IAEA), Vienna, Austria.

[2] Title 49, Code of Federal Regulations, Parts 100-199, United States of America.

CERTIFICATE USA/0791/B(U)-96, REVISION 3

d. Records of Management System activities required by Paragraph 306 of the IAEA regulations[1] shall be maintained and made available to the authorized officials for at least three years after the last shipment authorized by this certificate. Consignors in the United States exporting shipments under this certificate shall satisfy the applicable requirements of Subpart H of 10 CFR 71.

4. Marking and Labeling - The package shall bear the marking USA/0791/B(U)-96 in addition to other required markings and labeling.

5. Expiration Date - This certificate expires on November 30, 2024. Previous editions which have not reached their expiration date may continue to be used.

This certificate is issued in accordance with paragraph(s) 810 of the IAEA Regulations and Section 173.473 of Title 49 of the Code of Federal Regulations, in response to the August 6, 2019 petition by Nordion (Canada) Inc., Ottawa, Ontario, and in consideration of other information on file in this Office.

Certified By:

for William Schoonover
Associate Administrator for Hazardous Materials Safety

September 12, 2019
(DATE)

Revision 3 - Issued to revalidate Canadian Certificate of Approval No. CDN/2080/B(U)-96, Revision 6.

Canadian Certificate No.: **CDN/2080/B(U)-96 (Rev. 6)**
Issue Date: **Aug-02-2019**
Expiry Date: **Nov-30-2024**
CNSC File: **30-A2-94-3**

Certificate

CDN/2080/B(U)-96 (Rev. 6)

Transport Package Design

The transport package design identified below is certified by the Canadian Nuclear Safety Commission pursuant to paragraph 21(1)(h) of the *Nuclear Safety and Control Act* and Subsection 10(1) of the *Packaging and Transport of Nuclear Substances Regulations*, 2015 and to the IAEA's *Regulations for the Safe Transport of Radioactive Material*, 2012 Edition.

REGISTRATION OF USE OF PACKAGES

All users of this authorization shall register their identity in writing with the Canadian Nuclear Safety Commission prior to the first use of this authorization and shall certify that they possess the instructions necessary for preparation of the package for shipment.

PACKAGE IDENTIFICATION

Designer:	**Nordion (Canada) Inc.**
Make/Model:	**F-168/F-444 Transport Container**
Mode of Transport:	**Air, Sea, Road, Rail**

IDENTIFICATION MARK

The package shall bear the competent authority identification mark **"CDN/2080/B(U)-96".**

PACKAGE DESCRIPTION

The packaging is composed of an F-168 package, as shown on Nordion drawing entitled "Nordion Drawing Nos. F116801-001, (Rev. X) and F116801-020, (Rev. H)" and a F-444 Leakproof container, as shown on Nordion Drawing No. F144409-001 (Rev. G). The F-168 consists of a 266 mm lead-filled shielding steel encased right cylinder with external fins, insulated steel flame shields on the top and side, steel covered insulation on the bottom and an optional heat screen on the top. The cavity is equipped with a drain and vent line for pool loading. The package is permanently mounted on a structural steel base. The F-444 Leakproof insert consists of a 105 mm diameter stainless steel cylinder with a welded bottom plate, a removable lid closed by 16 3/8 - 16UNC x 44.5 mm long bolts and a Flexpro gasket and two bellows valves welded to the bottom plate.

An illustration of the packages is shown on attached Drawing No. F-168/F-444, (Issue 1).

Any modification to the package design must be submitted to the CNSC for approval prior to implementation.

The configuration of the package is as follows:

Shape:	**Cylinder**	Shielding:	**Lead**
Mass:	**5445 kg**	Outer Casing:	**Steel**
Length:	**1372 mm**	Height:	**1659 mm**
Width:	**1372 mm**	Diameter:	**1013 mm**

AUTHORIZED RADIOACTIVE CONTENTS

The package is authorized to contain not more than 3,700 TBq of Cobalt 60 in either the C-132, C-188, C-442 leaking capsules or Aluminum reactor targets all contained within the F-444 Leakproof container.

QUALITY ASSURANCE

Quality assurance for the design, manufacture, testing, documentation, use, maintenance and inspection of the package shall be in accordance with:

- Nordion document entitled "MDS Nordion Specification No. IN/DS 1811 F-168 (2), Design Manufactuing and Operating Specification for the F-168 and F-168-X Transport Packages"
- Nordion document entitled "MDS Nordion Specification No. IN/TS 0100 F000 (13), Technical Specification for Leakproof Inserts"
- Nordion document entitled "MDS Nordion Procedure No. IN/IM 1746 F444 (1), Inspection and Maintenance Procedure for the F-444 Leakproof Container"
- Nordion Document No. IN/QA 0224 Z000 (12)* "Radioactive Material Transport Package Quality Plan"
- Packaging and Transport of Nuclear Substances Regulations, 2015
- IAEA Regulations for the Safe Transport of Radioactive Material, 2012 Edition
- *Or latest current revision.

SHIPMENT

The preparation for shipment of the package shall be in accordance with:

- Nordion Procedure No. IN/PP 2656 F444 (1), "Loading and Preparation for Shipment of the F168/F444 Package"
- Nordion Procedure No. IN/PP 2655 F444 (1), "Underwater Loading and Vacuum Drying of The F-444 Leak proof Container"
- Packaging and Transport of Nuclear Substances Regulations, 2015
- IAEA Regulations for the Safe Transport of Radioactive Material, 2012 Edition

For shipment by air transport, the content of cobalt-60 is limited to 1200 TBq. For heat fluxes exceeding 15 W/m² supplementary arrangements must be made with the carrier to ensure adequate heat dissipation.

This certificate does not relieve the consignor from compliance with any requirement of the government of any country through or into which the package will be transported.

K. Owen-Whitred
Designated Officer pursuant to paragraph 37(2)(a)
of the Nuclear Safety and Control Act

NOTES

Revision 3: May 31, 2012. Certificate amended. Procedure No. IN/EP 0434 F444 revised; preparation for shipment and underwater loading of leaking sources.
Revision 4: November 24, 2014. Certificate renewed.
Revision 5: February 9, 2017. Certificate revised to add new content.
Revision 6: August 2, 2019. Certificate renewed.

Parts List

1. Upper fireshield
2. Optional heat screen
3. Retaining brackets (4) for upper fireshield
4. Radiation caution plate
5. MDS Nordion identification plate
6. Fireshield (removable) - O.D. 1,013 mm (39.88 in.), laminated construction: 2 x 6.3 mm (0.25 in.) steel + 25.4 mm (1 in.) Kaowool
7. Warning plate "CAUTION - HEAT EMITTER - DO NOT STORE IN INSULATED OR REFRIGERATION CONTAINER OR INSULATED SPACE"
8. Ceramic insulation - steel encased
9. Vermiculite packing
10. Gasket (Neoprene)
11. 7/8 - 9 Hex Bolt (8)
12. Wire seal
13. 3/8 in. NPT pipe plug (2)
14. Plug lift lug
15. Vent tube
16. Plug
17. Cavity: 479 mm x 162 mm dia. (18.87 in. x 6.37 in. dia.)
18. Radioactive contents in F-444 Leakproof Container
19. Drain tube
20. 3/4 -10 hex bolt for skid (4)
21. Optional removable shipping skid, 1,370 mm (54 in.) square
22. Nipple and drainline cap
23. Shield plate with 3/8 -16 screws (3)
24. Category label (2)
25. Eye bolt
26. Eye bolt cover
27. UN number label (2)

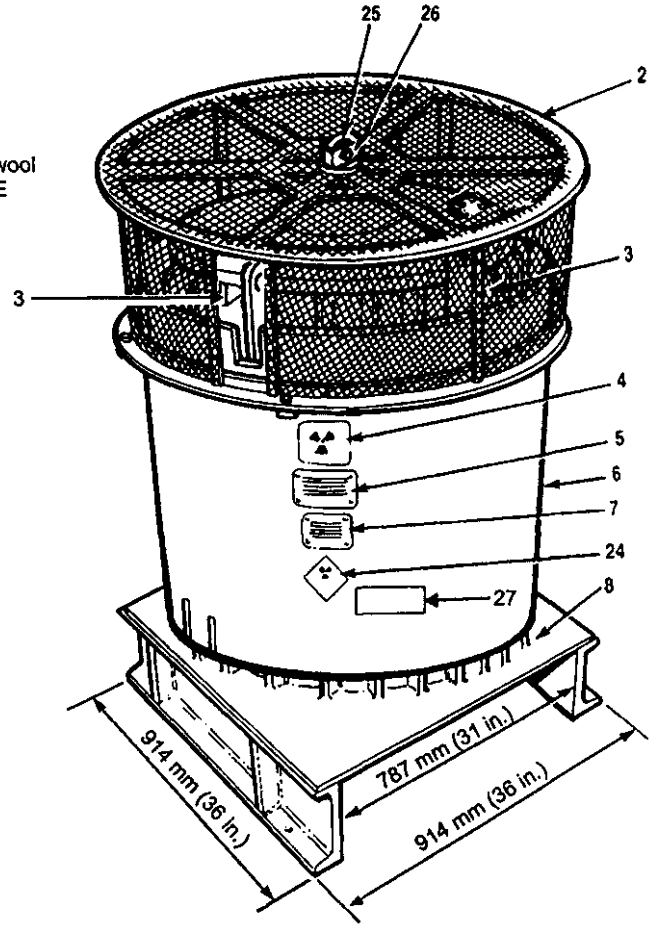

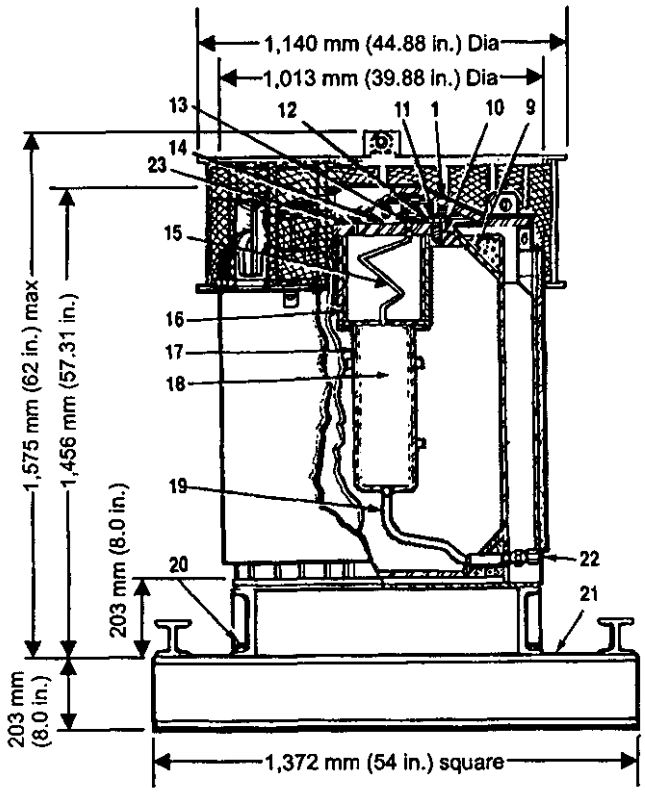

Notes

1. CNSC Certificate CDN/2080/B(U)-96
2. Meets IAEA Type B(U) requirements
3. Steel encased lead shielding: 266 mm (10.5 in.)
4. Gross weight: 5,445 kg (12,000 lb.)
5. Plug weight: 177 kg (390 lb.)
6. Projected floor loading: 2,900 kg/m² (593 lb./ft.²)
7. Radionuclides carried: Cobalt-60
8. Labels may be positioned as illustrated, or 45° to that shown

MDS Nordion

447 March Road, P.O. Box 13500
Kanata, Ontario, Canada, K2K 1X8
Tel: (613) 592-2790 · Fax. (613) 592-6937

TITLE

F-168/F-444 Transport Package (To IAEA 1996 Transport Regulations)

REF. IN/SS 1920 F168/F444 F116801-001/F116801-020/F144409-001		REVISED Mar 03	DCN A0848-D-13B
DATE Mar 03		No. F-168/F-444	ISSUE 1
DRAWN BW	CHECKED VE / APPROVED MK MK	SHEET 1 OF 1	

THIS DRAWING IS THE PROPERTY OF MDS NORDION AND IS SUBMITTED FOR CONSIDERATION ON THE UNDERSTANDING THAT THERE SHALL BE NO EXPLOITATION OF ANY INFORMATION CONTINUED HEREIN EXCEPT WITH THE SPECIFIC WRITTEN AGREEMENT OF MDS NORDION.

U.S. Department of
Transportation

**Pipeline and
Hazardous Materials
Safety Administration**

**East Building, PHH-23
1200 New Jersey Ave, SE
Washington, D.C. 20590**

CERTIFICATE NUMBER: USA/0791/B(U)-96

ORIGINAL REGISTRANT(S):

Nordion (Canada) Inc.
447 March Road
Ottawa, Ontario, K2K 1X8
Canada