East Building, PHH-23
1200 New Jersey Ave, SE
Washington, D.C. 20590

U.S. Department of Transportation

Pipeline and Hazardous Materials Safety Administration

IAEA CERTIFICATE OF COMPETENT AUTHORITY
SPECIAL FORM RADIOACTIVE MATERIALS

CERTIFICATE USA/0724/S, REVISION 4

This certifies that the source described has been demonstrated to meet the regulatory requirements for special form radioactive material as prescribed in the regulations of the International Atomic Energy Agency[1] and the United States of America[2] for the transport of radioactive material.

1. Source Identification - QSA Global, Inc. Model XN47 (Manufactured on or after July 16, 1981).

2. Source Description - Cylindrical single encapsulation made of stainless steel and tungsten inert gas or laser seal welded. Approximate outer dimensions are 30.1 mm (1.19 in.) in diameter and 8.3 mm (0.33 in.) in length. Minimum wall thickness is 0.2 mm (0.008 in.). Construction shall be in accordance with attached AEA Technology QSA, Inc. Drawing No. RBA62247, Rev. A.

3. Radioactive Contents - No more than 110.0 GBq (2.97 Ci) of Americium-241. The Am-241 is in the form of an oxide incorporated into a ceramic enamel.

4. Management System Activities - Records of Management System activities required by Paragraph 306 of the IAEA regulations shall be maintained and made available to the authorized officials for at least three years after the last shipment authorized by this certificate. Consignors in the United States exporting shipments under this certificate shall satisfy the requirements of Subpart H of 10 CFR 71.

5. Expiration Date - This certificate expires on January 31, 2030. Previous editions which have not reached their expiration date may continue to be used.

---

[1] "Regulations for the Safe Transport of Radioactive Material, 2018 Edition, No. SSR-6 (Rev. 1)" published by the International Atomic Energy Agency (IAEA), Vienna, Austria.

[2] Title 49, Code of Federal Regulations, Parts 100-199, United States of America.

CERTIFICATE USA/0724/S, REVISION 4

This certificate is issued in accordance with paragraph(s) 804 of the IAEA Regulations and Section 173.476 of Title 49 of the Code of Federal Regulations, in response to the December 11, 2024 petition by QSA Global, Inc., Burlington, MA, and in consideration of other information on file in this Office.

Certified By:

for William Schoonover
Associate Administrator for Hazardous Materials Safety

January 21, 2025
(DATE)

Revision 4 - Issued to extend the expiration date and to issue the certificate to the 2018 edition of SSR-6.

Item	Description		No.off
1	BODY	STAIN. STL	1
2	LID	STAIN. STL.	1
3	INSERT	STAIN. STL.	1
4	GASKET	COPPER	1
5	ACTIVE MATERIAL		A/R

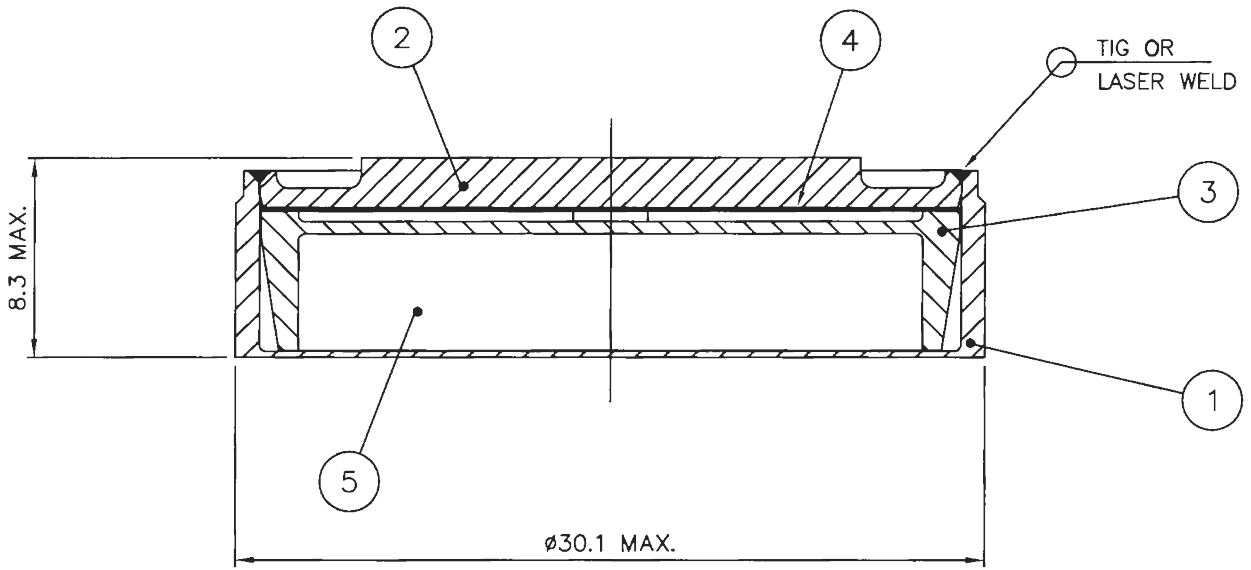

APPROVALS	
D. [signature]	29 Nov 05
[signature]	30 Nov 05

DIMENSIONS IN MILLIMETERES
UNLESS OTHERWISE STATED TOLERANCES:

X ±0.5
X.X ±0.1
X.XX ±0.05
ANGULAR ±5°

INTERNAL N7
EXTERNAL N6

AEA TECHNOLOGY QSA
40 NORTH AVE, BURLINGTON, MA 01803

DESCRIPTIVE DRAWING

TITLE XN47 CAPSULE ASSEMBLY

SIZE A | DWG. NO. RBA62247 | REV A

SCALE: NONE | SHEET 1 OF 1

ERF # 1202

East Building, PHH-23
1200 New Jersey Ave, SE
Washington, D.C. 20590

U.S. Department of Transportation

Pipeline and Hazardous Materials Safety Administration

CERTIFICATE NUMBER: USA/0724/S

ORIGINAL REGISTRANT(S):

QSA Global, Inc.
40 North Avenue
Burlington, MA, 01803
USA