U.S. Department
of Transportation

**Pipeline and
Hazardous Materials
Safety Administration**

East Building, PHH-23
1200 New Jersey Avenue Southeast
Washington, D.C. 20590

**COMPETENT AUTHORITY CERTIFICATION
FOR A NON-FISSILE OR FISSILE EXCEPTED
URANIUM HEXAFLUORIDE PACKAGE DESIGN
CERTIFICATE USA/0681/H(U)-96, REVISION 6**

**REVALIDATION OF UNITED KINGDOM COMPETENT AUTHORITY
CERTIFICATE GB/3572/H(U)-96**

This certifies that the radioactive material package design described has been certified by the Competent Authority of the United States as meeting the regulatory requirements for a packaging for non-fissile or fissile excepted uranium hexafluoride as prescribed in the regulations of the International Atomic Energy Agency[1] and the United States of America[2].

1. Package Identification - 48X or 48Y cylinder with residual (heel) quantity of uranium hexafluoride.

2. Package Description - 48X or 48Y cylinders as described in United Kingdom Certificate of Competent Authority No. GB/3572/H(U)-96, Issue 6, subject to the special conditions listed in Section 5.

3. Authorized Contents - Residual quantities of solid, non fissile or fissile excepted uranium hexafluoride as described in United Kingdom Certificate of Competent Authority No. GB/3572/H(U)-96, Issue 6, and the special conditions listed in Section 6 of this certificate.

4. General Conditions -

   a. Each user of this certificate must have in his possession a copy of this certificate and all documents necessary to properly prepare the package for transportation. The user shall prepare the package for shipment in accordance with the documentation and applicable regulations.

   b. Each user of this certificate, other than the original petitioner, shall register his identity in writing to the Office of Hazardous Materials Technology, (PHH-23), Pipeline and Hazardous Materials Safety Administration, U.S. Department of Transportation, Washington D.C. 20590-0001.

---

[1] "Regulations for the Safe Transport of Radioactive Material, 1996 Edition (Revised), No. TS-R-1 (ST-1, Revised)," published by the International Atomic Energy Agency(IAEA), Vienna, Austria.

[2] Title 49, Code of Federal Regulations, Parts 100-199, United States of America.

c. This certificate does not relieve any consignor or carrier from compliance with any requirement of the Government of any country through or into which the package is to be transported.

d. Records of Quality Assurance activities required by Paragraph 310 of the IAEA regulations[1] shall be maintained and made available to the authorized officials for at least three years after the last shipment authorized by this certificate. Consignors in the United States exporting shipments under this certificate shall satisfy the applicable requirements of Subpart H of 10 CFR 71.

5. Special Conditions -

a. Cylinders transported under this certificate must have been designed and manufactured in accordance with the ANSI N14.1 standand in effect at the time of manufacture.

b. Cylinders transported under this certificate must be operated and maintained in accordance the the ANSI N14.1 standard in effect at the time of shipment.

c. Cylinders transported under this certificate must contain a quantity of uranium hexafluoride which is compliant with both Title 49 of U.S. Code of Federal Regulations and the ANSI N14.1 standard in effect a the time of shipment.

6. Marking and Labeling - The package shall bear the marking USA/0681/H(U)-96 in addition to other required markings and labeling.

7. Expiration Date - This certificate expires on July 31, 2020.

CERTIFICATE USA/0681/H(U)-96, REVISION 6

This certificate is issued in accordance with paragraph 805 of the IAEA Regulations and Section 173.477 of Title 49 of the Code of Federal Regulations, in response to the July 28, 2015 petition by Honeywell, Metropolis, IL, and in consideration of other information on file in this Office.

Certified By:

Dr. Magdy El-Sibaie
Associate Administrator for Hazardous Materials Safety

Sep 16 2015
(DATE)

Revision 6 - Issued to endorse United Kingdom Certificate of Approval No. GB/3572/H(U)-96, Issue 6, for ANSI N14.1 compliant cylinders..

CERTIFICATE OF APPROVAL OF PACKAGE DESIGN FOR THE CARRIAGE OF RADIOACTIVE MATERIAL

This is to certify that, for the purposes of the Regulations of the International Atomic Energy Agency:

- The Competent Authority of Great Britain in respect of inland surface transport, being the Office for Nuclear Regulation;
- The Competent Authority of the United Kingdom of Great Britain and Northern Ireland in respect of sea transport, being the Secretary of State for Transport; and
- The Competent Authority of Northern Ireland in respect of road transport, being the Department of the Environment Northern Ireland;

approve the package design as specified in section 1 of this certificate, as submitted for approval by International Nuclear Services Limited (see section 6)

as: Type H(U)

by: road and rail in Great Britain; sea; and road in Northern Ireland

Packaging Identification: 48X or 48Y uranium hexafluoride cylinders without thermal protection

Packages manufactured to this design meet the requirements of the regulations and codes on page 2, relevant to the mode of transport, subject to the following general condition and to the conditions in the succeeding pages of this certificate.

In the event of any alteration in the composition of the package, the package design, the management system(s) associated with the package or in any of the facts stated in the application for approval, this certificate will cease to have effect unless the Competent Authority is notified of the alteration and the Competent Authority confirms the certificate notwithstanding the alteration.

Expiry Date: This certificate is valid until the end of July 2020 (see section 6)

COMPETENT AUTHORITY IDENTIFICATION MARK:

GB/3572/H(U)-96

Signature: G Sallit

Date of Issue: 21 July 2015

George Sallit
Deputy Chief Inspector
Office for Nuclear Regulation
4NG Redgrave Court
Merton Road, Bootle
Merseyside L20 7HS

on behalf of the Office for Nuclear Regulation; the Secretary of State for Transport; and the Department of the Environment Northern Ireland

This certificate does not relieve the consignor from compliance with any requirement of the government of any country through or into which the package will be transported.

REGULATIONS GOVERNING THE TRANSPORT OF RADIOACTIVE MATERIALS

INTERNATIONAL

International Atomic Energy Agency (IAEA)
SSR-6 Regulations for the Safe Transport of Radioactive Material 2012 Edition

United Nations Economic Commission for Europe (UNECE)
European Agreement concerning the International Carriage of Dangerous Goods by Road (ADR) 2015 Edition

Intergovernmental Organisation for International Carriage by Rail (OTIF)
Regulations concerning the International Carriage of Dangerous Goods by Rail (RID) 2015 Edition

International Maritime Organization (IMO)
International Maritime Dangerous Goods (IMDG) Code 2014 Edition incorporating Amendment 37-14

UNITED KINGDOM

ROAD
GREAT BRITAIN ONLY:
The Energy Act 2013 (2013 c. 32); The Carriage of Dangerous Goods and Use of Transportable Pressure Equipment Regulations 2009 (SI 2009 No. 1348); The Carriage of Dangerous Goods and Use of Transportable Pressure Equipment (Amendment) Regulations 2011 (SI 2011 No. 1885); The Energy Act 2013 (Office for Nuclear Regulation) (Consequential Amendments, Transitional Provisions and Savings) Order 2014 (SI 2014 No. 469)

NORTHERN IRELAND ONLY:
The Carriage of Dangerous Goods and Use of Transportable Pressure Equipment Regulations (Northern Ireland) 2010, SR 2010 No 160; The Carriage of Dangerous Goods and Use of Transportable Pressure Equipment (Amendment) Regulations (Northern Ireland) 2011, No 365

RAIL
GREAT BRITAIN ONLY:
The Energy Act 2013 (2013 c. 32); The Carriage of Dangerous Goods and Use of Transportable Pressure Equipment Regulations 2009 (SI 2009 No. 1348); The Carriage of Dangerous Goods and Use of Transportable Pressure Equipment (Amendment) Regulations 2011 (SI 2011 No. 1885); The Energy Act 2013 (Office for Nuclear Regulation) (Consequential Amendments, Transitional Provisions and Savings) Order 2014 (SI 2014 No. 469)

SEA
British registered ships and all other ships whilst in United Kingdom territorial waters:
The Merchant Shipping Act 1995 (1995 c. 21); The Merchant Shipping (Dangerous Goods and Marine Pollutants) Regulations 1997 (SI 1997 No. 2367); Merchant Shipping Notice MSN 1854 (M) The Carriage of Dangerous Goods and Marine Pollutants in Packaged Form: Amendment 37-14 to the International Maritime Dangerous Goods (IMDG) Code

1. PACKAGE DESIGN SPECIFICATION

The package design specification shall be in accordance with the International Nuclear Services (INS) Transport Report No. 111, Revision 8, dated 17 July 2015 and modifications to the package design approved by the authorities named on page 1 of this certificate under the established modifications procedure.

1.1 Specification of Packaging

Design No.	Title (number of components)	Drawing / Drawing List	Issue
3572	48X or 48Y Cylinder (one) with valve protector or valve protector alternate (VPA)	ANSI N14.1 Figure 11 or 12 and 13	2012
		ISO7195 Figure 11 or 13	2005

1.2 Authorised Contents

1.2.1 Solid, depleted, natural or reprocessed (U-232 maximum concentration 0.005µg/gU), non-fissile or fissile excepted, uranium hexafluoride. The quantity shall be limited as specified in the following table:

Cylinder Type	Maximum Residual Quantity (kg UF_6)
48X (with VPA)	121.7
48Y (with VPA)	159.4
48X / 48Y (with VPA or valve protector)	22.7 (heel)

1.3 Package Dimensions and Weights

1.3.1 Nominal dimensions: 48X – 1219mm diameter x 2940mm long,
48Y – 1219mm diameter x 3727mm long
(see section 5 for package illustration)

1.3.2 Nominal gross weight: 48X – 2174kg
48Y – 2529kg

1.4 Containment System

1.4.1 The containment system is composed of the cylinder outer shell, valve and plug.

2. USE OF PACKAGE

2.1 Use of Package / Supplementary Operational Controls

2.1.1 The package shall be used, handled and maintained in accordance with ANSI N14.1 or ISO7195, section 4 and Appendix U of the INS Transport Report No. 111 referred to in section 1 above.

2.2 Actions Prior to Shipment

2.2.1 Administrative controls shall ensure that the contents are in accordance with section 1 above, and that the consignor and consignee hold a copy of the instructions on the use of the packaging.

2.2.2 For cylinders with reprocessed heels, radiation measurements at the time of consignment shall be undertaken to demonstrate compliance with transport limits.

2.3 Emergency Arrangements

2.3.1 Before shipment takes place, the consignor / carrier shall have drawn up suitable emergency plans, copies of which shall be supplied to the GB Competent Authority on demand.

2.3.2 If the consignor's / carrier's own, or other approved emergency plans cannot be initiated, for any reason, then the police shall be informed immediately and requested to call NAIR (National Arrangements for Incidents involving Radioactivity).

2.4 Ambient Temperature Range for Package Design

2.4.1 -40°C to +38°C

2.5 Prescriptions of SSR-6 Paragraph 634 that apply

2.5.1 None of the prescriptions of the IAEA SSR-6 2012 Edition paragraph 634 apply.

3. MANAGEMENT SYSTEMS

3.1 The management system(s) assessed as adequate in relation to this design by the authorities named on page 1 of this certificate, at the date of issue, are as specified in the INS Report No. 111 referred to in section 1 above, and also comprise the following:

3.1.1 Management System Manual, INS PNTL MSM PROM 000 – M01, Issue 3 September 2014 ; and

3.1.2 any other management system(s), testing, manufacture, documentation, use, maintenance, inspection, transport and in-transit storage operations providing they comply with national standards for management system(s) agreed as acceptable by the authorities named on page 1 of this certificate.

3.2 Any management system(s) not made available for assessment by the authorities named on page 1 of this certificate prior to the date of issue of this certificate and applicable to any stage of design, testing, manufacture, documentation, use, maintenance, inspection, transport and in-transit storage operations, must, prior to their implementation or use, be submitted to and confirmed as adequate by the authorities named on page 1 of this certificate.

3.3 No alteration may be made to any management system(s) confirmed as adequate in relation to this design, unless:

3.3.1 the authorities named on page 1 of this certificate have confirmed the amended management system(s) is adequate prior to implementation or use; or

3.3.2 the alteration falls within the agreed change control procedures set out in the management system(s).

4. ADMINISTRATIVE INFORMATION

4.1 Other Related Certificates (alternative radioactive contents)

4.1.1 This certificate forms the base approval of this design. No other related GB certificates based on the 3572 exist at the time of compilation of this design approval certificate.

4.2 Additional Technical Data / Information

4.2.1 At the time of compilation of this design approval certificate, The Ionising Radiations Regulations 1999, SI 1999 No 3232 and Approved Code of Practice apply, with regard to radiation protection, to all modes of transport; The Dangerous Substances in Harbour Areas Regulations 1987, SI 1987 No 37, apply in GB Ports; and The Dangerous Substances in Harbour Areas Regulations (Northern Ireland) 1991, SR 1991 No. 509 apply to NI Ports.

4.3 Shipment Approval

4.3.1 Not required.

5. PACKAGE ILLUSTRATION

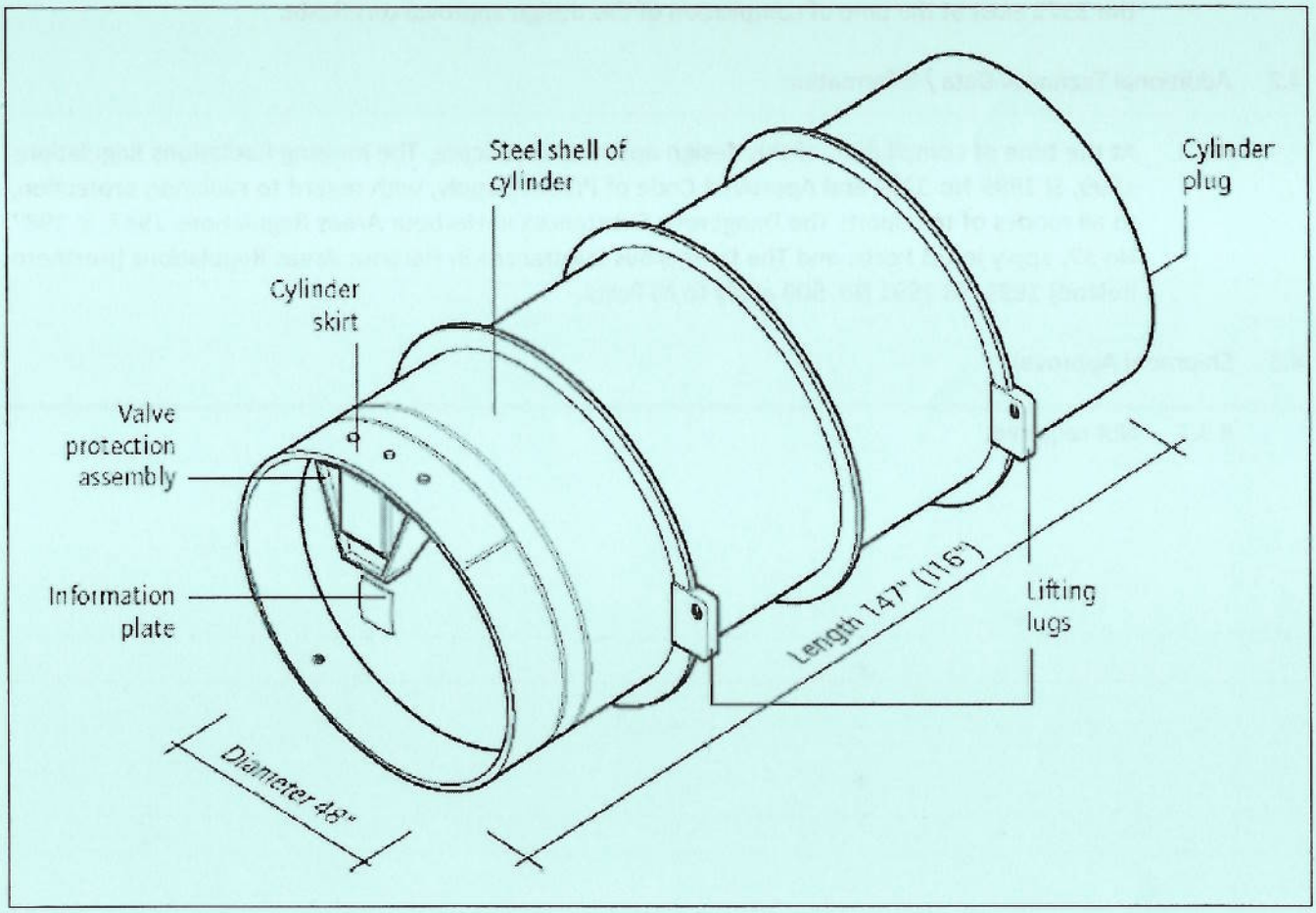

48Y (48X) UF_6 Cylinder (bare) (all dimensions are approximate)

6. CERTIFICATE STATUS

Design Approval issued to:

International Nuclear Services Limited
Package Approvals Section
H260 Hinton House
Birchwood Park Avenue
Risley
Warrington
WA3 6GR
United Kingdom

Issue No.	Date of Issue	Date of Expiry	Reason for Revision
1	28 May 2004	31 May 2007	New approval
2	23 December 2004	31 May 2007	DSR raised to issue 4
3	19 March 2009	31 March 2014	Renewal of certificate
4	20 May 2014	31 May 2015	Renewal based on BNFL Report No. 111 Issue 4
5	24 June 2014	30 June 2015	Revised to allow use of lifting lugs
6	As on page 1	31 July 2020	Renewal based on INS Transport Report No. 111 Revision 8

U.S. Department
of Transportation

East Building, PHH-23
1200 New Jersey Avenue SE
Washington, D.C. 20590

**Pipeline and
Hazardous Materials
Safety Administration**

CERTIFICATE NUMBER: USA/0681/H(U)-96, Revision 6

ORIGINAL REGISTRANT(S):

Mr. Jason Cybulski
Specialty Materials - Fluorine Products
Honeywell
Route 45 North
P.O. Box 430
Metropolis, 62960
USA

Mr. David Steele
Specialty Materials - Fluorine Products
Honeywell
Route 45 North
P.O. Box 430
Metropolis, 62960
USA

REGISTERED USER(S):

Mr. Scott Murray
Manager, Facility Licensing
Global Nuclear Fuels - Americas
3901 Castle Hayne Road
Mail Code K-84
Wilmington, 28401
USA

Mr. Phillip Ollis
Global Nuclear Fuels - Americas
3901 Castle Hayne Road
Mail Code K-84
Wilmington, 28401
USA

Ms. Franchone Oshinowo
Vice President of Operations
Edlow International Company
1666 Connecticut Ave, N.W.
Suite 201
Washington, 20009
USA

Mr. Mark Lambert
Transport Logistics International
Transport Logistics International
8161 Maple Lawn Blvd.
Suite 450
Fulton, 20759
USA

Mr. Marc Andre Charette
Manager, Transportation and Security
Cameco
Fuel Services
One Eldorado Place
Port Hope, L1A3A1
CANADA

Mr. Jim Davis
Areva - TN Inc
2101 Horn Rapids Road
Richland, WA 99352

Ms. Marilena Conde
Vice President, Marketing and Administration
Edlow International Company
1666 Connecticut Ave, N.W
Suite 201
Washington, 20009
USA

Ralf Witten
Areva - TN Inc
Abteilung ANF-LP
Advanced Nuclear Fuels GmbH
Postfach 1485
Lingen, Niedersachsen 49784
Germany

Mr. Robert Link
Areva - TN Inc
2101 Horn Rapids Road
Richland, 99352
USA

Jarod Bowden
Package Approvals Engineer
International Nuclear Services Ltd
Hinton House
Risley
Warrington, Cheshire WA3 6GR
UK

Glenn Mathues
Licensing Engineer (Transportation)
Areva - TN Inc
7135 Minstrel Way
Suite 300
Columbia, MD 21045

Garry Owen
Technical Manager, Engineering & Package Approvals Section
International Nuclear Services Ltd
Hinton House
Risley
Warrington, Cheshire WA3 6GR
UK

Mr. Michael Peers
Regulatory Liaison Manager
Urenco
URENCO UK Limited
Capenhurst
Chester, zz CH1 6ER
United Kingdom

Norman Kent
Director Engineering Services
Transport Logistics International
TLI Engineering Services
3700 Forest Drive
Suite 202
Columbia, 29204
USA

Jamie Smith
Operations Manager
TAM International Inc.
980-606 Spadina Crescent East
Saskatoon, Saskatchewan S7K 3H1
Canada

Steve Hansen
Senior Compliance Engineer
TAM International Inc.
TAM International USA Inc.
333 Broadway Street
Suite 926
Paducah, KY 42001

Mike Valenzano
Director of Transport Operations
Areva - TN Inc
7135 Minstrel Way
Suite 300
Columbia, MD 21045

Ms. Karyn Wiemers
Urenco
P.O. Box 1789
Eunice, 88231
USA

Mr. Frank Hilbers
Urenco Deutschland
Urenco
Rontgenstrasse 4
Gronau, Gronau 48599
GERMANY

Mr. Rudi Valley
URENCO Netherlands
Urenco
P.O. Box 158
Almelo, Almelo 7600D AD
The NETHERLANDS

Mr. Mike Peers
URENCO UK
Urenco
Capenhurst
Chester, Chester CH1 6ER
UNITED KINGDONG

Mr. Joel Kruehler
URENCO
Urenco
Central Technology Group
Bahnhofstrasse8
Bad Bentheim, Bad Bentheim 48455
GERMANY

Mr. Florian Spielmann
Head of Supply Chain Execution
Urenco
Bahnhofstrasse 8
Bad Bentheim, Bad Bentheim 48455
GERMANY

Nicolas Guibert
Project Manager – Front End
Areva - TN Inc
7135 Minstrel Way
Suite 300
Columbia, MD 21045