U.S. Department of Transportation

Pipeline and Hazardous Materials Safety Administration

East Building, PHH-23
1200 New Jersey Ave, SE
Washington, D.C. 20590

COMPETENT AUTHORITY CERTIFICATION FOR A TYPE B(U) RADIOACTIVE MATERIALS PACKAGE DESIGN CERTIFICATE USA/0674/B(U)-96, REVISION 11

REVALIDATION OF CANADIAN COMPETENT AUTHORITY CERTIFICATE CDN/2076/B(U)-96

The Competent Authority of the United States certifies that the radioactive material package design described in this certificate satisfies the regulatory requirements for a Type B(U) package as prescribed in the regulations of the International Atomic Energy Agency[1] and the United States of America[2].

1. Package Identification - Model No. F-430/GC-40; F-430/GC-1000 and GC-3000; F-430/CIS Model IBL 437C; F-430/CIS Model IBL 637; F-430/Molsgaard Model GC-2000; and F-430/Gammator M38.

2. Package Description and Authorized Radioactive Contents - as described in Canadian Certificate of Competent Authority CDN/2076/B(U)-96, Revision 12 (attached).

3. General Conditions -

   a. Each user of this certificate must have in his possession a copy of this certificate and all documents necessary to properly prepare the package for transportation. The user shall prepare the package for shipment in accordance with the documentation and applicable regulations.

   b. Each user of this certificate, other than the original petitioner, shall register his identity in writing to the Office of Engineering and Research, (PHH-23), Pipeline and Hazardous Materials Safety Administration, U.S. Department of Transportation, Washington D.C. 20590-0001.

---

[1] "Regulations for the Safe Transport of Radioactive Material, 2012 Edition, No. SSR-6" published by the International Atomic Energy Agency (IAEA), Vienna, Austria.

[2] Title 49, Code of Federal Regulations, Parts 100-199, United States of America.

CERTIFICATE USA/0674/B(U)-96, REVISION 11

c. This certificate does not relieve any consignor or carrier from compliance with any requirement of the Government of any country through or into which the package is to be transported.

d. Records of Management System activities required by Paragraph 306 of the IAEA regulations[1] shall be maintained and made available to the authorized officials for at least three years after the last shipment authorized by this certificate. Consignors in the United States exporting shipments under this certificate shall satisfy the applicable requirements of Subpart H of 10 CFR 71.

4. Marking and Labeling - The package shall bear the marking USA/0674/B(U)-96 in addition to other required markings and labeling.

5. Expiration Date - This certificate expires on February 28, 2023. Previous editions which have not reached their expiration date may continue to be used.

This certificate is issued in accordance with paragraph(s) 810 of the IAEA Regulations and Section 173.473 of Title 49 of the Code of Federal Regulations, in response to the January 8, 2019 petition by Best Theratronics Ltd., Ottawa, Ontario, and in consideration of other information on file in this Office.

Certified By:

for William Schoonover
Associate Administrator for Hazardous Materials Safety

February 11, 2019
(DATE)

Revision 11 - Issued to revalidate Canadian Certificate of Competent Authority No. CDN/2076/B(U)-96, Revision 12.

Canadian Certificate No.: **CDN/2076/B(U)-96 (Rev. 12)**

Issue Date: **Jan-07-2019**

Expiry Date: **Feb-28-2023**

CNSC File: **30-A2-239-0**

Certificate

CDN/2076/B(U)-96 (Rev. 12)

Transport Package Design

The transport package design identified below is certified by the Canadian Nuclear Safety Commission pursuant to paragraph 21(1)(h) of the *Nuclear Safety and Control Act* and Subsection 10(1) of the *Packaging and Transport of Nuclear Substances Regulations*, 2015 and to the IAEA's *Regulations for the Safe Transport of Radioactive Material*, 2012 Edition.

REGISTRATION OF USE OF PACKAGES

All users of this authorization shall register their identity in writing with the Canadian Nuclear Safety Commission prior to the first use of this authorization and shall certify that they possess the instructions necessary for preparation of the package for shipment.

PACKAGE IDENTIFICATION

Designer:	**Best Theratronics**
Make/Model:	**F-430/GC-40, F-430/GC-1000 and GC-3000, F-430/CIS model IBL 437C, F-430/CIS model IBL 637, F-430/Molsgaard model GC-2000, F-430/Gammator M38**
Mode of Transport:	**Air, Sea, Road, Rail**

IDENTIFICATION MARK

The package shall bear the competent authority identification mark **"CDN/2076/B(U)-96".**

PACKAGE DESCRIPTION

The packaging consists of the F-430 overpack and the GC-40; IBL 437C; IBL 637; GC-1000; GC-2000; GC-3000 or Gammator M38 irradiator body. The F-430 overpack provides impact and thermal protection for the radioactive contents. Containment is provided by the sealed sources placed inside the irradiators.

The F-430 overpack is a stainless steel drum placed on a mild steel skid and consists of three layers of 12 gauge stainless steel walls with polyurethane foam between them. The cavity between the outer and middle walls is filled with 150 mm of 128 kg/m³ low density foam for impact and thermal protection. The cavity between the inner wall and the middle wall is filled with 25 mm of 640 kg/m³ high density foam to prevent direct flame exposure to the contents from the thermal test.

Four hoist rings are provided on the top surface for overhead lifting and a tie down collar is fitted to the overpack at the time of shipping.

The cabinet and the bottom part which consists of four legs and the drive system are removed from the IBL 437C during transport.

Best Theratronics drawing numbers of the packages are as follows:

GC-40: Drawing No. F643001-001, Sheet 1 of 3, (Issue P); Sheet 2 of 3, (Issue H); Sheet 3 of 3 (Issue B)
GC-1000 and GC-3000: Drawing No. F643001-002, Sheet 1 of 2 (Issue C); Sheet 2 of 2 (Issue C);
IBL 437C: Drawing No. F643001-005 (Issue B);
IBL 637: Drawing No. F643001-004 (Issue C);
GC-2000: Drawing No. F643001-003 (Issue C); and
Gammator M38: Drawing No. C102202006 (Issue A).

An illustration of the various configurations of the F-430 packages with GC-40, GC-1000, GC-3000 and IBL-437C are shown on attached Best Theratronics Drawing No. F-430, Sheets 1 of 3 to 3 of 3, (Issue 6).

Any modification to the package design must be submitted to the CNSC for approval prior to implementation.

The various configurations of the package are as follows:

F-430/GC-40:

Shape:	**Drum**	Shielding:	**Lead**
Mass:	**3175 kg**	Outer Casing:	**Stainless Steel**
Length:	**n/a**	Height:	**1270 mm**
Width:	**n/a**	Diameter:	**1270 mm**

F-430/GC-1000 and GC-3000:

Shape:	**Drum**	Shielding:	**Lead**
Mass:	**2655 kg**	Outer Casing:	**Stainless Steel**
Length:	**n/a**	Height:	**1270 mm**
Width:	**n/a**	Diameter:	**1270 mm**

F-430/CIS model IBL 437C:

Shape:	**Drum**	Shielding:	**Lead**
Mass:	**3475 kg**	Outer Casing:	**Stainless Steel**
Length:	**n/a**	Height:	**1270 mm**
Width:	**n/a**	Diameter:	**1270 mm**

F-430/CIS model IBL 637:

Shape:	**Drum**	Shielding:	**Lead**
Mass:	**3290 kg**	Outer Casing:	**Stainless Steel**
Length:	**n/a**	Height:	**1270 mm**
Width:	**n/a**	Diameter:	**1270 mm**

F-430/Molsgaard model GC-2000:

Shape:	**Drum**	Shielding:	**Lead**
Mass:	**2452 kg**	Outer Casing:	**Stainless Steel**
Length:	**n/a**	Height:	**1270 mm**
Width:	**n/a**	Diameter:	**1270 mm**

F-430/Gammator M38:

Shape:	**Drum**	Shielding:	**Lead**
Mass:	**2655 kg**	Outer Casing:	**Stainless Steel**
Length:	**n/a**	Height:	**1270 mm**
Width:	**n/a**	Diameter:	**1270 mm**

AUTHORIZED RADIOACTIVE CONTENTS

The package is authorized to contain Cesium 137 in the form of compressed cesium chloride powder pellets as follows:

(a) the F-430/GC-40 package is authorized to contain not more than 74 TBq (2000 Ci) of Cesium 137;

(b) the F-430/GC-1000; F-430/GC-3000 and F-430/Gammator M38 are each authorized to contain not more than 113 TBq (3050 Ci) of Cesium 137;

(c) the F-430/IBL 437C package is authorized to contain not more than 190 TBq (5100 Ci) of Cesium 137;

(d) the F-430/IBL 637 package is authorized to contain not more than 222 TBq (6000 Ci) of Cesium 137; and

(e) the F-430/GC-2000 package is authorized to contain not more than 66.6 TBq (1800 Ci) of Cesium 137.

The Cs-137 must be contained in either:

(a) sealed sources with a valid special form radioactive material certificate;

(b) MDS Nordion or Best Theratronics C-1001 and C-3001 sources meeting ISO 2919:2012 E65646(7) classification;

(c) MDS Nordion or Best Theratronics C-440 sources meeting ISO 2919:2012 E65646 classification;

(d) "ORNL-RAMCO-50" (Radiation Machinery Corp.) sources; or

(e) CIS Bioindustries CSL 12, CSL 15 and CSL 20 sources.

QUALITY ASSURANCE

Quality assurance for the design, manufacture, testing, documentation, use, maintenance and inspection of the package shall be in accordance with:

- Best Theratronics Document No. 5.05-QA-01, (C)*, "Radioactive Material Transport Package Quality Plan"
- Best Theratronics Technical Specification No. IN/DS 1891 F430 (6), "Design, Manufacturing and Operating Specification for the F430 Transport Package"
- Best Theratronics Document No. 5.05-QA-02, (2)*, "Sealed Source Quality Plan"
- Packaging and Transport of Nuclear Substances Regulations, 2015
- IAEA Regulations for the Safe Transport of Radioactive Material, 2012 Edition
- * or latest current revision

SHIPMENT

The preparation for shipment of the package shall be in accordance with:

- Best Theratronics Technical Specification No. IN/DS 1891 F430 (6), "Design, Manufacturing and Operating Specification for the F430 Transport Package"
- Packaging and Transport of Nuclear Substances Regulations, 2015
- IAEA Regulations for the Safe Transport of Radioactive Material, 2012 Edition

This certificate does not relieve the consignor from compliance with any requirement of the government of any country through or into which the package will be transported.

R. Garg
Designated Officer pursuant to paragraph 37(2)(a)
of the Nuclear Safety and Control Act

NOTES

Revision 9: April 17, 2012. Certificate renewed.
Revision 10: February 23, 2015. Certificate renewed.
Revision 11: June 8, 2015. Certificate amended to add ISO classification for C-1001, C-3001 and C-440 sources.
Revision 12: January 7, 2019. Certificate renewed.

Parts List

1. Overpack - Body and Skid
2. Overpack - Lid (16 Bolts, 5/8-UNC, Gr. 5, 1 Security Seal)
3. Overpack - Inner Lid (16 Bolts, 5/8-UNC, Gr. 5)
4. GC-40 Irradiator, Lower Head
5. Steel Brace, Lower Head
6. Wooden Base, Lower Head
7. GC-40 Irradiator, Upper Head
8. Steel Brace, Upper Head
9. Wooden Base, Upper Head
10. Tie-Down Collar (2 pieces)
11. Lifting Hoist Rings
12. Radiation warning and identification plates (2 sides)
13. Cesium-137 Source in storage position
14. Source Drawer (lead filled, brass encased)
15. Lead Shielding (15 cm)

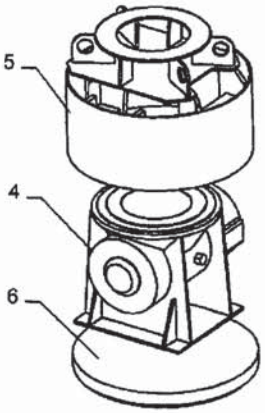

LOWER HEAD
LOADING CONFIGURATION

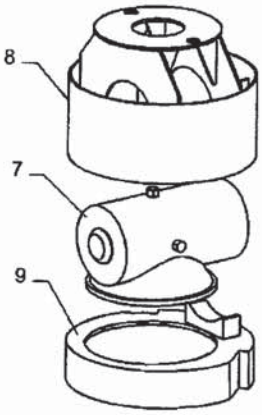

UPPER HEAD
LOADING CONFIGURATION

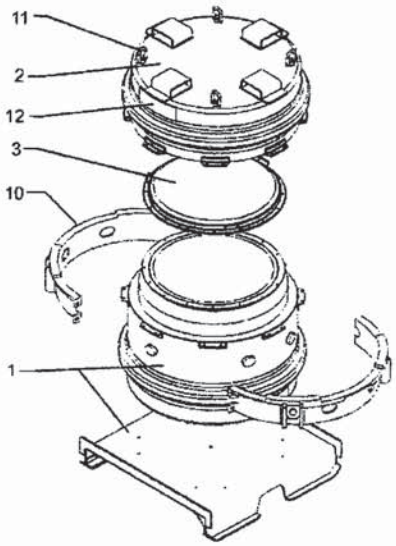

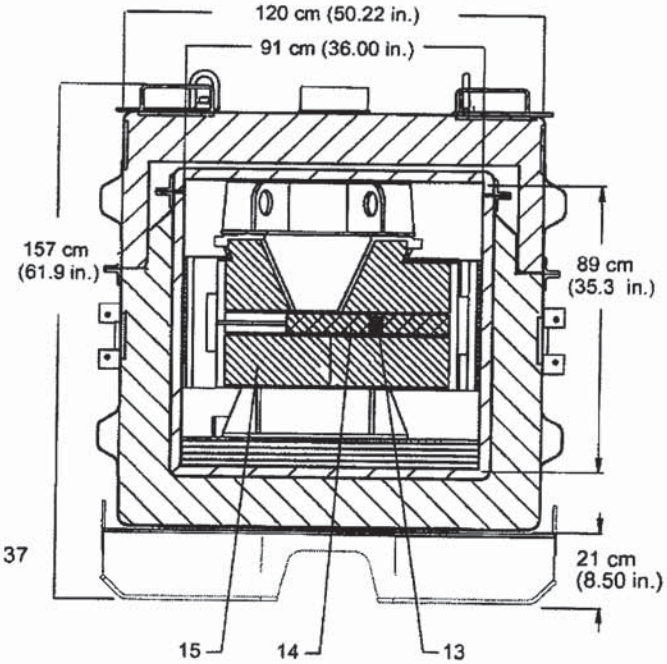

SIDE CROSS-SECTIONAL VIEW
WITH LOWER HEAD

Notes

1. Meets IAEA Type B(U)-96 requirements
2. Gross weight: 3,175 kg (7,000 lb.)
3. Floor Loading (based on projected floor area 1,815 kg/m² (372 lb./ft.²)
4. Maximum Radioactive contents: 74 TBq (2,000 Ci) of Cs-137
5. Maximum Contents weight: 1,820 kg (4,000 lb.)
6. Transport cavity size: 91 cm diameter, 90 cm high
7. Preparation for Shipment Procedure IN/PP 1611 F430

DEC 10 2010

Best® Theratronics

413 March Road
Ottawa, Ontario
Canada, K2K 0E4
Tel: (613) 591-2100

TITLE

F-430/GC40 Transport Package

REF. IN/SS 1682 F430		REVISED Dec. 10	DC30640
DATE September 2000		No. F-430	ISSUE 6
DRAWN BW	CHECKED BM	APPROVED BM	SHEET 1 OF 3

THIS DRAWING IS THE PROPERTY OF BEST THERATRONICS LTD. AND IS SUBMITTED FOR CONSIDERATION ON THE UNDERSTANDING THAT THERE SHALL BE NO EXPLOITATION OF ANY INFORMATION CONTAINED HEREIN EXCEPT WITH THE SPECIFIC WRITTEN AGREEMENT OF BEST THERATRONICS LTD.

Parts List

1. Overpack - Body
2. Overpack - Lid (16 Bolts, 5/8-UNC, Gr. 5, 1 Security Seal)
3. Overpack - Inner Lid (16 Bolts, 5/8-UNC, Gr. 5)
4. Gammacell Irradiator (GC1000 or GC3000)
5. Lower Internal Brace
6. Upper Internal Brace
7. Middle Internal Brace
8. Tie-Down Collar (2 pieces)
9. Lifting Hoist Rings (4 pieces)
10. Radiation warning and identification plates (2 sides)
11. Cesium-137 Sources
12. Lead Shielding
13. Shipping Skid

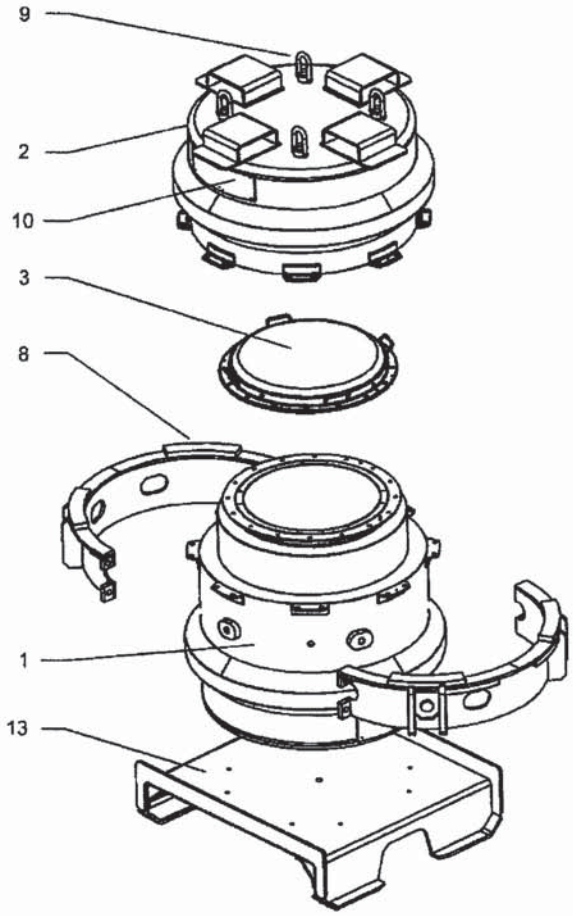

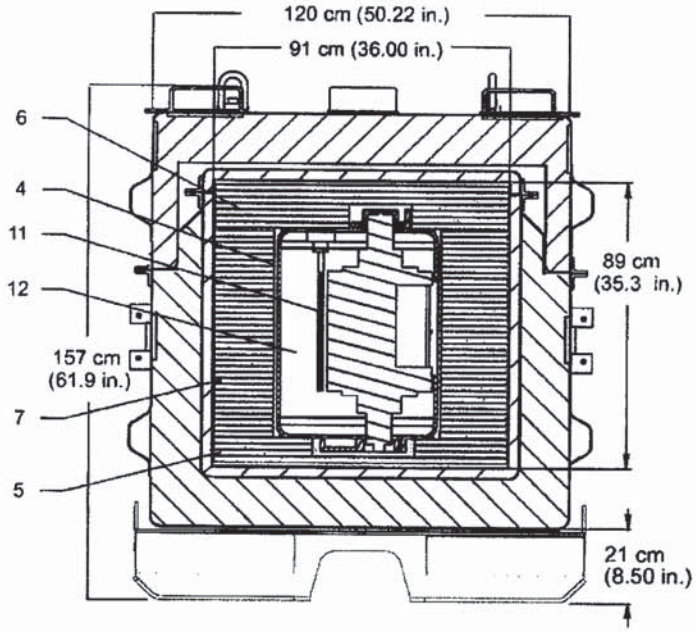

SIDE CROSS-SECTIONAL VIEW

Notes

1. Meets IAEA Type B(U)-96 requirements
2. Gross weight: 2,655 kg (5,853 lb.)
3. Floor Loading (based on projected floor area 1,517 kg/m^2 (311 lb./ft.^{2})
4. Maximum Radioactive contents: 113 TBq (3050 Ci) of Cs-137
5. Transport cavity size: 91 cm diameter, 90 cm high
6. Preparation for Shipment Procedure IN/PP 1961 F431

DEC 10 2010

Best® Theratronics

413 March Road
Ottawa, Ontario
Canada, K2K 0E4
Tel: (613) 591-2100

TITLE

F-430/GC1000 and F-430/GC3000 Transport Packages

REF. IN/SS 1682 F430		REVISED Dec. 10	DC30640
DATE September 2000		No. F-430	ISSUE 6
DRAWN BW	CHECKED BM	APPROVED BM	SHEET 2 OF 3

THIS DRAWING IS THE PROPERTY OF BEST THERATRONICS LTD. AND IS SUBMITTED FOR CONSIDERATION ON THE UNDERSTANDING THAT THERE SHALL BE NO EXPLOITATION OF ANY INFORMATION CONTAINED HEREIN EXCEPT WITH THE SPECIFIC WRITTEN AGREEMENT OF BEST THERATRONICS LTD.

Parts List

1. Overpack - Body
2. Overpack - Lid (16 Bolts, 5/8-UNC, Gr. 5, 1 Security Seal)
3. Overpack - Inner Lid (16 Bolts, 5/8-UNC, Gr. 5)
4. IBC 437 C Irradiator
5. Lower Internal Brace
6. Upper Internal Brace
7. Tie-Down Collar (2 pieces)
8. Lifting Hoist Rings (4 pieces)
9. Radiation warning and Identification plates (2 sides)
10. Cesium-137 Sources
11. Lead Shielding
12. Shipping Skid

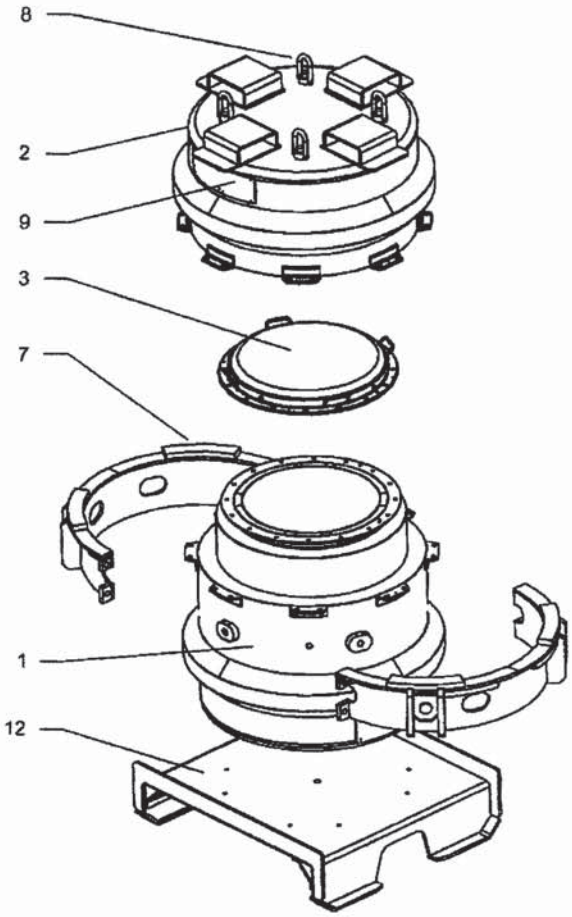

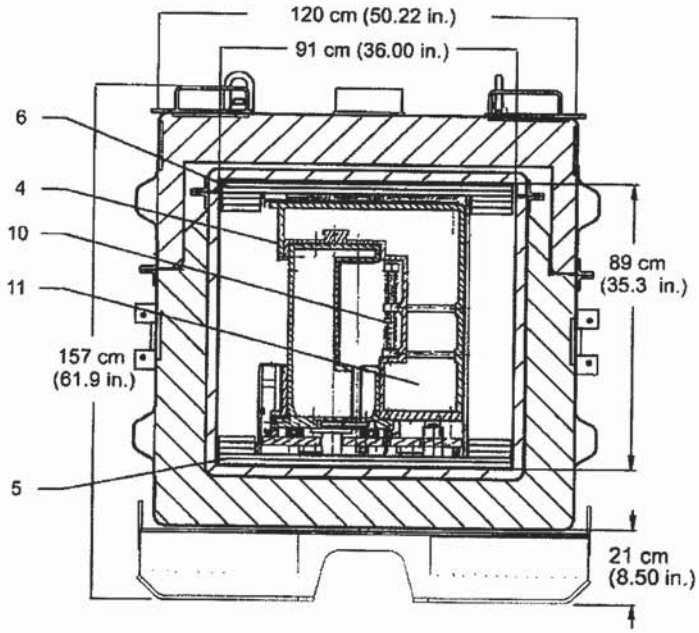

Notes

1. Meets IAEA Type B(U)-96 requirements
2. Gross weight: 3,475 kg (7,661 lb.)
3. Floor Loading (based on projected floor area 1,985 kg/m^2 (407 lb./ft.^{2})
4. Maximum Radioactive contents: 190 TBq (5100 Ci) of Cs-137
5. Transport cavity size: 91 cm diameter, 90 cm high
6. Preparation for Shipment Procedure IN/PP 2346 F430

DEC 10 2010

Best® Theratronics

413 March Road
Ottawa, Ontario
Canada, K2K 0E4
Tel: (613) 591-2100

TITLE

F-430/IBL 437 C Transport Package

REF. IN/SS 1682 F430		REVISED Dec. 10	DC30640
DATE September 2000		No. F-430	ISSUE 6
DRAWN BW	CHECKED BM	APPROVED BM	SHEET 3 OF 3

THIS DRAWING IS THE PROPERTY OF BEST THERATRONICS LTD. AND IS SUBMITTED FOR CONSIDERATION ON THE UNDERSTANDING THAT THERE SHALL BE NO EXPLOITATION OF ANY INFORMATION CONTAINED HEREIN EXCEPT WITH THE SPECIFIC WRITTEN AGREEMENT OF BEST THERATRONICS LTD.

U.S. Department of
Transportation

**Pipeline and
Hazardous Materials
Safety Administration**

**East Building, PHH-23
1200 New Jersey Ave, SE
Washington, D.C. 20590**

CERTIFICATE NUMBER: USA/0674/B(U)-96

ORIGINAL REGISTRANT(S):

Best Theratronics Ltd.
413 March Road
Ottawa, Ontario, K2K 0E4
Canada