U.S. Department
of Transportation

**Pipeline and
Hazardous Materials
Safety Administration**

**East Building, PHH-23
1200 New Jersey Avenue Southeast
Washington, D.C. 20590**

**COMPETENT AUTHORITY CERTIFICATION
FOR A TYPE B(U)
RADIOACTIVE MATERIALS PACKAGE DESIGN
CERTIFICATE USA/0555/B(U)-96, REVISION 5**

**REVALIDATION OF ARGENTINIAN COMPETENT AUTHORITY
CERTIFICATE RA/00074/B(U)-96**

This certifies that the radioactive material package design described is hereby approved for use within the United States for import and export shipments only. Shipments must be made in accordance with the applicable regulations of the International Atomic Energy Agency[1] and the United States of America[2].

1. Package Identification - CONTRAS, Serial Numbers: 01,02,03 and 04.

2. Package Description and Authorized Radioactive Contents - as described in Argentine Certificate of Competent Authority RA/00074/B(U)-96, Revision 7 (attached).

3. General Conditions -

   a. Each user of this certificate must have in his possession a copy of this certificate and all documents necessary to properly prepare the package for transportation. The user shall prepare the package for shipment in accordance with the documentation and applicable regulations.

   b. Each user of this certificate, other than the original petitioner, shall register his identity in writing to the Office of Hazardous Materials Technology, (PHH-23), Pipeline and Hazardous Materials Safety Administration, U.S. Department of Transportation, Washington D.C. 20590-0001.

   c. This certificate does not relieve any consignor or carrier from compliance with any requirement of the Government of any country through or into which the package is to be transported.

---

[1] "Regulations for the Safe Transport of Radioactive Material, 1996 Edition (Revised), No. TS-R-1 (ST-1, Revised)," published by the International Atomic Energy Agency(IAEA), Vienna, Austria.

[2] Title 49, Code of Federal Regulations, Parts 100-199, United States of America.

CERTIFICATE USA/0555/B(U)-96, REVISION 5

d. Records of Quality Assurance activities required by Paragraph 310 of the IAEA regulations[1] shall be maintained and made available to the authorized officials for at least three years after the last shipment authorized by this certificate. Consignors in the United States exporting shipments under this certificate shall satisfy the applicable requirements of Subpart H of 10 CFR 71.

4. Marking and Labeling - The package shall bear the marking USA/0555/B(U)-96 in addition to other required markings and labeling.

5. Expiration Date - This certificate expires on December 01, 2021.

This certificate is issued in accordance with paragraph 808 of the IAEA Regulations and Section 173.473 of Title 49 of the Code of Federal Regulations, in response to the February 03, 2017 petition by Edlow International Company, Washington, DC, and in consideration of other information on file in this Office.

Certified By:

Feb 21 2017

William Schoonover (DATE)
Acting Associate Administrator for Hazardous Materials Safety

Revision 5 - Issued to revalidate Argentina Certificate of Competent Authority RA/0074/B(U)-96, Revision 7, and to extend the expiration date.

ARN Nº 3500/16

The Nuclear Regulatory Authority (Autoridad Regulatoria Nuclear)
Under The Authority of the National President's Office

COMPETENT AUTHORITY'S APPROVAL CERTIFICATE
FOR THE DESIGN OF THE B(U)-TYPE PACKAGE MODEL CONTRAS
RA/0074/B(U)-96 (Revision 7)

It is hereby certified that the model CONTRAS, described in the next paragraphs, complies with the regulatory requirements related to B(U)-Type Packages as set forth by AR 10.16.1 Standard, "Transportation of Radioactive Materials", Revision 3[(1)] issued by the Nuclear Regulatory Authority of the Republic of Argentina, for their being transported by sea, land, and air.

1. COMPETENT AUTHORITY'S IDENTIFICATION MARK: **RA/0074/B(U)-96**

2. CERTIFICATE EFFECTIVENESS: from **December 2, 2016 to December 1, 2021**

3. PACKAGE IDENTIFICATION:
Model: **CONTRAS**. Series Numbers: **01, 02, 03, and 04**

4. PACKAGING DESCRIPTION:
The packaging consists of a main body and a protecting covering. The main body is made in sleeved lead, within an AISI 304 steel structure. Inside, it has two circular channels with a steel/lead cover. The source- holder and the source itself are fitted in one of the channels and a lead shield is fitted in the other channel. The protecting covering is made in AISI 304 0.6 mm-thick steel, with a Fiberfrax 25 mm-thick insulation. Its approximate external dimensions are as follows: 1.040 m x 1.040 m side and 1.167 m high. The gross mass is of 2,300 kg. See graph attached hereto, in Annex 1.

5. AUTHORIZED RADIOACTIVE CONTENTS:
The package design is authorized for transporting up to 555 TBq of cobalt 60 in sealed capsules as radioactive material in special form, approved under AR 10.16.1 Standard.

6. SHIPPING, TRANSPORTATION, AND MAINTENANCE CONDITIONS
The package should be inspected and maintained according to the Inspection and Maintenance Manual for CONTRAS Model Package, DOC. No. 0756-2010-3MOMC-003-C, and pursuant to AR 10.16.1 Standard.

The package should be prepared for its being transported according to the Operation Manual for CONTRAS Model Package, DOC. No. 0756- 2010-3MOMC-002-D, and pursuant to AR 10.16.1 Standard.

The sender should give the Nuclear Regulatory Authority notice of any event or accident that might take place throughout the transportation.

Each package shall bear two labels of the appropriate category and shall be marked-up in a legible and permanent way with the pertinent marks, including the "RA/0074/B(U)-96"

[(1)] "Regulations for the Safe Transport of Radioactive Materials", 2012 Edition, Specific Safety Requirements No. SSR-6, issued by the International Atomic Energy Agency (IAEA).

identification mark, on its external surface.

The sender should furnish the carrier with the special instructions to follow. The carrier shall be appropriately acquainted with the instructions to follow in emergency cases, and shall have Intervention file No. 127, as set forth in the applicable regulations, on board its vehicle. Land vehicles should bear the labels set forth in AR 10.16.1 Standard, "Transportation of Radioactive Materials", Revision 3, issued by the Nuclear Regulatory Authority.

7. MANAGEMENT SYSTEM

The package design and the packaging manufacture have been performed according to "INVAP S.E.'S Quality Management Manual" and other pertinent documentation.

8. This certificate does not exempt either the sender or the carrier from complying with any requirement set forth by the Government of any country from, through, or to which the package may be transported.

9. This certificate is issued bearing in mind AR 10.16.1 Standard, "Transportation of Radioactive Materials", Revision 3, and as requested by INVAP S.E.

NOTE: Revision 7 modifies revision 6 as far as issue and expiration dates, and compliance with the new revision of the applicable standards, are concerned.
Revision 6 modifies revision 5 as far as issue and expiration dates, and compliance with the new revision of the applicable standards are concerned.

Call System of Intervention in Radiological Emergencies

(Sky Tel) TEL. 4597-9000 mentioning PIN number 1110886

CERTIFIED BY: SIGNATURE AND NAME: Néstor Alejandro Masriera, Engineer. Chairman to the Board of Directors.

DATE: June 13, 2016.

NUCLEAR REGULATORY AUTHORITY (AUTORIDAD REGULATORIA NUCLEAR (ARN)).
Av. Del Libertador 8250 - (1429) - Buenos Aires - Republic of Argentina.
TEL.: (54 11) 6323-1722/1708. FAX: (54 11) 6323-1771/1798

ANNEX 1

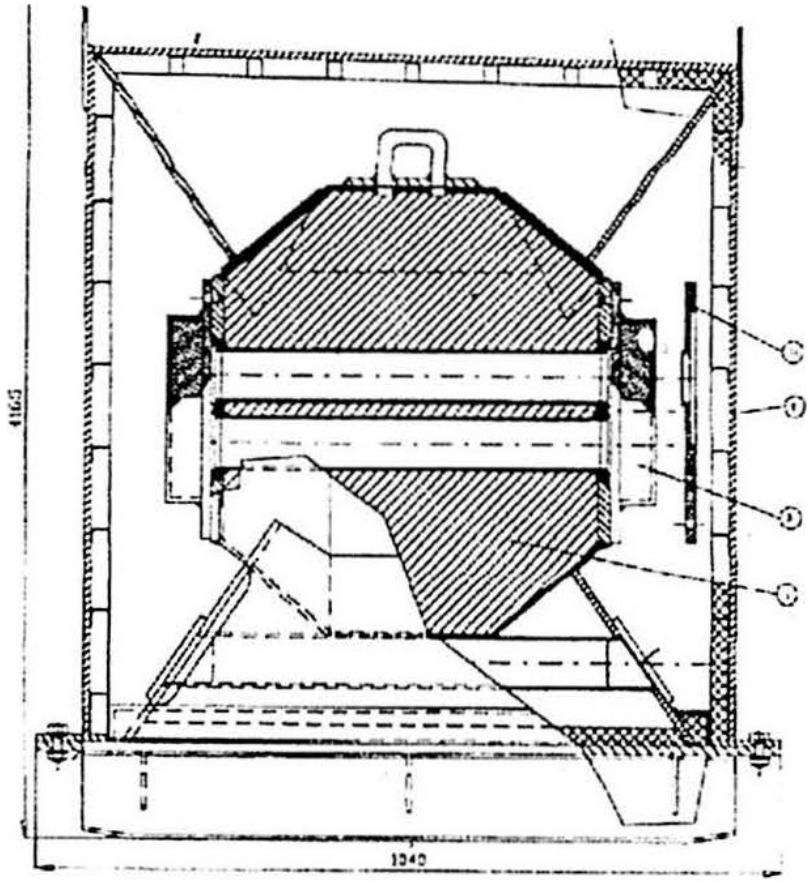

SIDE VIEW FIGURE 5

11. FITTING FLANGE (STAINLESS STEEL)

3. SHIELDED COVERS (STAINLESS STEEL/LEAD)

2. PROTECTIVE COVERING (STAINLESS STEEL / “FIBERFRAX” THERMAL INSULATION)

1. MAIN BODY (STAINLESS STEEL / LEAD / CARBON STEEL BASE)

INVAP S.E.

ARN N° 3500 /16

Autoridad Regulatoria Nuclear
DEPENDIENTE DE LA PRESIDENCIA DE LA NACION

CERTIFICADO DE APROBACION DE LA AUTORIDAD COMPETENTE DE DISEÑO DE BULTO DEL TIPO B(U) MODELO CONTRAS

RA/0074/B(U)-96 (Revisión 7)

El presente certifica que el modelo CONTRAS, tal como se describe en los párrafos siguientes, cumple con los requisitos correspondientes a Bultos del Tipo B(U) establecidos en la Norma AR 10.16.1 "Transporte de materiales radiactivos", Revisión 3[1], de la Autoridad Regulatoria Nuclear de Argentina, para su transporte por vía terrestre, aérea y acuática.

1. *MARCA DE IDENTIFICACION DE LA AUTORIDAD COMPETENTE*

RA/0074/B(U)-96

2. *VIGENCIA DEL CERTIFICADO:*

Desde: **2 de diciembre de 2016** hasta: **1 de diciembre de 2021**

JUAN JOSE LEZICA
ESCRIBANO
Mat. 4980

3. *IDENTIFICACION DEL EMBALAJE:*

Modelo: **CONTRAS**. Números de Serie: **01, 02, 03 y 04**.

4. *DESCRIPCION DEL EMBALAJE:*

El embalaje está compuesto por un cuerpo principal y una cubierta protectora. El cuerpo principal está construido de plomo encamisado en una estructura de acero AISI 304. En su interior posee dos canales circulares, con tapa de acero y plomo, ubicándose en uno el porta fuente con la fuente y en el otro un blindaje de plomo. La cubierta protectora está formada por acero AISI 304 de 0,6 mm de espesor y una aislación de Fiberfrax de 25 mm de espesor. Las dimensiones externas aproximadas son: 1,040 m x 1,040 m de lado y 1,167 m de altura. La masa aproximada es de 2.300 kg. Véase el esquema en Apéndice 1.

5. *CONTENIDO RADIACTIVO AUTORIZADO:*

El diseño del bulto se autoriza para transportar hasta 555 TBq de cobalto 60 en cápsulas selladas como material radiactivo en forma especial, aprobado de acuerdo a la Norma AR 10.16.1.

6. *CONDICIONES DE EXPEDICION, TRANSPORTE Y MANTENIMIENTO*

El bulto debe ser inspeccionado y mantenido de acuerdo al "Manual de Inspección y Mantenimiento del Modelo de Bulto CONTRAS", DOC. Nº 0756-2010-3MOMC-003-C, y a la Norma AR 10.16.1.

El bulto debe ser preparado para su transporte de acuerdo al "Manual de Operación del Modelo de Bulto CONTRAS, DOC. Nº 0756-2010-3MOMC-002-D, y a la Norma AR 10.16.1.

El remitente comunicará a la Autoridad Regulatoria Nuclear cualquier incidente o accidente que ocurriere durante el transporte.

Cada bulto llevará, cuando aplique, dos etiquetas de la categoría que corresponda y estará marcado en forma legible y durable con la marcas pertinentes, incluyendo la marca de identificación "RA/0074/B(U)-96", en la superficie exterior del mismo.

El remitente deberá suministrar al transportista las instrucciones especiales a seguir. El transportista tendrá un conocimiento adecuado de las instrucciones a seguir en casos de

[1] Coincidente con el "Reglamento para el transporte seguro de materiales radiactivos", Edición de 2012, Requisitos de Seguridad Específicos Nº SSR-6 del Organismo Internacional de Energía Atómica (OIEA).

TRADUCTORA
INGLÉS
Mat. T° VII - F° 46
Inscripción C.T.P.C.

emergencia y portará la Ficha de Intervención N° 127 que figura en la reglamentación vigente. El vehículo de carretera llevará, cuando sorresponda, los rótulos estipulados en la norma AR 10.16.1 "Transporte de materiales radiactivos", Revisión 3, de la Autoridad Regulatoria Nuclear.

7. *SISTEMA DE GESTIÓN:*

El diseño del bulto y la fabricación de los embalajes se han llevado a cabo de acuerdo al "Manual del Sistema de Gestión de la Calidad de INVAP S.E." y la demás documentación pertinente.

8. El presente certificado, no exime al remitente ni al transportista del cumplimiento de cualquier requisito impuesto por el Gobierno de cualquier país a través del cual o al cual se transporte el bulto.

9. Este certificado se emite teniendo en cuenta la Norma AR 10.16.1 "Transporte de materiales radiactivos", Revisión 3 y en respuesta al pedido formulado por INVAP S.E..

NOTA: La revisión 7 modifica a la revisión 6 en lo atinente a las fechas de emisión y expiración, y al cumplimiento con la nueva revisión de la normativa vigente.
La revisión 6 modifica a la revisión 5 en lo atinente a las fechas de emisión y expiración, y al cumplimiento con la nueva revisión de la normativa vigente.

Sistema de Intervención en Emergencias Radiológicas
(Sky Tel) TE 4597-9000 mencionando número de PIN 1110886

CERTIFICADO POR:

Ing. Néstor Alejandro MASRIERA
Presidente del Directorio

FIRMA Y ACLARACIÓN

13 JUN 2016

FECHA

AUTORIDAD REGULATORIA NUCLEAR (ARN)
Av. Del Libertador 8250- (1429) Buenos Aires
República Argentina
Te: (54 11) 6323-1708
transporte@arn.gob.ar

UBLICA
. Cap. Fed.
B.A. N 1562

APENDICE 1

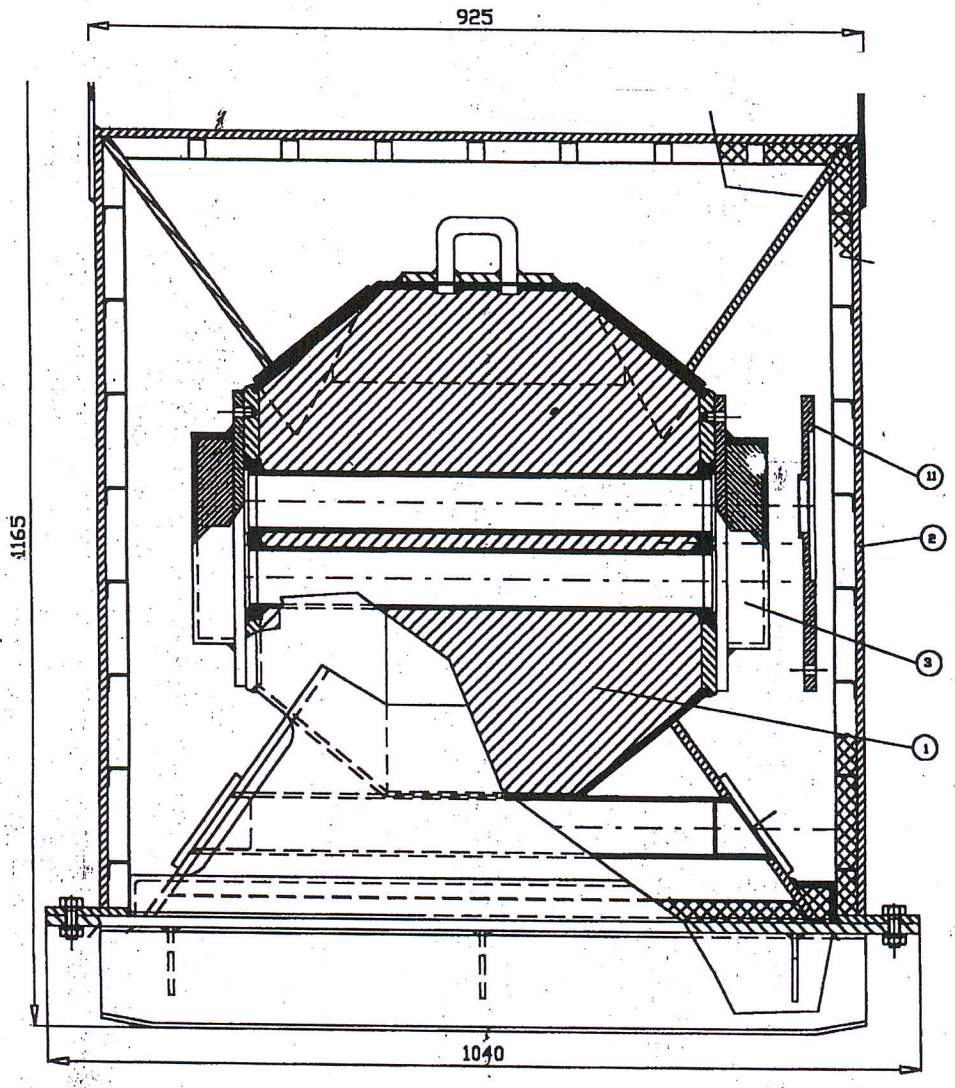

VISTA LATERAL FIG.5

11	BRIDA DE ADAPTACION	(ACERO INOX.)
3	TAPAS BLINDADAS	(ACERO INOX. /PLOMO)
2	CUBIERTA PROTECTORA	(ACERO INOX. /AISLACION TERMICA "FIBERFRAX")
1	CUERPO PRINCIPAL	(ACERO INOX. /PLOMO /BASE ACERO CARBONO))

INVAP S.E.

U.S. Department
of Transportation

**Pipeline and
Hazardous Materials
Safety Administration**

**East Building, PHH-23
1200 New Jersey Avenue SE
Washington, D.C. 20590**

CERTIFICATE NUMBER: USA/0555/B(U)-96, Revision 5

ORIGINAL REGISTRANT(S):

Ms. Franchone Oshinowo
Vice President of Operations
Edlow International Company
1666 Connecticut Ave, N.W.
Suite 201
Washington, 20009
USA

Ms. Marilena Conde
Vice President, Marketing and Administration
Edlow International Company
1666 Connecticut Ave, N.W
Suite 201
Washington, 20009
USA