U.S. Department of Transportation

Pipeline and Hazardous Materials Safety Administration

East Building, PHH-23
1200 New Jersey Ave, SE
Washington, D.C. 20590

**COMPETENT AUTHORITY CERTIFICATION FOR A TYPE B(U) RADIOACTIVE MATERIALS PACKAGE DESIGN CERTIFICATE USA/0509/B(U)-96, REVISION 12**

**REVALIDATION OF CANADIAN COMPETENT AUTHORITY CERTIFICATE CDN/2072/B(U)-96**

The Competent Authority of the United States certifies that the radioactive material package design described in this certificate satisfies the regulatory requirements for a Type B(U) package as prescribed in the regulations of the International Atomic Energy Agency[1] and the United States of America[2] The package design is approved for use within the United States for import and export shipments made in accordance with applicable international and domestic transport regulations.

1. Package Identification - F-127, F-127-X, F-127-S, and RAI/F-127 Transport Packages, Serial Numbers 59 and up.

2. Package Description and Authorized Radioactive Contents - as described in Canadian Certificate of Competent Authority CDN/2072/B(U)-96, 12 (attached).

3. General Conditions -

   a. Each user of this certificate must have in his possession a copy of this certificate and all documents necessary to properly prepare the package for transportation. The user shall prepare the package for shipment in accordance with the documentation and applicable regulations.

   b. Each user of this certificate, other than the original petitioner, shall register his identity in writing to the Office of Engineering and Research, (PHH-23), Pipeline and Hazardous Materials Safety Administration, U.S. Department of Transportation, Washington D.C. 20590-0001.

---

[1] "Regulations for the Safe Transport of Radioactive Material, 2012 Edition, No. SSR-6" published by the International Atomic Energy Agency (IAEA), Vienna, Austria.

[2] Title 49, Code of Federal Regulations, Parts 100-199, United States of America.

**CERTIFICATE USA/0509/B(U)-96, REVISION 12**

c. This certificate does not relieve any consignor or carrier from compliance with any requirement of the Government of any country through or into which the package is to be transported.

d. Records of Management System activities required by Paragraph 306 of the IAEA regulations[1] shall be maintained and made available to the authorized officials for at least three years after the last shipment authorized by this certificate. Consignors in the United States exporting shipments under this certificate shall satisfy the applicable requirements of Subpart H of 10 CFR 71.

4. Marking and Labeling - The package shall bear the marking USA/0509/B(U)-96 in addition to other required markings and labeling.

5. Expiration Date - This certificate expires on April 30, 2025. Previous editions which have not reached their expiration date may continue to be used.

This certificate is issued in accordance with paragraph(s) 810 of the IAEA Regulations and Section 173.473 of Title 49 of the Code of Federal Regulations, in response to the January 6, 2021 petition by Nordion (Canada) Inc., Ottawa, Ontario, and in consideration of other information on file in this Office.

Certified By:

for William Schoonover
Associate Administrator for Hazardous Materials Safety

January 26, 2021
(DATE)

Revision 12 - Issued to revalidate Canadian Certificate of Approval No. CDN/2072/B(U)-96, Revision 12.

Canadian Certificate No.: **CDN/2072/B(U)-96 (Rev. 12)**
Issue Date: **Dec-18-2020**
Expiry Date: **Apr-30-2025**
CNSC File: **30-A2-99-0**

# Certificate

## CDN/2072/B(U)-96 (Rev. 12)

## Transport Package Design

The transport package design identified below is certified by the Canadian Nuclear Safety Commission pursuant to paragraph 21(1)(h) of the *Nuclear Safety and Control Act* and Subsection 10(1) of the *Packaging and Transport of Nuclear Substances Regulations*, 2015 and to the IAEA's *Regulations for the Safe Transport of Radioactive Material*, 2012 Edition.

## REGISTRATION OF USE OF PACKAGES

All users of this authorization shall register their identity in writing with the Canadian Nuclear Safety Commission prior to the first use of this authorization and shall certify that they possess the instructions necessary for preparation of the package for shipment.

## PACKAGE IDENTIFICATION

| | |
|---|---|
| Designer: | **Nordion (Canada) Inc.** |
| Make/Model: | **F-127, F-127-X, F-127-S and RAI/F-127 Transport Packages, Serial Nos. 59 and up** |
| Mode of Transport: | **Air, Sea, Road, Rail** |

## IDENTIFICATION MARK

The package shall bear the competent authority identification mark **"CDN/2072/B(U)-96".**

## PACKAGE DESCRIPTION

The F-127, F-127-X, F-127-S and RAI/F-127 transport packages as shown on Nordion Drawing Nos. F112701-003 (Issue A), F112701-001 (Issue M), F112701-004 (Issue A) and F112701-005 (Issue A), are finned cylindrical steel-encased-lead container assemblies with cylindrical fire shield, top shield cap and bottom shipping skid. The container assembly has a removable, lead-filled steel plug. Vent and drain lines are blocked either permanently or with removable cable assemblies. The containment system consists of either the authorized sealed sources or the F-407 leak-proof insert, and the container assembly.

The F-127-X is identical to the F-127 design, except that the F-127-X has its vent and drain lines permanently sealed with a welded plug. The RAI/F-127 differs from the F-127 design in that it uses a different plug design. The plug does not have a flange that connects to the package body. The F-127-S is identical to the F-127 except for the plug design, which is shorter for the F-127-S. The gap under the short plug and the ledge at the bottom of the plug cavity must be filled with the tungsten shielding plates, the source carrier and stainless steel gap filler plates as necessary.

An illustration of the package is shown on attached Drawing Nos. F-127(1996) Issue 3 (IN/SS 1863 F127-96), F-127-X(1996) Issue 3 (IN/SS 1864 F127X-96), F-127-S (1996) Issue A (F512701-001) and RAI/F-127(1996) Issue 3 (IN/SS 1865 RAI/F127-96).

Any modification to the package design must be submitted to the CNSC for approval prior to implementation.

The configuration of the package is as follows:

| | | | |
|---|---|---|---|
| Shape: | **Cylinder** | Shielding: | **Lead** |
| Mass: | **3580 kg** | Outer Casing: | **Steel** |
| Length: | **800 mm** | Height: | **1240 mm** |
| Width: | **1020 mm** | Diameter: | **n/a** |

## AUTHORIZED RADIOACTIVE CONTENTS

The F-127 and F-127-X are authorized to contain not more than:

a) 2,200 TBq (60,000 Ci) of cobalt-60 in the form of metal pellets or nickel-plated slugs in the following capsules, retained within a holder that distributes them throughout the cavity volume:

   i) Capsule models C-132, C-133, C-140, C-146, C-151, C-164, C-174A, C-174B, C-177, C-185, AC-191, AC-195, C-196, C-198, C-199, C-200, C-205, C-215, C-230, TC-239, C-252, XC-310, XC-318, C-320, XC-325, XC-330, AC-339, C-375, C-446 and C-450; or

   ii) welded stainless steel capsules that meet the requirements of ISO 2919:2012 under classification number E53424; or

   iii) capsules with valid special form radioactive material certificates; or

b) 185 TBq (5,000 Ci) of carbon-14 in the form of activated aluminum nitride pellets contained within an aluminum capsule and further contained within a sealed Nordion model F-407 insert; or

c) 3,700 TBq (100,000 Ci) of cesium-137 contained in capsules with a valid special form radioactive material certificate.

The RAI/F-127 is authorized to contain not more than 2,200 TBq (60,000 Ci) of cobalt-60 in the form of metal pellets or nickel-plated slugs in the Nordion model C-132 or C-198 capsule.

The F-127-S is authorized to contain cobalt-60 in the form of metal pellets or nickel-plated slugs in the following capsules, retained within a holder that distributes them throughout the cavity volume:

   i) capsule models C-132, C-133, C-146, C-177, C-198, TC-239, C-375, C-446 and C-450; or

   ii) welded stainless steel capsules that meet the requirements of ISO 2919:2012 under classification number E53424; or

   iii) capsules with valid special form radioactive material certificates.

The F-127-S is authorized to contain cobalt-60, the maximum authorized activity of which will depend on the number of tungsten shielding plates (Nordion Drawing No. F112702-053 Issue C) bolted to the bottom of the plug, and is limited as follows:

i) 2,220 TBq (60,000 Ci) with three tungsten shielding plates; or

ii) 1,110 TBq (30,000 Ci) with two tungsten shielding plates; or

iii) 555 TBq (15,000 Ci) with one tungsten shielding plate; or

iv) 228 TBq (7,500 Ci) with no tungsten shielding plates.

## MANAGEMENT SYSTEM

The management system for the design, manufacture, testing, documentation, use, maintenance and inspection of the package shall be in accordance with:

- Nordion Document No. IN/QA 0224 Z000 (Rev. 12)*, "Radioactive Material Transport Package Quality Plan"
- Nordion Document No. IN/DS 1861 F127 (Rev. 6), "Design, Manufacturing and Operating Specification for F-127 Family of Transport Packages"
- Packaging and Transport of Nuclear Substances Regulations, 2015
- * or latest current revision

## SHIPMENT

The preparation for shipment of the package shall be in accordance with:

- Nordion document No. IN/DS 1861 F127 (Rev. 6), "Design, Manufacturing and Operating Specification for F-127 Family of Transport Packages"
- Best Theratronics Limited Document No. IN/PP 2840 F127 (Rev. A), "Preparation for Shipment of the F-127 and F-127-X Transport Packaging for Cesium-137 Sealed Sources"
- Packaging and Transport of Nuclear Substances Regulations, 2015
- Air transport is restricted to a maximum of 960 TBq of cobalt-60 to meet the temperature requirement of Paragraph 619 of the IAEA Regulations, 2018 Edition.

For heat fluxes exceeding 15 W/m², supplementary arrangements must be made with the carrier to ensure adequate heat dissipation.

This certificate does not relieve the consignor from compliance with any requirement of the government of any country through or into which the package will be transported.

R. Garg
Designated Officer pursuant to paragraph 37(2)(a) of the Nuclear Safety and Control Act

**NOTES**

Revision 8: November 13, 2014. Certificate amended. Cesium 137 added to contents.
Revision 9: January 28, 2016. Certificate renewed.
Revision 10: April 23, 2019. Certificate amended to add model F-127-S.
Revision 11: January 29, 2020. Certificate renewed.
Revision 12: December 18, 2020. Certificate amended to reflect the revised drawing for the shielding plates used in the F-127-S configuration.

## Parts List

1. Shield Cap with Neoprene Gasket
2. ½ — 13 UNC x ¾ in. lg Hex Bolt (1)
3. ½ — 13 UNC x 1 ¼ in. lg Hex Bolt (4)
4. ½ — 13 UNC x 11/16 in. lg Socket HD (4) to Retain Fireshield
5. Radiation Caution Plate (2)
6. MDS Nordion Identification Plate (2)
7. Removable Fireshield
8. Removable Skid
9. Skid Bolts: 1 — 8 UNC x 3 in. lg Hex HD (8)
10. Neoprene Gasket for Plug Assembly
11. Stainless Steel Plug Bolts: ¾ — 10 UNC x 1 ½ in. lg Hex HD (9)
12. Wire Seal
13. Stainless Steel Pipe Plug
14. Plug Lift Lug
15. Vent Tube
16. Plug Assembly
17. Removable Insert
18. Spacer Plates (2) - Type I - Removable
19. Spacer Plates (1) - Type II - Removable
20. Cavity - without 3 Spacer Plates 163 mm Dia x 348 mm (6.4 x 13.7 in.)
    With 3 Spacer Plates 163 mm Dia x 320 mm (6.4 x 12.6 in.)
21. Drain Tube
22. Lead Shielding
23. Vermiculite
24. Transite or equivalent: 25 mm (1 in.) thick
25. Cap Brackets (4): ½ — 13 UNC x 1 ¾ in. Bolts and Nuts
26. Fireshield Brackets (4): 1 — 8 UNC x 2 ½ in. Bolts and Nuts
27. Warning Plate
28. Ventline Safety Cable Assembly
29. Stainless Steel Wire Brush
30. Storage Plaque (Heat Emitter) (2)
31. Fireshield Brackets (2): ¾ — 10 UNC x 2 ½ in. Bolts and Nuts
32. Category Label (2): on opposite sides of container
33. UN Number Labels (2): one next to each of the two radioactive category labels

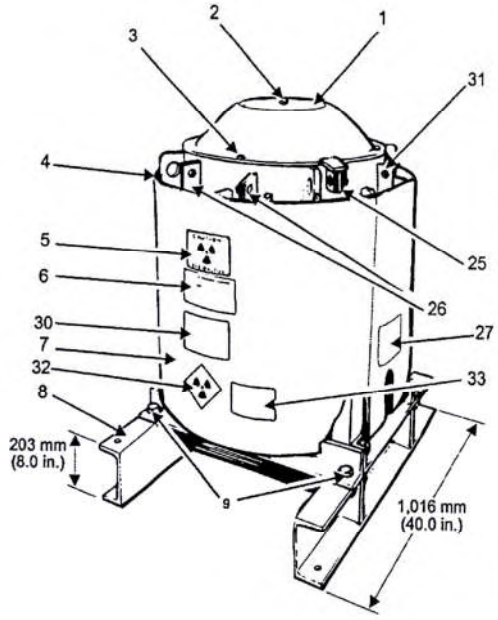


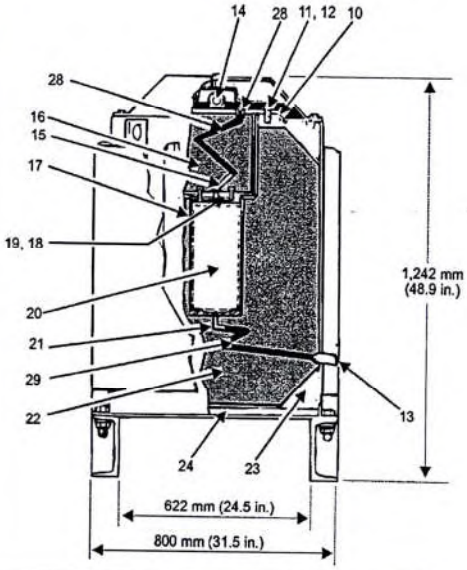


## Notes

1. CNSC Certificate CDN/2072/B(U)-96
2. Meets IAEA Type B(U) Requirements
3. Steel Encased Lead Shielding: 254 mm (10 in.)
4. Gross Weight: 3,580 kg (7,900 lb.)
   Plug Weight: 147 kg (325 lb.)
5. Projected Floor Loading: 4,405 kg/m² (905 lb./ft.²)
6. Inserts Available:
   - F-128: Bucket
   - F-180: Cage for 64 Sealed Sources
   - F-216: Carrier for 8 Bulk Capsules
   - F-407: Leakproof insert for C-14
   - F-415: Bucket
7. Authorized contents: 1) 2,220 TBq (60,000 Ci) cobalt-60
   2) 185 TBq (5,000 Ci) carbon-14
8. For F-127 Serial Numbers 59 and up.


**MDS Nordion**

*447 March Road, P.O. Box 13500*
*Kanata, Ontario, Canada, K2K 1X8*
*Tel: (613) 592-2790 · Fax. (613) 592-6937*



THIS DRAWING IS THE PROPERTY OF MDS NORDION INC. AND IS SUBMITTED FOR CONSIDERATION ON THE UNDERSTANDING THAT THERE SHALL BE NO EXPLOITATION OF ANY INFORMATION CONTAINED HEREIN EXCEPT WITH THE SPECIFIC WRITTEN AGREEMENT OF MDS NORDION INC.


TITLE

# F-127 Transport Packaging (To IAEA 1996 Transport Regulations)

| | | | |
|---|---|---|---|
| REF. IN/SS 1863 F127-96 F101102-A06024 | | REVISED Nov03 | DCN A2902-D-01A |
| DATE JUNE 2002 | | No. F-127(1996) | ISSUE 3 |
| DRAWN JC | CHECKED JR | APPROVED MK | SHEET 1 OF 1 |

Parts List

1. Shield Cap with Neoprene Gasket
2. 1/2-13 UNC x 3/4 inch long Hex Bolt (1)
3. 1/2-13 UNC x 1-1/4 inch long Hex Bolt (4)
4. 1/2-13 UNC x 5/8 inch long Socket HD (4) to Retain Fireshield
5. Radiation Caution Plate (2)
6. Nordion Identification Plate (2)
7. Removable Fireshield
8. Removable Skid
9. Skid Bolts: 1-8 UNC x 3 inch long Hex HD (8)
10. Neoprene Gasket for Plug Assembly
11. Stainless Steel Plug Bolts: 3/4-10 UNC x 1-1/2 inch long Hex HD (9)
12. Wire Seal
13. Stainless Steel Pipe Plug
14. Plug Lift Lug
15. Vent Tube
16. Plug Assembly
17. Cavity: Diameter 163 mm (6.4 inch). (See Note 6 for depth.)
18. Tungsten Shield Plates (See Note 7.)
19. Stainless Steel Gap Filler Disk (See Note 8.)
20. Source Carrier
21. Drain Tube
22. Lead Shielding
23. Vermiculite
24. Transite or equivalent: 25 mm (1 inch) thick
25. Cap Brackets (4): 1/2-13 UNC x 2.0 inch Bolts and Nuts
26. Fireshield Brackets (4): 1-8 UNC x 2-3/4 inch Bolts and Nuts
27. Warning Plate
28. Ventline Safety Cable Assembly
29. Stainless Steel Wire Brush
30. Storage Plaque (Heat Emitter) (2)
31. Fireshield Brackets (2): 3/4-10 UNC x 2-1/2 inch Bolts and Nuts
32. Category Label (2): on opposite sides of container
33. UN Number Labels (2): one next to each of the two radioactive category labels

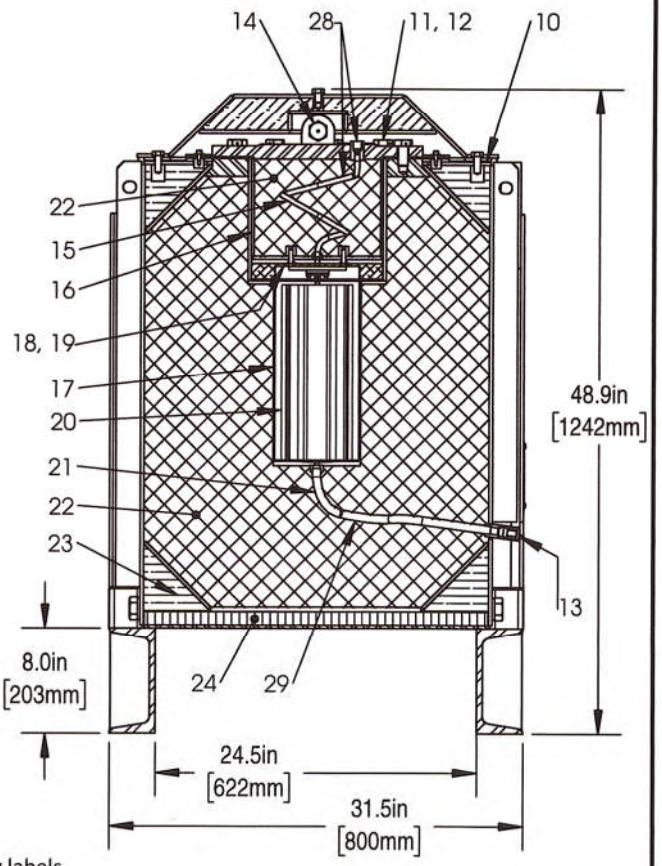


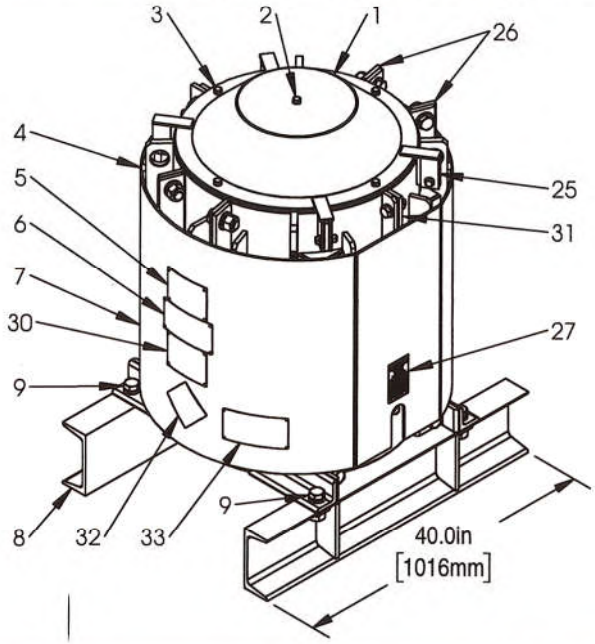


Notes

1. CNSC Certificate CDN/2072/B(U)-96
2. Meets IAEA Type B(U) Requirements
3. Steel Encased Lead Shielding: 254 mm (10 in) .
4. Gross Weight, (maximum): 3,580 kg (7,900 lb.).
   Plug Weight, (no attachments): 126 kg (278 lb.).
5. Projected Floor Loading: 4,405 kg/m² (905 lb./ft²).
6. Cavity Depth, maximum:
   1) Three tungsten shielding plates: 360 mm (14.2 in);
   2) Two tungsten shielding plates: 368 mm (14.5 in);
   3) One tungsten shielding plate: 376 mm (14.8 in);
   4) No tungsten shielding plates: 384 mm (15.1 in).
7. Authorized contents: Cobalt-60. Maximum activity with:
   1) Three tungsten shielding plates: 2,220 TBq (60,000 Ci); or
   2) Two tungsten shielding plates: 1,110 TBq (30,000 Ci); or
   3) One tungsten shielding plate: 555 TBq (15,000 Ci); or
   4) No tungsten shielding plates: 228 TBq (7,500 Ci).
8. Gap between bottom of Plug and bottom of Plug Cavity must be filled with, as needed, Shield Plates, the Source Carrier, and a Gap Filler Disc.
9. For F-127 bodies serial numbers 59 and up.


Nordion
447 March Road,
Ottawa, On K2K 1X8
Canada
Tel: (613) 592-2790
Fax: (613) 592-6937


TITLE

**F-127-S TRANSPORT PACKAGING (TO IAEA 1996 TRANSPORT REGULATIONS)**

| | | | |
|---|---|---|---|
| File: **F512701-001** | ISSUE **A** | REVISED | CF 8800 |
| CREATED 2019-01-04 | | Package No: **F-127-S (1996)** | |
| DRAWN JK | CHECKED GF | APPROVED RE | |
| | | SHEET 1 OF 1 | |


THIS DRAWING IS THE PROPERTY OF NORDION AND IS SUBMITTED FOR CONSIDERATION ON THE UNDERSTANDING THAT THERE SHALL BE NO EXPLOITATION OF ANY INFORMATION CONTAINED HEREIN EXCEPT WITH THE SPECIFIC WRITTEN AGREEMENT OF NORDION.

## Parts List

1. Shield Cap with Neoprene Gasket
2. ½ — 13 UNC x ¾ in. lg Hex Bolt (1)
3. ½ — 13 UNC x 1 ¼ in. lg Hex Bolt (4)
4. ½ — 13 UNC x 11/16 in. lg Socket HD (4) to Retain Fireshield
5. Radiation Caution Plate (2)
6. MDS Nordion Identification Plate (2)
7. Removable Fireshield
8. Removable Skid
9. Skid Bolts: 1 — 8 UNC x 3 in. lg Hex HD (8)
10. Neoprene Gasket for Plug Assembly
11. Stainless Steel Plug Bolts: ¾ — 10 UNC x 1 ½ in. lg Hex HD (9)
12. Wire Seal
13. Stainless Steel Pipe Plug
14. Plug Lift Lug
15. Vent Tube (sealed off)
16. Plug Assembly
17. Removable Insert
18. Spacer Plates (2) - Type I - Removable
19. Spacer Plates (1) - Type II - Removable
20. Cavity - without 3 Spacer Plates 163 mm Dia x 348 mm (6.4 x 13.7 in.)
    With 3 Spacer Plates 163 mm Dia x 320 mm (6.4 x 12.6 in.)
21. Drain Tube (sealed off)
22. Lead Shielding
23. Vermiculite
24. Transite or equivalent: 25 mm (1 in.) thick
25. Cap Brackets (4): ½ — 13 UNC x 1 ¾ in. Bolts and Nuts
26. Fireshield Brackets (4): 1 — 8 UNC x 2 ½ in. Bolts and Nuts
27. Storage Plaque (Heat Emitter) (2)
28. Fireshield Brackets (2): ¾ — 10 UNC x 2 ½ in. Bolts and Nuts
29. Category Label (2): on opposite sides of the container
30. UN Number Labels (2): one next to each of the two radioactive category labels

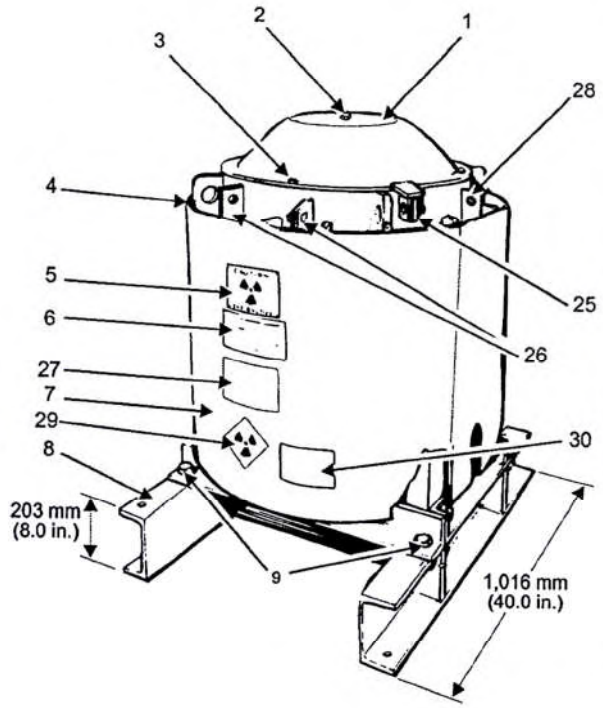


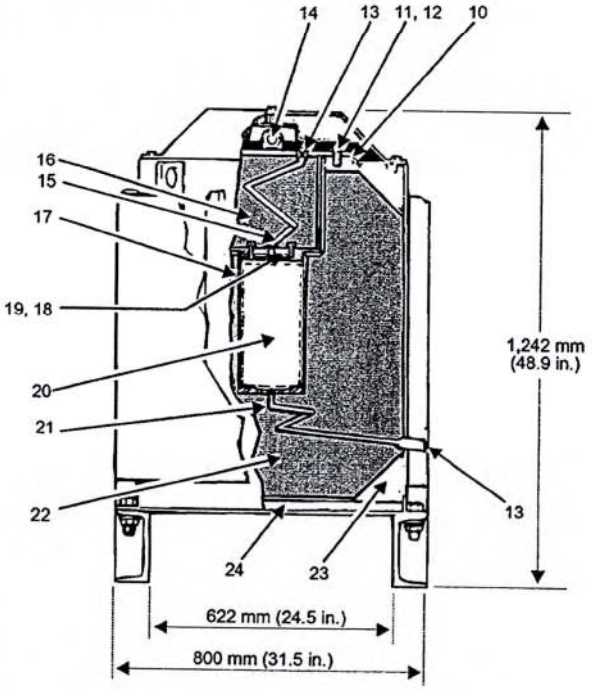


## Notes

1. CNSC Certificate CDN/2072/B(U)-96
2. Meets IAEA Type B(U) Requirements
3. Steel Encased Lead Shielding: 254 mm (10 in.)
4. Gross Weight: 3,580 kg (7,900 lb.)
   Plug Weight: 147 kg (325 lb.)
5. Projected Floor Loading: 4,405 kg/m² (905 lb./ft.²)
6. Inserts Available:
   - F-128: Bucket
   - F-180: Cage for 64 Sealed Sources
   - F-216: Carrier for 8 Bulk Capsules
   - F-407: Leakproof insert for C-14
   - F-415: Bucket
7. Authorized contents: 1) 2,220 TBq (60,000 Ci) cobalt-60
   2) 185 TBq (5,000 Ci) carbon-14
8. Drain Tube and Vent Tube are sealed off
9. For F-127-X Serial Numbers 59 and up


**MDS Nordion**

*447 March Road, P.O. Box 13500*
*Kanata, Ontario, Canada, K2K 1X8*
*Tel: (613) 592-2790 · Fax. (613) 592-6937*



THIS DRAWING IS THE PROPERTY OF MDS NORDION INC. AND IS SUBMITTED FOR CONSIDERATION ON THE UNDERSTANDING THAT THERE SHALL BE NO EXPLOITATION OF ANY INFORMATION CONTAINED HEREIN EXCEPT WITH THE SPECIFIC WRITTEN AGREEMENT OF MDS NORDION INC.


TITLE

# F-127-X Transport Packaging (To IAEA 1996 Transport Regulations)

| | | | |
|---|---|---|---|
| REF. IN/SS 1864 F127X-96 F112701-001 | | REVISED Nov 03 | DCN A2902-D01A |
| DATE JUNE 2002 | | No. F-127-X(1996) | ISSUE 3 |
| DRAWN JC | CHECKED JR | APPROVED MK | SHEET 1 OF 1 |

## Parts List

1. Shield Cap with Neoprene Gasket
2. ½ — 13 UNC x ¾ in. lg Hex Bolt (1)
3. ½ — 13 UNC x 1 ¼ in. lg Hex Bolt (4)
4. ½ — 13 UNC x 11/16 in. lg Socket Head (4) to Retain Fireshield
5. Radiation Caution Plate (2)
6. MDS Nordion Identification Plate (2)
7. Removable Fireshield
8. Removable Skid
9. Skid Bolts: 1 — 8 UNC x 3 in. lg Hex Head (8)
10. Neoprene Gasket for Plug Assembly
11. Socket Head Screws: ¾ — 10 UNC x 1 ½ in. (9)
12. Wire Seal
13. Stainless Steel Pipe Plug
14. Plug Lift Lug
15. Vent Tube (sealed off)
16. RAI Plug Assembly
17. Sealed Source
18. Levelling Screw Block & Screws (3)
19. Cavity
20. Drain Tube
21. Lead Shielding
22. Vermiculite
23. Transite or equivalent: 25 mm (1 in.) thick
24. Cap Brackets (4): ½ — 13 UNC x 1 ¾ in. Bolts and Nuts
25. Fireshield Brackets (4): 1 — 8 UNC x 2 ½ in. Bolts and Nuts
26. Caution Plate/Bracket
27. Source Holder Assembly
28. Fireshield Brackets (2): ¾ — 10 UNC x 2 ½ in. Bolts and Nuts
29. Storage Plaque (Heat Emitter) (2)
30. Category Label (2): on opposite sides of container
31. Stainless Steel Wire Brush
32. UN Number Labels (2): one next to each of the two radioactive category labels

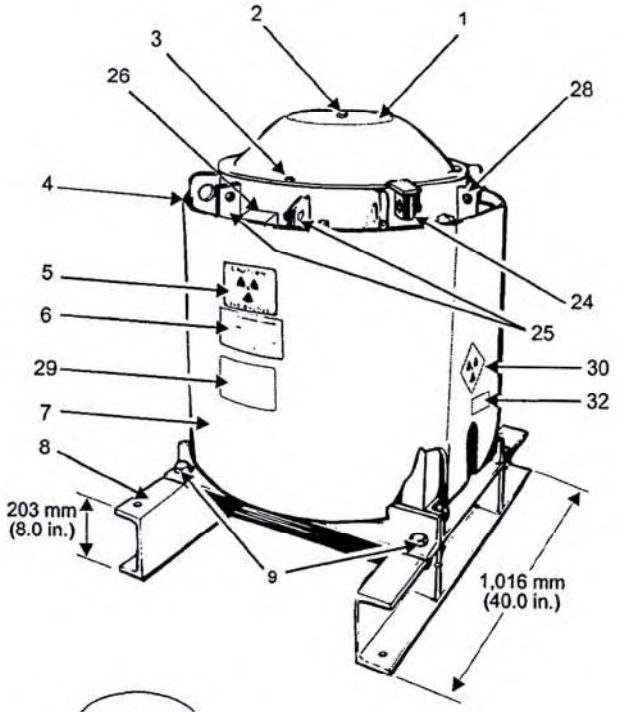


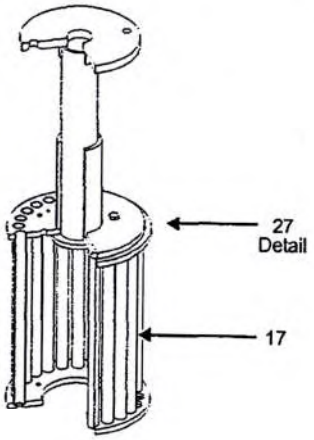


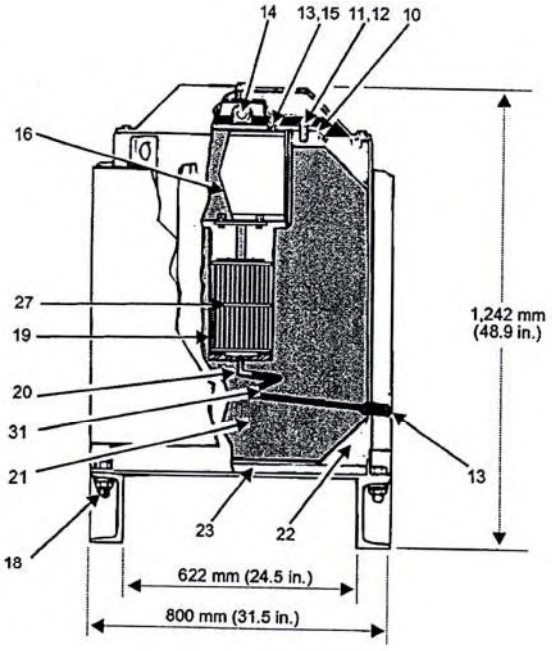


## Notes

1. CNSC Certificate CDN/2072/B(U)-96
2. Standard F-127 Modified to MDS Nordion Dwg. No.: C101502-A09509
3. Meets IAEA Type B(U) Requirements
4. Lead Shielding: 254 mm (10 in.)
5. Gross Weight: 3,580kg (7,900 lb.)
   Plug Weight: 147 kg (325 lb.)
6. Projected Floor Loading: 4,405 kg/m$^2$ (905 lb./ft.$^2$)
7. Authorized contents: 2,220 TBq (60,000 Ci) cobalt-60
8. For RAI/F-127 Serial Numbers 59 and up


**MDS Nordion**

*447 March Road, P.O. Box 13500*
*Kanata, Ontario, Canada, K2K 1X8*
*Tel: (613) 592-2790 · Fax. (613) 592-6937*



THIS DRAWING IS THE PROPERTY OF MDS NORDION INC. AND IS SUBMITTED FOR CONSIDERATION ON THE UNDERSTANDING THAT THERE SHALL BE NO EXPLOITATION OF ANY INFORMATION CONTAINED HEREIN EXCEPT WITH THE SPECIFIC WRITTEN AGREEMENT OF MDS NORDION INC.


TITLE

# RAI/F-127 Transport Packaging (To IAEA 1996 Transport Regulations)

| | | | |
|---|---|---|---|
| REF. IN/SS 1865 RAI-F127-96 C101502-A09509 | | REVISED Nov 03 | DCN A2902-D-01A |
| DATE JUNE 2002 | | No. RAI/F-127(1996) | ISSUE 3 |
| DRAWN JC | CHECKED JR | APPROVED MK | SHEET 1 OF 1 |

U.S. Department of
Transportation

**Pipeline and
Hazardous Materials
Safety Administration**

**East Building, PHH-23
1200 New Jersey Ave, SE
Washington, D.C. 20590**

**CERTIFICATE NUMBER:** USA/0509/B(U)-96

**ORIGINAL REGISTRANT(S):**

Source Production and Equipment Company, Inc.
113 Teal Street
St. Rose, LA, 70087
USA

International Isotopes Inc.
4137 Commerce Circle
Idaho Falls, ID, 83401
USA

Canadian Nuclear Laboratories
286 Plant Road
Chalk River, Ontario, K0J 1J0
Canada

Best Theratronics Ltd.
413 March Road
Ottawa, Ontario, K2K 0E4
CANADA

Nordion (Canada) Inc.
447 March Road
Ottawa, Ontario, K2K 1X8
Canada

Mayak Production Association
Suite F
Breakspear Park
Breakspear Way
Hemel, Hempstead, HP2 4TZ
United Kingdom