U.S. Department of Transportation

Pipeline and Hazardous Materials Safety Administration

East Building, PHH-23
1200 New Jersey Ave, SE
Washington, D.C. 20590

IAEA CERTIFICATE OF COMPETENT AUTHORITY
SPECIAL FORM RADIOACTIVE MATERIALS

CERTIFICATE USA/0458/S-96, REVISION 7

This certifies that the source described has been demonstrated to meet the regulatory requirements for special form radioactive material as prescribed in the regulations of the International Atomic Energy Agency[1] and the United States of America[2] for the transport of radioactive material.

1. Source Identification - Neutron Products, Inc. Model NPRP 450-10-B.

2. Source Description - Cylindrical double encapsulation made of Type 316L stainless steel with fusion seal welded endcaps. Approximate outer dimensions are 11.1 mm (0.437 in.) in diameter and 451.5 mm (17.777 in.) in length. Construction shall be in accordance with attached Neutron Products, Inc. Drawing No. A-200355, Rev. A, or Neutron Products, Inc. Drawing No. A-200355, Rev. B.

3. Radioactive Contents - Source capsules manufactured in accordance with Neutron Products, Inc. Drawing No. A-200355, Rev. A, shall contain no more than 445 TBq (12,000 Ci) of Cobalt-60. Source capsules manufactured in accordance with Neutron Products, Inc. Drawing No. A-200355, Rev. B, shall contain no more than 500 TBq (13,500 Ci) of Cobalt-60. The Co-60 is in the form of solid metal rods.

4. Management System Activities - Records of Management System activities required by Paragraph 306 of the IAEA regulations shall be maintained and made available to the authorized officials for at least three years after the last shipment authorized by this certificate. Consignors in the United States exporting shipments under this certificate shall satisfy the requirements of Subpart H of 10 CFR 71.

---

[1] "Regulations for the Safe Transport of Radioactive Material, 2012 Edition, No. SSR-6" published by the International Atomic Energy Agency (IAEA), Vienna, Austria.

[2] Title 49, Code of Federal Regulations, Parts 100-199, United States of America.

CERTIFICATE USA/0458/S-96, REVISION 7

5. Expiration Date - This certificate expires on January 31, 2028. Previous editions which have not reached their expiration date may continue to be used.

This certificate is issued in accordance with paragraph(s) 804 of the IAEA Regulations and Section 173.476 of Title 49 of the Code of Federal Regulations, in response to the December 6, 2022 petition by Neutron Products, Inc., Dickerson, MD, and in consideration of other information on file in this Office.

Certified By:

for William Schoonover
Associate Administrator for Hazardous Materials Safety

January 13, 2023
(DATE)

Revision 7 - Issued to extend the expiration date.

NOTES:

1. STAINLESS STEEL TUB AND ENDCAPS 316L
2. LIGHT PRESS FIT INTO TUBING C'BORE
3. SPACE FOR THERMAL EXPANSION
4. ENGRAVING .093 HIGH X .005 - .010 DEEP
5. STAINLESS STEEL SPACERS 300 - SERIES

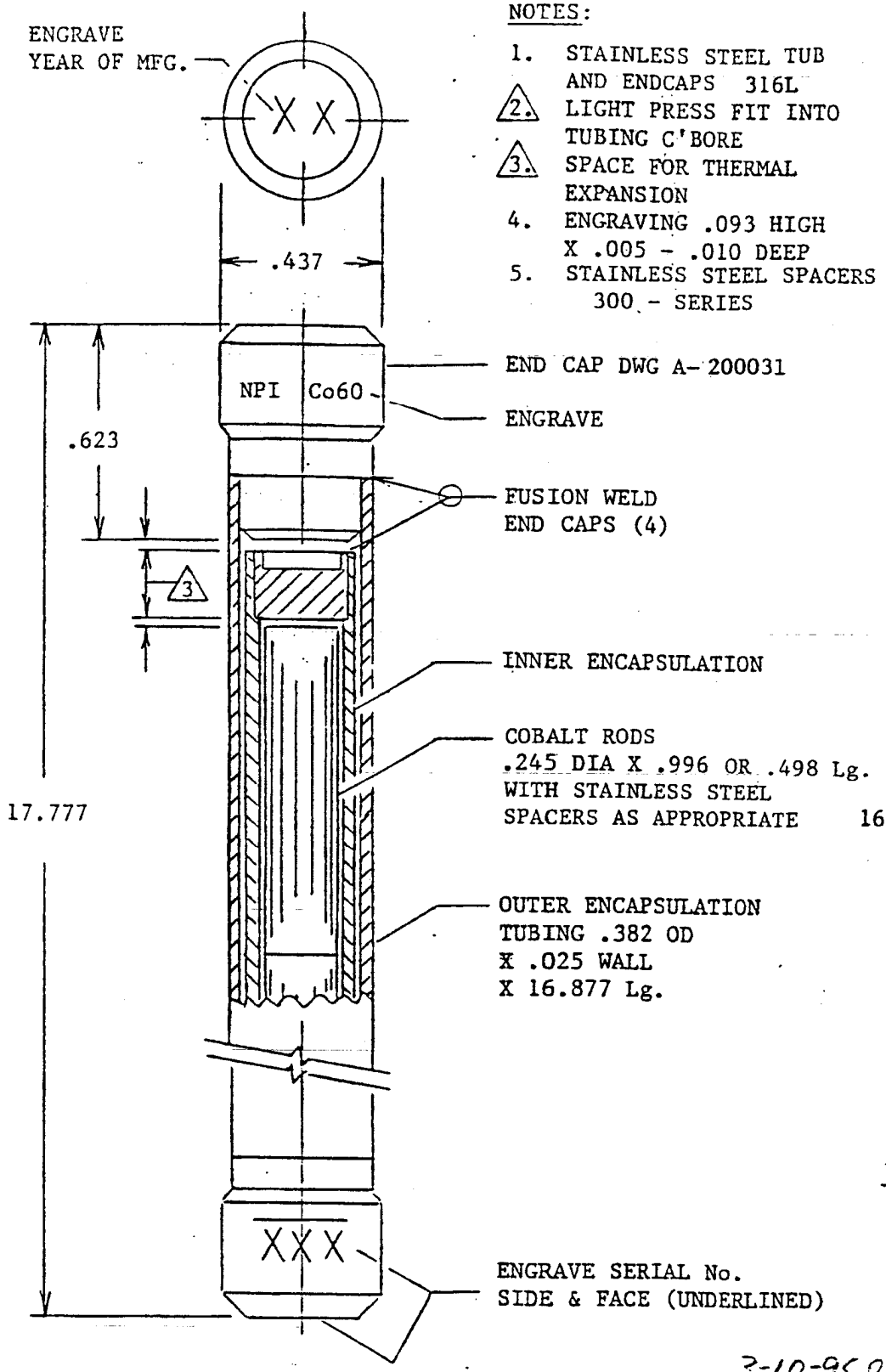

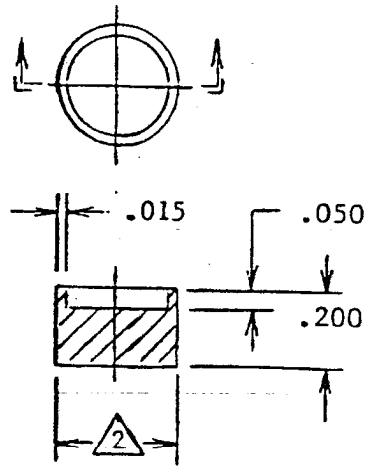

END CAPS (2 REQ)

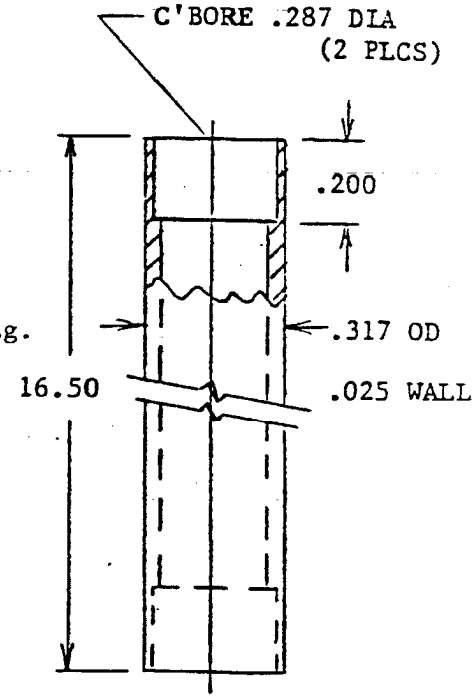

TUBING

INNER ENCAPSULATION

3-10-95 0 B SO LETE SEE REV

UNLESS OTHERWISE SPECIFIED DIMENSIONS ARE IN INCHES	NEUTRON PRODUCTS INC Dickerson, Maryland		
TOLERANCES ANGULAR DECIMAL FRACTIONAL	TITLE RADIATION PROCESSING SOURCE NPRP 450-10-B	APPROVED FS	ISSUED DATE 11/21/90
DRAWN ED 11-20-90		SIZE A / DWG. NO. 200355	REV. A 2/6/92
DESIGN FS 11-20-90		SCALE 2X	SHEET
CHECKED FS			

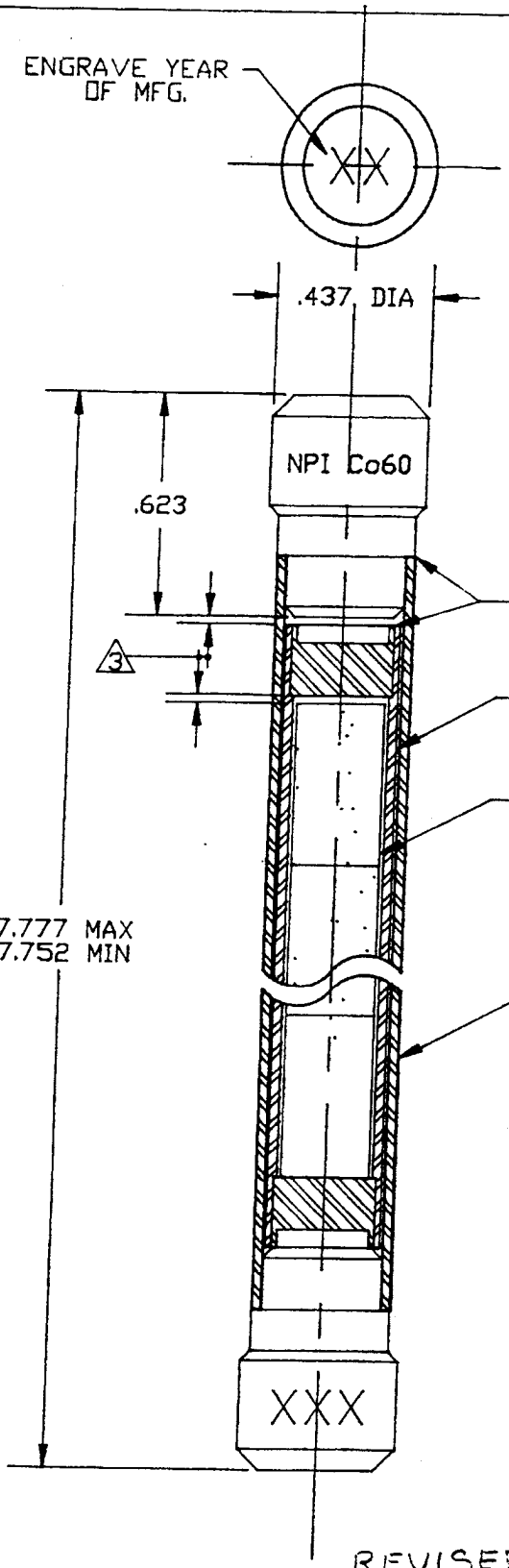

NOTE:

1. STAINLESS STEEL TUBING AND END CAPS - 316L
2. LIGHT PRESS FIT INTO TUBING C'BORE
3. SPACE FOR THERMAL EXPANSION
4. ENGRAVING .093 HIGH × .005 - .010 DEEP
5. STAINLESS STEEL SPACERS 300 SERIES
6. DIMENSIONS ARE NOMINAL SEE DWG C-200359 (COMPONANTS) FOR TOLERANCES AND ENGRAVING DETAILS

FUSION WELD END CAPS (4)

INNER ENCAPSULATION

COBALT RODS .245 DIA × .996 OR .498 LG WITH STAINLESS STEEL SPACERS AS APPROPRIATE

OUTER ENCAPSULATION TUBING .382 OD × .025 WALL × 16.865 LG

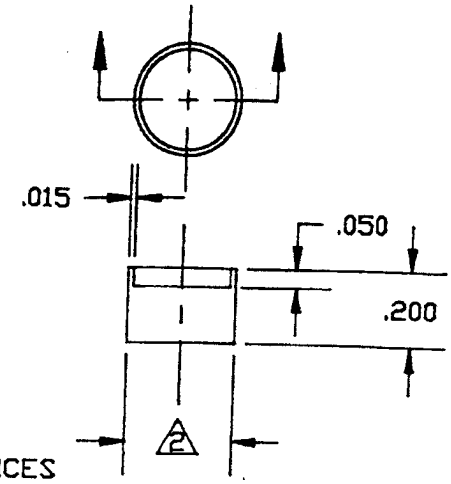

END CAP
INNER ENCAPSULATION
(2 REQ'D)

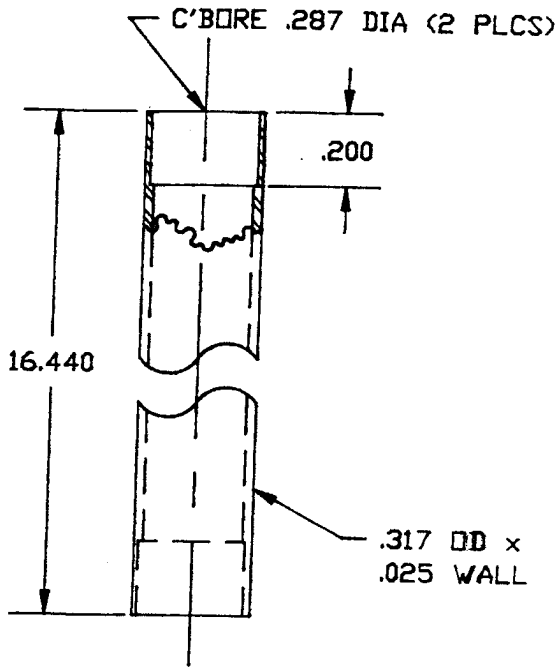

TUBING
INNER ENCAPSULATION

REVISED 3-10-95 BY JG-CHECKED BY F.S.

UNLESS OTHERWISE SPECIFIED DIMENSIONS ARE IN INCHES	NEUTRON PRODUCTS INC		
TOLERANCES ANGULAR ±3° DECIMAL .XX=±.01 .XXX=±.005 FRACTIONAL	TITLE RADIATION PROCESSING SOURCE NPRP 450-10-B	APPROVED FS	ISSUED DATE 11/21/90
DRAWN ED 11-20-90		SIZE A	DWG. NO. 200355 REV B
DESIGN ED 11-20-90		SCALE 2X	SHEET 1 OF 1
CHECKED FS			

U.S. Department of
Transportation

**Pipeline and
Hazardous Materials
Safety Administration**

**East Building, PHH-23
1200 New Jersey Ave, SE
Washington, D.C. 20590**

CERTIFICATE NUMBER: USA/0458/S-96

ORIGINAL REGISTRANT(S):

Neutron Products, Inc.
22301 Mt. Ephraim Road
P.O. Box 68
Dickerson, MD, 20842
USA

Nordion (Canada) Inc.
447 March Road
Ottawa, Ontario, K2K 1X8
Canada