East Building, PHH-23
1200 New Jersey Ave, SE
Washington, D.C. 20590

U.S. Department of Transportation

Pipeline and Hazardous Materials Safety Administration

IAEA CERTIFICATE OF COMPETENT AUTHORITY SPECIAL FORM RADIOACTIVE MATERIALS

CERTIFICATE USA/0377/S, REVISION 11

This certifies that the sources described have been demonstrated to meet the regulatory requirements for special form radioactive material as prescribed in the regulations of the International Atomic Energy Agency[1] and the United States of America[2] for the transport of radioactive material.

1. Source Identification - QSA Global, Inc. Models 60011, 60012, and 60013.

2. Source Description - Cylindrical double encapsulations made of Type 304 or 304L stainless steel and seal welded. Approximate outer dimensions are 6.35 mm (0.25 in.) in diameter and 24.3 mm (0.96 in.) in length (Model 60011); 8.89 mm (0.35 in.) in diameter and 32.5 mm (1.28 in.) in length (Model 60012); and 12.1 mm (0.48 in.) in diameter and 40.3 mm (1.59 in.) in length (Model 60013). Inner capsules are made of stainless steel or titanium, secured by stainless steel, titanium, or aluminum spacer disks and springs. Construction shall be in accordance with attached Tech/Ops Drawing No. 60060, Rev. B.

3. Radioactive Contents - No more than 8.14 TBq (220.0 Ci) of Cobalt-60 for the Model 60011. No more than 25.9 TBq (700.0 Ci) of Cobalt-60 for the Model 60012. No more than 44.4 TBq (1,200.0 Ci) of Cobalt-60 for the Model 60013. The Co-60 is in solid metallic form.

---

[1] "Regulations for the Safe Transport of Radioactive Material, 2018 Edition, No. SSR-6 (Rev. 1)" published by the International Atomic Energy Agency (IAEA), Vienna, Austria.

[2] Title 49, Code of Federal Regulations, Parts 100-199, United States of America.

CERTIFICATE USA/0377/S, REVISION 11

4. Management System Activities - Records of Management System activities required by Paragraph 306 of the IAEA regulations shall be maintained and made available to the authorized officials for at least three years after the last shipment authorized by this certificate. Consignors in the United States exporting shipments under this certificate shall satisfy the requirements of Subpart H of 10 CFR 71.

5. Expiration Date - This certificate expires on May 16, 2030. Previous editions which have not reached their expiration date may continue to be used.

This certificate is issued in accordance with paragraph(s) 804 of the IAEA Regulations and Section 173.476 of Title 49 of the Code of Federal Regulations, in response to the April 30, 2025 petition by QSA Global, Inc., Burlington, MA, and in consideration of other information on file in this Office.

Certified By:

for William Schoonover
Associate Administrator for Hazardous Materials Safety

May 07, 2025
(DATE)

Revision 11 - Issued to endorse to 2018 edition of the IAEA Regulations for the Safe Transport of Radioactive Material, SSR-6 (Rev. 1) and to extend the expiration date.

REV.	DATE	DESCRIPTION
A	25 SEP 85	SEE SHT 1 FT/GN
B	1 MAY '86	NOTES ADDED TO DESCRIBE ADDITIONAL CONTENTS FT/

NOTES:

1. EACH SOURCE CAPSULE IS SEAL WELDED IN ACCORDANCE WITH TECH/OPS STANDARD SOURCE ENCAPSULATION PROCEDURE
2. IN ADDITION TO THE RADIONUCLIDE, COBALT-60, THE SOURCE CAPSULE MAY CONTAIN STAINLESS STEEL, TITANIUM OR ALUMINUM AS A SECONDARY ENCAPSULATION SPACER OR SPRING

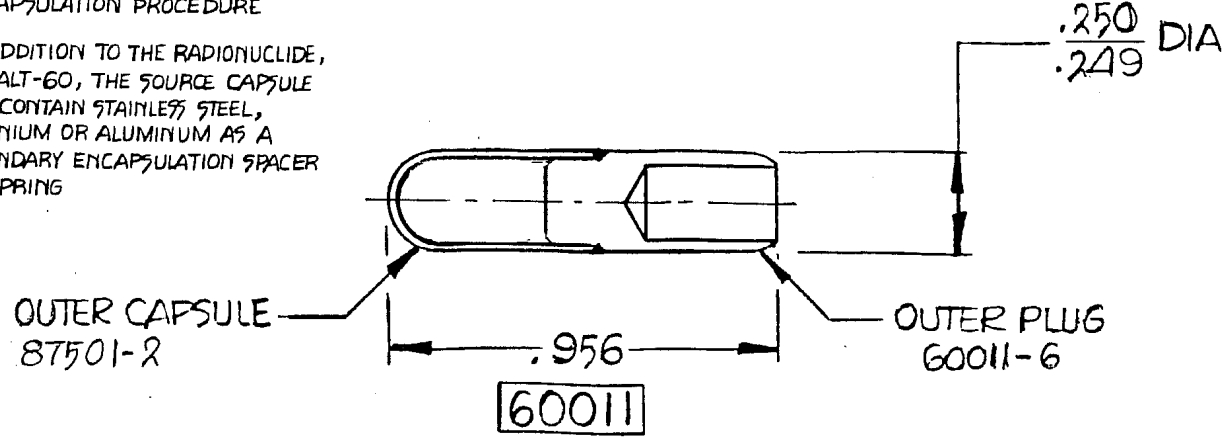

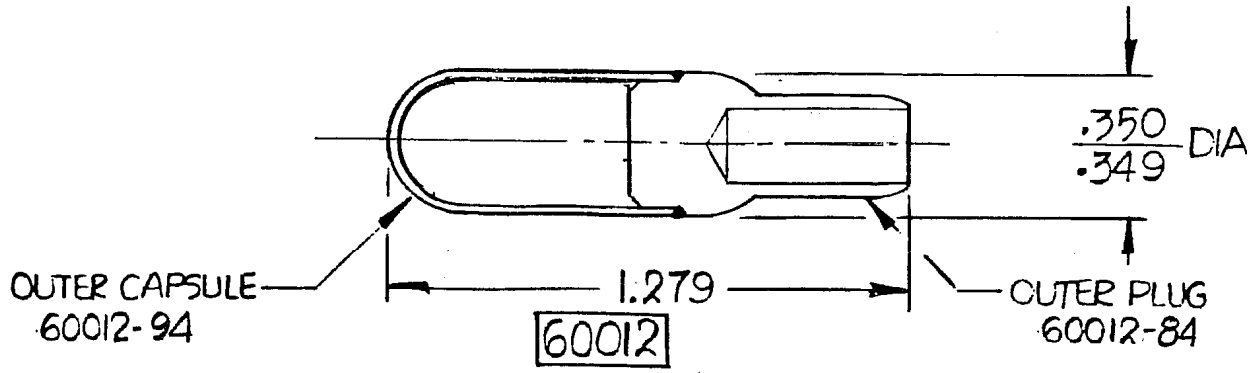

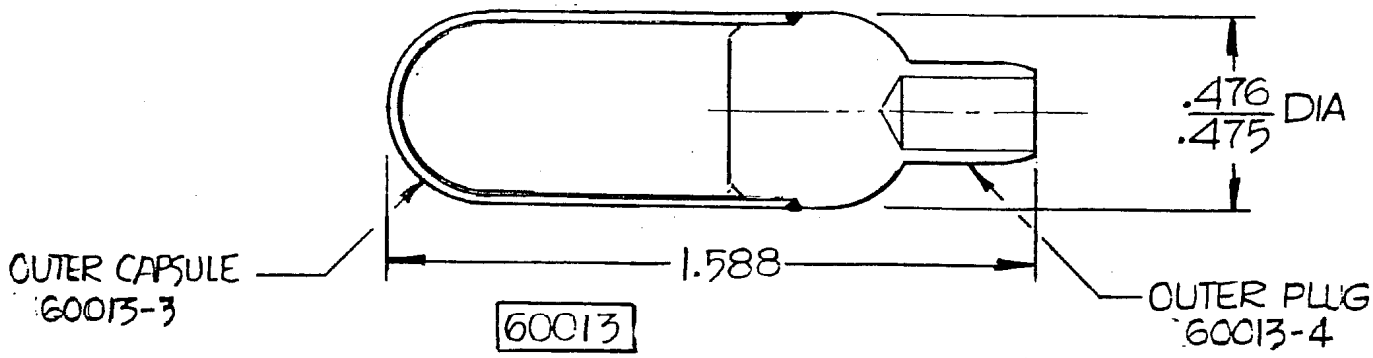

MATERIALS	
FINISH	
DRAWN BY	Tindy 25 Jul. 79
CHECKED BY	
APPROVED BY	

UNLESS OTHERWISE SPECIFIED TOLERANCES ARE

.X	±
.XX	±
.XXX	±
ANGLES	±
FRACTIONS	±

Tech/Ops

TECH/OPS, INC.
RADIATION PRODUCTS DIVISION
BURLINGTON, MA 01803

DWG TITLE

COBALT 60 SOURCE REFERENCE

CLASSIFICATION	SIZE	DWG. NO.	REV.
	A	60060	B

SCALE 2:1 SHEET 2 OF 3

U.S. Department of
Transportation

**Pipeline and
Hazardous Materials
Safety Administration**

**East Building, PHH-23
1200 New Jersey Ave, SE
Washington, D.C. 20590**

CERTIFICATE NUMBER: USA/0377/S-96

ORIGINAL REGISTRANT(S):

QSA Global, Inc.
40 North Avenue
Burlington, MA, 01803
USA

Industrial Nuclear Company, Inc.
14320 Wicks Blvd.
San Leandro, CA, 94577
USA

Bonded Inspections Incorporated
3840 Marquis Street
Garland, TX, 75042
USA

Calumet Testing Services, Inc.
1945 N. Griffith Blvd.
Griffith, IN, 46309
USA

Duke Energy Corporation
526 South Church Street
Charlotte, NC, 28202-1802
USA

Space Science Services
5518 Force Four Parkway
Orlando, FL, 32839
USA

QC Laboratories, Inc.
2628 Silver Star Road
Orlando, FL, 32808-4626
USA

Davis Laboratories

4175 West Tompkins Avenue
Las Vegas, NV, 89103
USA