U.S. Department of Transportation

Pipeline and Hazardous Materials Safety Administration

East Building, PHH-23
1200 New Jersey Ave, SE
Washington, D.C. 20590

COMPETENT AUTHORITY CERTIFICATION FOR A TYPE B(U)F FISSILE RADIOACTIVE MATERIALS PACKAGE DESIGN CERTIFICATE USA/0208/B(U)F-96, REVISION 13

REVALIDATION OF JAPANESE COMPETENT AUTHORITY CERTIFICATE J/61/B(U)F-96

The Competent Authority of the United States certifies that the radioactive material package design described in this certificate satisfies the regulatory requirements for a Type B(U)F package as prescribed in the regulations of the International Atomic Energy Agency[1] and the United States of America[2].

1. Package Identification - JRC-80Y-20T.

2. Package Description and Authorized Radioactive Contents - as described in Japanese Certificate of Competent Authority J/61/B(U)F-96, Revision 3 (attached).

3. Criticality - The minimum criticality safety index is 0.0. The maximum number of packages per conveyance is determined in accordance with Table 11 of the IAEA regulations cited in this certificate.

4. General Conditions -

   a. Each user of this certificate must have in his possession a copy of this certificate and all documents necessary to properly prepare the package for transportation. The user shall prepare the package for shipment in accordance with the documentation and applicable regulations.

   b. Each user of this certificate, other than the original petitioner, shall register his identity in writing to the Office of Engineering and Research, (PHH-23), Pipeline and Hazardous Materials Safety Administration, U.S. Department of Transportation, Washington D.C. 20590-0001.

---

[1] "Regulations for the Safe Transport of Radioactive Material, 2012 Edition, No. SSR-6" published by the International Atomic Energy Agency (IAEA), Vienna, Austria.

[2] Title 49, Code of Federal Regulations, Parts 100-199, United States of America.

CERTIFICATE USA/0208/B(U)F-96, REVISION 13

c. This certificate does not relieve any consignor or carrier from compliance with any requirement of the Government of any country through or into which the package is to be transported.

d. This certificate provides no relief from the limitations for transportation of plutonium by air in the United States as cited in the regulations of the U.S. Nuclear Regulatory Commission 10 CFR 71.88.

e. Records of Management System activities required by Paragraph 306 of the IAEA regulations[1] shall be maintained and made available to the authorized officials for at least three years after the last shipment authorized by this certificate. Consignors in the United States exporting shipments under this certificate shall satisfy the applicable requirements of Subpart H of 10 CFR 71.

5. Special Conditions - Package is not authorized for transport by air.

6. Marking and Labeling - The package shall bear the marking USA/0208/B(U)F-96 in addition to other required markings and labeling.

7. Expiration Date - This certificate expires on May 28, 2022.

This certificate is issued in accordance with paragraph(s) 810 and 816 of the IAEA Regulations and Section 173.472 and 173.473 of Title 49 of the Code of Federal Regulations, in response to the July 11, 2018 petition by Edlow International Company, Washington, DC, and in consideration of other information on file in this Office.

Certified By:

for William Schoonover
Associate Administrator for Hazardous Materials Safety

August 16, 2019
(DATE)

Revision 13 - Issued to revalidate Japanese Certificate of Approval No. J/61/B(U)F-96, Revision 3, dated October 10, 2017.

IDENTIFICATION MARK
J/61/B(U)F-96(Rev.3)

COMPETENT AUTHORITY
OF
JAPAN

CERTIFICATE FOR APPROVAL OF PACKAGE DESIGN FOR THE TRANSPORT OF RADIOACTIVE MATERIALS

ISSUED BY

NUCLEAR REGULATION AUTHORITY
1-9-9, ROPPONGI MINATO-KU
TOKYO, JAPAN

CERTIFICATE FOR APPROVAL OF PACKAGE DESIGN FOR THE TRANSPORT OF RADIOACTIVE MATERIALS

This is to certify, in response to the application by Japan Atomic Energy Agency, that the package design described herein complies with the design requirements for a package containing spent fuel elements, specified in the 2012 Edition of the Regulations for the Safe Transport of Radioactive Materials (International Atomic Energy Agency, Safety Standards Series No.SSR-6) and the Japanese rules based on the Act on the Regulation of Nuclear Source Material, Nuclear Fuel Material and Reactors.

This certificate does not relieve the consignor from compliance with any requirement of the government of any country through or into which the package will be transported.

COMPETENT AUTHORITY
IDENTIFICATION MARK : J/61/B(U)F-96(Rev.3)

Oct. 10, 2017
Date

青木一哉
Kazuya Aoki

Director, Division of Licensing for
Nuclear Fuel Facilities

Secretariat of Nuclear Regulation Authority
Competent Authority of JAPAN
for Package Design Approval

1. The Competent Authority Identification Mark : J/61/B(U)F-96(Rev. 3)

2. Name of Package : Type JRC-80Y-20T

3. Type of Package : Type B(U) package for fissile material

4. Specification of Package

(1) Material of Packaging

(i) Body & Lid : Stainless steel

(ii) Basket : Stainless steel, Boron Carbide

(iii) Fin(Heat dissipation and shock absorbing) : Stainless steel

(2) Total Weight of Packaging : Approximately 22.8×10^3 kg

(3) Outer Dimensions of Packaging

(i) Outer Diameter : Approximately 1.9 m

(ii) Height : Approximately 2.1 m

(4) Total Weight of Package : Approximately 23.2×10^3 kg or less

(5) Illustration of Package : See the attached Figure-1(Bird's-eye view)

5. Specification of Radioactive Contents : See the attached Table-1

6. Description of Containment System

Containment system consists of body, lid, vent valve, and drain valve made of stainless steel.
Silicone rubber is used for contact surface of the lid, the valves, and valve seat.

7. For Package containing Fissile Materials

(1) Restrictions on Package

(i) Restriction Number "N" : No restriction

(ii) Array of package : No restriction

(iii) Criticality Safety Index (CSI) : 0

(2) Description of Confinement System

Confinement system consists of the basket which maintains the fuel elements contained in the package.

(3) Assumptions of Leakage of Water into Package

The subcriticality calculation is evaluated upon the assumption that internal void spaces of the package are filled with water, not only during routine transport but also under both normal and accident conditions.

(4) Special Features in Criticality Assessment

Any special features are not considered in the criticality assessment.

8. For Type B(M) Packages, a statement regarding prescriptions of Type B(U) Package that do not apply to this Package
Not applicable. (This package is Type B(U).)

9. Assumed Ambient Conditions

(ⅰ) Ambient Temperature Range : - 40℃～38℃

(ⅱ) Insolation Data : Table 12 of IAEA Regulation

10. Handling, Inspection and Maintenance

(1) Handling Instructions

(ⅰ) Package should be handled carefully in accordance with the schedule and procedures established properly taking all possible safety measures.

(ⅱ) Package should be handled using appropriate lifting devices and the crane.

(ⅲ) When packaging is stored outdoors, it should be covered with an appropriate waterproof sheet, avoiding the situation where it is placed directly on the ground.

(2) Inspections and Maintenance of Packaging

The following inspections should be performed not less than once a year (once for every ten times in a case where the packaging is used not less than ten times a year) and defect of packaging should be repaired, if any, in order to maintain the integrity of packaging.

(ⅰ) Visual Inspection
(ⅱ) Leakage Rate Measurement Inspection
(ⅲ) Lifting Inspection
(ⅳ) Subcriticality Inspection
(ⅴ) Heat Transfer Inspection
(ⅵ) Shielding Inspection

(3) Actions prior to Shipment

The following inspections should be performed prior to shipment.

(ⅰ) Visual Inspection
(ⅱ) Lifting Inspection
(ⅲ) Weight Measurement Inspection
(ⅳ) Surface Contamination Measurement Inspection
(ⅴ) Dose Rate Measurement Inspection
(ⅵ) Subcriticality Inspection
(ⅶ) Contents Inspection
(ⅷ) Surface Temperature Measurement Inspection
(ⅸ) Leakage Rate Measurement Inspection
(ⅹ) Package Internal Pressure Measurement Inspection

(4) Precautions for Loading of Package for Shipment

Package should be securely loaded to the conveyance at the designated tie-down portion of the packaging so as not to move, roll down or fall down from the loading position during transport.

11. Issue Date and Expiry Date

(ⅰ) Issue Date : May.29, 2017

(ⅱ) Expiry Date : May.28, 2022

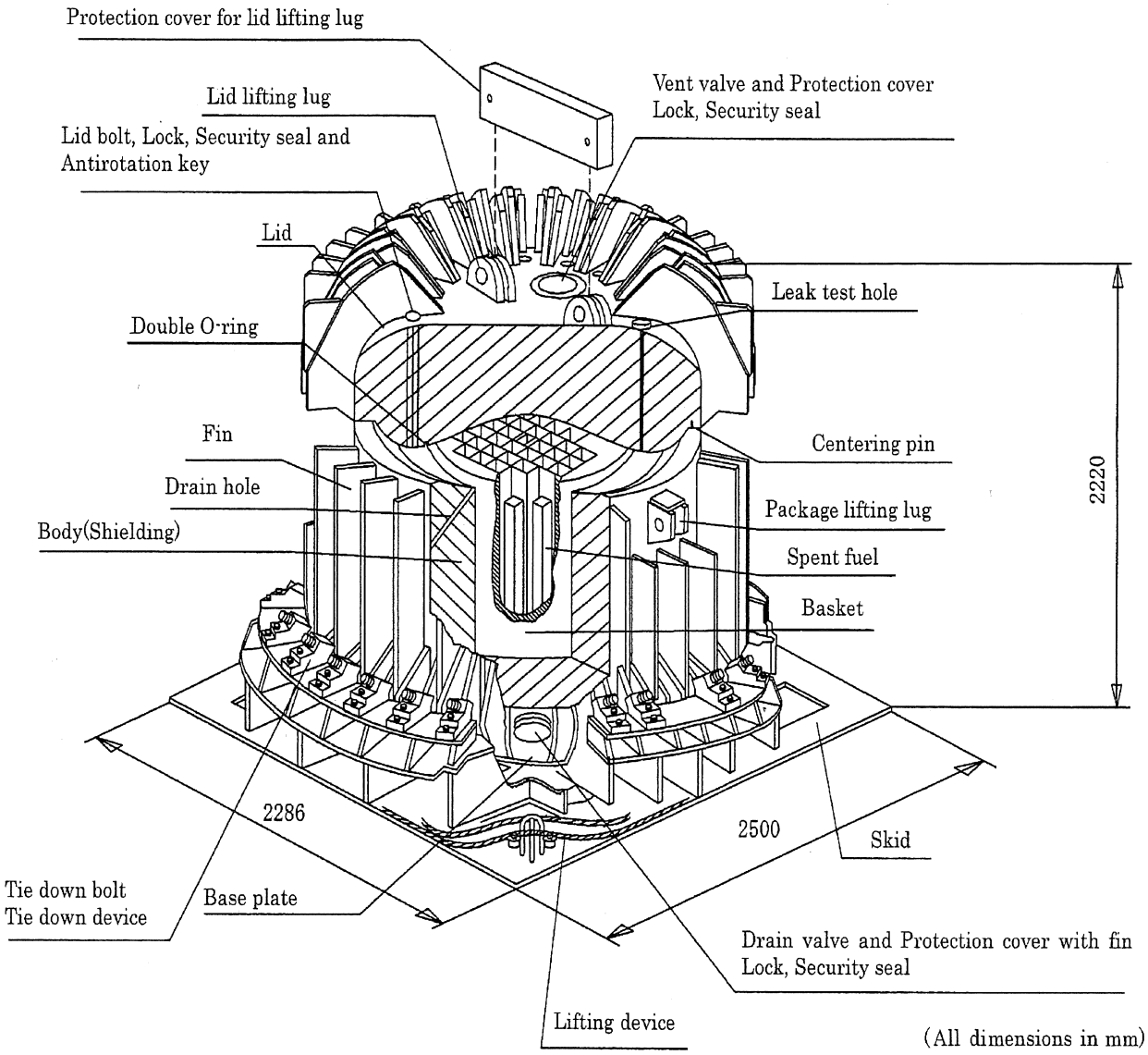

Figure-1 Illustration of JRC-80Y-20T Package

Table-1 Specification of Radioactive Contents (1/2)

Classification / Item								
Basket		Box type				Box type(with Adapters)		MNU type
Reactor		JRR-3	JRR-3	JRR-4	JRR-4	JRR-3	JRR-3	JRR-3
Fuel element		Standard aluminide type	Standard silicide type	Low enrichment silicide type	High enrichment Instrumented type (HEU)	Follower aluminide type	Follower silicide type	MNU type
Fuel type		Plate fuel	Plate fuel	Plate fuel	Plate fuel	Plate fuel	Plate fuel	Rod fuel
Number of fuel elements (piece)		40 or less	40 or less	40 or less	40 or less	40 or less	40 or less	160 or less
Initial enrichment (%) 1)		20 or less	20 or less	20 or less	93 or less	20 or less	20 or less	0.72
Total mass of ^{235}U (g/piece) 1)		306 or less	485 or less	210 or less	168 or less	194 or less	310 or less	61.2 or less
Total mass of U (g/piece) 1)		1,530 or less	2,481 or less	1,075 or less	186 or less	970 or less	1,586 or less	8,500 or less
Burnup (%) 2)		50 or less	60 or less	50 or less	15 or less	50 or less	60 or less	23 or less
Cooling time (day)		300 or more 3)	600 or more	110 or more	10,000 or more	300 or more 3)	600 or more	2,190 or more
Total activity (Bq/package)		2.04×10^{16} or less 4)	2.09×10^{16} or less	2.02×10^{16} or less	1.98×10^{14} or less	9.53×10^{15} or less 4)	1.33×10^{16} or less	9.33×10^{14} or less
Decay heat (W/package)		2.25×10^{3} or less 4)	2.24×10^{3} or less	2.15×10^{3} or less	1.69×10^{1} or less	1.03×10^{3} or less 4)	1.43×10^{3} or less	7.24×10^{1} or less
Fuel material	Fuel meat	Uranium aluminum dispersion type alloy	Uranium silicon aluminum dispersion type alloy	Uranium silicon aluminum dispersion type alloy	Uranium aluminum alloy	Uranium aluminum dispersion type alloy	Uranium silicon aluminum dispersion type alloy	Metallic natural uranium
	Clad	Aluminum alloy	Aluminum alloy	Aluminum alloy	Aluminum alloy	Aluminum alloy	Aluminum alloy	Aluminum alloy
	Side plate, etc.	Aluminum alloy	Aluminum alloy	Aluminum alloy	Aluminum alloy	Aluminum alloy	Aluminum alloy	———
Dimension at contained width×height×length (mm)		77.04×77.04×800	77.04×77.04×800	80×80×660	80×80×840	63.6×63.6×880	63.6×63.6×880	φ37×933 and φ37×944
Weight at contained (kg/piece)		8.0 or less	8.0 or less	5.6 or less	6.0 or less	5.2 or less	5.2 or less	10 or less

Note. The fuel elements of JRR-3 and JRR-4 can be contained together (except MNU type fuel elements).

1) The value in the nuclear specification shows an upper value which contains fabrication tolerance.
2) Burn up (%) = ((All depletion weight of ^{235}U) ÷ (Initial weight of ^{235}U))×100
3) One operation cycle of JRR-3 with JRR-3 aluminide fuels (standard type and follower type) is 35 days (27 days for reactor operation and 8 days for shutdown). Refueling work is carried out once in an operation cycle, and 4 standard type fuels and 2 follower type fuels are refueled in an operation cycle. Therefore, cooling time of fuels contained in the package are at a minimum of 300 days, and added 35 days in turn for every 4 standard type fuels and 2 follower type fuels. (Standard type fuel: 300 days or more (4 fuels), 335 days or more (4 fuels), ..., 615 days or more (4 fuels). Follower type fuel: 300 days or more (2 fuels), 335 days or more (2 fuels), ..., 965 days or more (2 fuels).)
4) The values in total activity and decay heat are based on the cooling time (day) in 3).

Table-1 Specification of Radioactive Contents (2/2)

Classifi-cation / Item	Basket	Box type								Box type(with Adapters)				MNU type	
	Reactor	JRR-3		JRR-3		JRR-4		JRR-4		JRR-3		JRR-3		JRR-3	
	Fuel element	Standard aluminide type		Standard silicide type		Low enrichment silicide type		High enrichment Instrumented type (H EU)		Follower aluminide type		Follower silicide type		MNU type	
Quantities of major radionuclides (per package)		Nuclide	Activity (Bq)	Nuclide	Activity (Bq)	Nuclide	Activity (Bq)	Nuclide	Activity (Bq)	Nuclide	Activity (Bq)	Nuclide	Activity (Bq)	Nuclide	Activity (Bq)
		Ce-144	6.12×10^{15}	Ce-144	6.01×10^{15}	Nb-95	3.54×10^{15}	Cs-137	5.02×10^{13}	Ce-144	2.77×10^{15}	Ce-144	3.84×10^{15}	Cs-137	1.79×10^{14}
		Pm-147	1.39×10^{15}	Pm-147	1.84×10^{15}	Ce-144	2.38×10^{15}	Sr-90	4.81×10^{13}	Pm-147	7.81×10^{14}	Pm-147	1.17×10^{15}	Pm-147	1.57×10^{14}
		Nb-95	1.36×10^{15}	Cs-137	1.10×10^{15}	Zr-95	2.31×10^{15}	Y -90	4.81×10^{13}	Nb-95	4.40×10^{14}	Cs-137	6.98×10^{14}	Sr-90	1.53×10^{14}
		Zr-95	6.41×10^{14}	Sr-90	1.06×10^{15}	Y -91	2.03×10^{15}	Kr-85	2.46×10^{12}	Cs-137	3.85×10^{14}	Sr-90	6.76×10^{14}	Y -90	1.53×10^{14}
		Cs-137	6.14×10^{14}	Y -90	1.06×10^{15}	Sr-89	1.51×10^{15}	Pm-147	2.51×10^{11}	Sr-90	3.76×10^{14}	Y -90	6.76×10^{14}	Ce-144	2.24×10^{13}

U.S. Department of
Transportation

**Pipeline and
Hazardous Materials
Safety Administration**

**East Building, PHH-23
1200 New Jersey Ave, SE
Washington, D.C. 20590**

CERTIFICATE NUMBER: USA/0208/B(U)F-96

ORIGINAL REGISTRANT(S):

Edlow International Company
1666 Connecticut Ave, N.W
Suite 201
Washington, DC, 20009
USA

Transport Logistics International (DAHER - TLI)
8161 Maple Lawn Boulevard
Suite 480
Fulton, MD, 20759
USA

Secured Transportation Services
5210 Palmero Court
Suite 107
Buford, GA, 30518
USA

Japan Atomic Energy Agency
2-4 Shirane Shirakata
Tokai-mura
Naka-gun, Ibaraki, 319-1195
Japan

TN Americas LLC
7135 Minstrel Way, Suite 300
Columbia, MD, 21045
USA