U.S. Department
of Transportation

**Pipeline and
Hazardous Materials
Safety Administration**

IAEA CERTIFICATE OF COMPETENT AUTHORITY
SPECIAL FORM RADIOACTIVE MATERIALS
CERTIFICATE USA/0043/S-96, REVISION 13

**East Building, PHH-23
1200 New Jersey Avenue SE
Washington, D.C. 20590**

This certifies that the sources described have been demonstrated to meet the regulatory requirements for special form radioactive material as prescribed in the regulations of the International Atomic Energy Agency[1] and the United States of America[2] for the transport of radioactive material.

1. Source Identification - Monsanto Research Corporation Model 2720 Series.

2. Source Description - The sources described by this certificate are cylindrical double encapsulations constructed of stainless steel with welded closures and with the dimensions indicated in the following table:

Model Number	Outside Diameter mm (inches)	Length mm (inches)
2721 A, B, or C	12.7 (0.50)	12.7 (0.50)
2722 A, B, or C	12.7 (0.50)	17.8 (0.70)
2723 A, B, or C	19.1 (0.75)	22.1 (0.87)
2724 A, B, or C	25.4 (1.00)	28.4 (1.12)
2725 A, B, or C	25.4 (1.00)	38.1 (1.50)
2726 A, B, or C	25.4 (1.00)	50.8 (2.00)
2727 A, B, or C	38.1 (1.50)	63.5 (2.50)
2728 A, B, or C	38.1 (1.50)	88.9 (3.50)
2729 C	38.1 (1.50)	53.3 (2.10)

The sources authorized by this certificate are only those that have been manufactured prior to January 1, 1985 in accordance with Monsanto Research Corporation Drawing Numbers: B2721-AA00, B2722-AA00, B2723-AA00, B2724-AA00, B2725-AA00, B2726-AA00, B2727-AA00, B2728-AA00, A2721-BA00, A2722-BA00, A2723-BA00, A2724-BA00, A2725-BA00, A2726-BA00, A2727-BA00, A2728-BA00, C2721-CA00, C2722-CA00, C2723-CA00, C2724-CA00, C2725-CA00, C2726-CA00, C2727-CA00, C2728-CA00, or C2729-CA00. Monsanto Research Corporation Drawing Numbers C2728-CA00 and C2729-CA00 are attached as examples.

---

[1] "Regulations for the Safe Transport of Radioactive Material, 1996 Edition (Revised), No. TS-R-1 (ST-1, Revised)," published by the International Atomic Energy Agency (IAEA), Vienna, Austria.

[2] Title 49, Code of Federal Regulations, Parts 100 - 199, United States of America.

3. Radioactive Contents - These sources consist of Americium-241 or Plutonium-238 as oxide in powder form mixed with a neutron producing target material (Be, B, Li, F, or C) in powder form. The maximum activity of each is as indicated in the following table:

Model Number	Maximum TBq (Ci) Content	Model Number	Maximum TBq (Ci) Content
2721 A	0.01 (0.3)	2726 B	0.59 (16)
2722 A	0.04 (1)	2727 B	1.74 (47)
2723 A	0.11 (3)	2728 B	2.78 (75)
2724 A	0.19 (5)	2721 C	0.01 (0.3)
2725 A	0.31 (8.5)	2722 C	0.05 (1.3)
2726 A	0.44 (12)	2723 C	0.09 (2.35)
2727 A	0.22 (6)	2724 C	0.21 (5.6)
2728 A	0.37 (10)	2725 C	0.42 (11.4)
2721 B	0.01 (0.4)	2726 C	0.65 (17.7)
2722 B	0.05 (1.4)	2727 C	1.78 (48)
2723 B	0.11 (2.9)	2728 C	2.89 (78)
2724 B	0.22 (6)	2729 C	1.28 (34.7)
2725 B	0.37 (10)		

4. Quality Assurance - Records of Quality Assurance activities required by paragraph 310 of the IAEA regulations[1] shall be maintained and made available to the authorized officials for at least three years after the last shipment authorized by this certificate. Consignors in the United States exporting shipments under this certificate shall satisfy the requirements of Subpart H of 10 CFR 71.

5. Expiration Date - This certificate expires on January 31, 2017. On December 31, 2014, this certificate supersedes all previous revisions of USA/0043/S-96.

This certificate is issued in accordance with paragraph 804 of the IAEA Regulations and Section 173.476 of Title 49 of the Code of Federal Regulations, in response to the August 04, 2014 petition submitted by Los Alamos National Laboratory, Los Alamos, NM, and in consideration of other information on file in this Office.

Certified by:

Dr. Magdy El-Sibaie
Associate Administrator for Hazardous Materials Safety

SEP 23 2014
(DATE)

Revision 13 - Issued to revise the applicable manufacturing date.

REVISIONS					
ZONE	SYM	DESCRIPTION	DATE	APPROVAL	DE PG QA MS

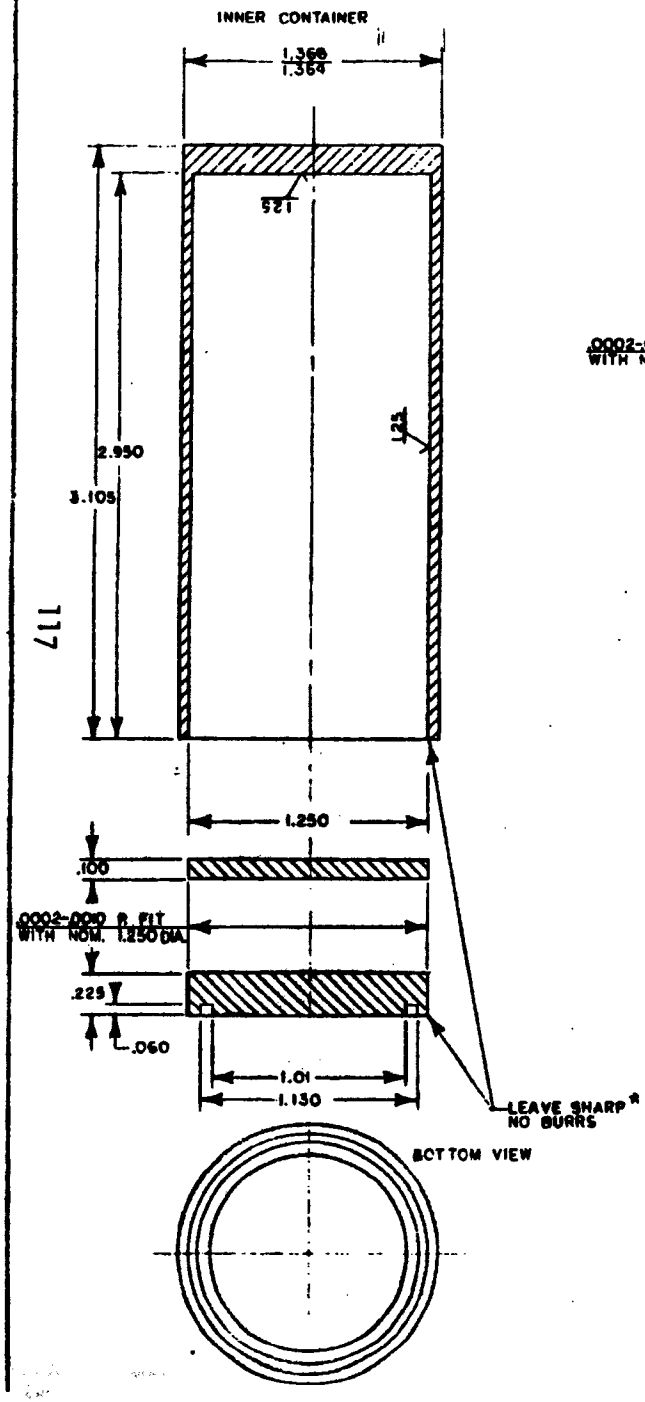

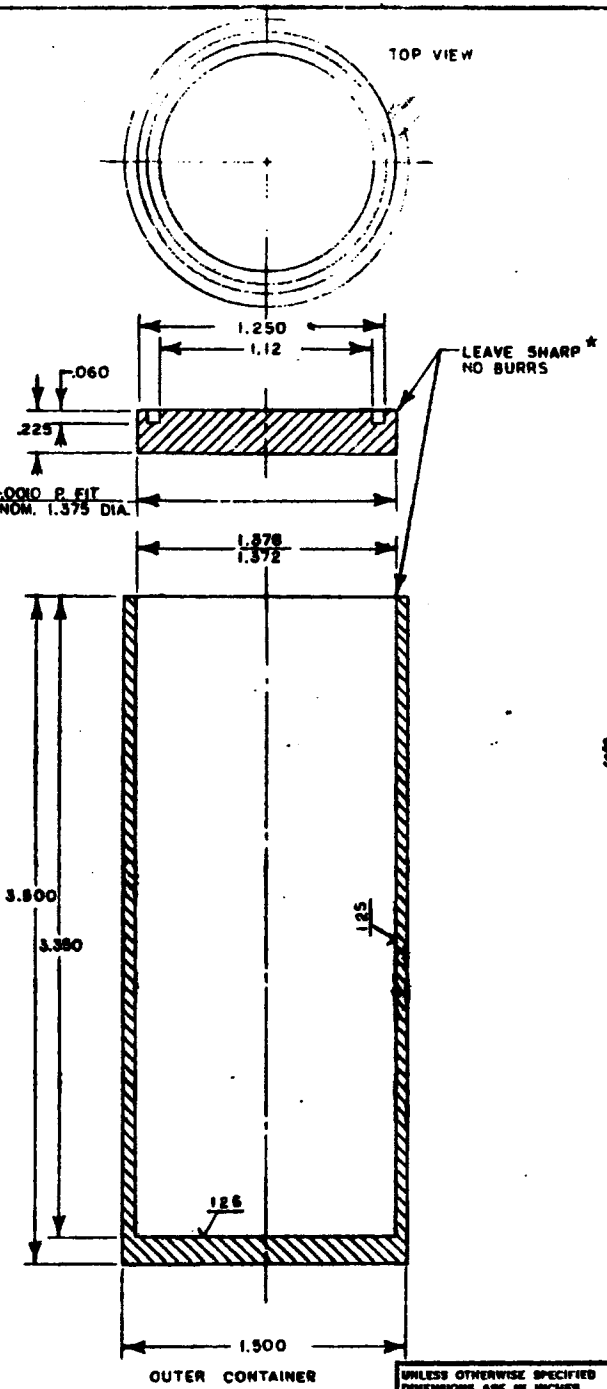

NOTES:

1. MIN WELD PENETRATION ~.045 FOR EACH CONTAINER.
2. UNLESS OTHER SPECIFIED: BREAK OUTSIDE CORNERS .010 - .020", RADIUS INSIDE CORNERS .010".
3. *INDICATES VISUAL INSPECTION IS ACCEPTABLE.
4. INNER CAPSULE TO BE INSERTED WELDED END FIRST INTO THE OUTER CAPSULE.
5. IF NECESSARY, S.S. SHIMS MAY BE PLACED BETWEEN INNER AND OUTER CONTAINER TO LIMIT MOVEMENT.

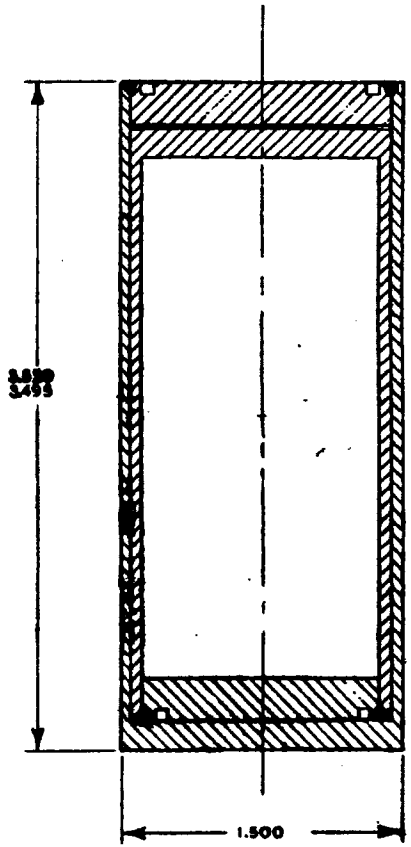

COMPLETED ASSEMBLY

DWG NO.	REV
SHEET OF	

NOTICE

This drawing is the property of Monsanto Research Corporation and must be returned, without reproduction or duplication, at any time upon request, but in any event at completion of the work or job. While in the possession of the recipient, it must be properly safeguarded against revelation or disclosure to anyone except those employees who require it for the work or job. The recipient must keep confidential, and require his (its) employees to keep confidential, the information contained herein.

UNLESS OTHERWISE SPECIFIED DIMENSIONS ARE IN INCHES	MS APPD	RRK	3-10-81
TOLERANCES: DECIMALS .XX = ± .02, .XXX = ± .005, .XXXX BASIC; FRACTIONS ±; ANGLES ± 30'	QA APPD	DFB	3/10/81
ALL SURFACES 32	MP APPD	HC	3/11/81
MATERIAL 304 S.S.	DE APPD	DFB	3/11/81
FINISH	CHECKED		
	DRAWN	HAM	3-6-81

MONSANTO RESEARCH CORPORATION
DAYTON LABORATORY
DAYTON, OHIO

NEUTRON SOURCE CONTAINER
MODEL 2728-C

DWG NO. C2728-CA00 REV 0

SCALE 2:1 WT CALC

REVISIONS			DE	MFG	QA	MS
SYM.	DESCRIPTION	DATE	APPROVAL			

NOTES:

1. UNLESS OTHERWISE SPECIFIED:
   BREAK OUTSIDE CORNERS .010 - .020"
   RADIUS INSIDE CORNERS .010
2. ALL CORNERS DESIGNATED WITH AN X SHALL BE LEFT SHARP*, NO BURRS.
3. *INDICATES VISUAL INSPECTION IS ACCEPTABLE.
4. INNER CAPSULE TO BE INSERTED WELDED END FIRST INTO THE OUTER CAPSULE.
5. IF NECESSARY, S.S. SHIMS MAY BE PLACED BETWEEN INNER AND OUTER CONTAINER TO LIMIT MOVEMENT.
6. MIN. WELD PENETRATION - .045" FOR EACH CONTAINER.

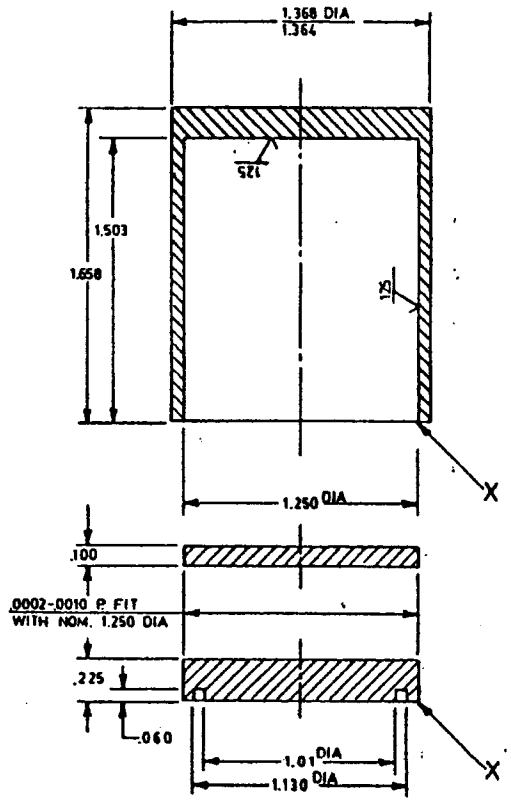

INNER CONTAINER

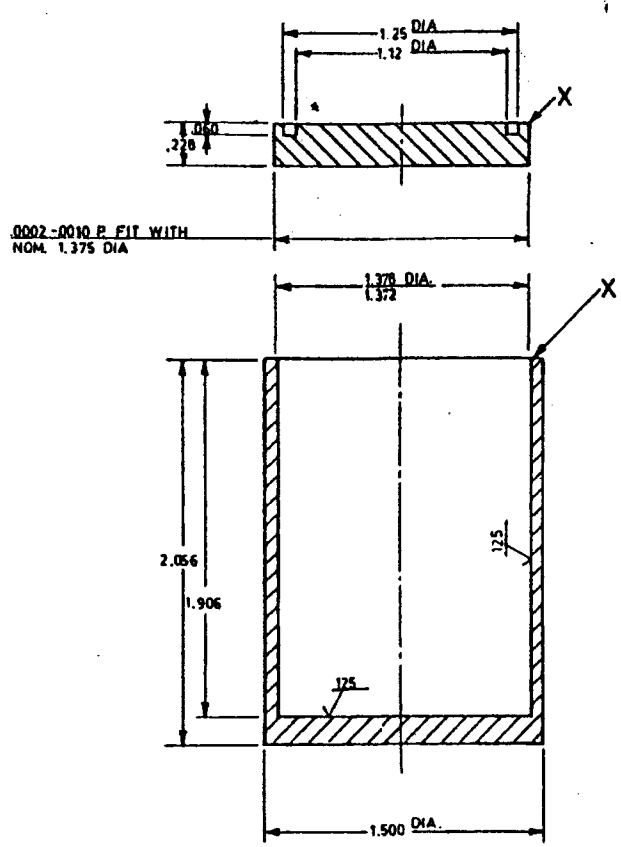

OUTER CONTAINER

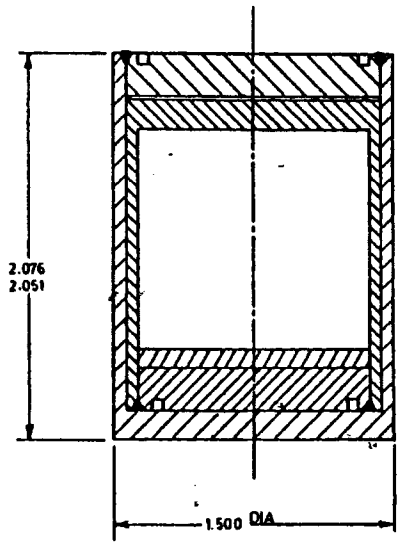

ASSEMBLY

DIMENSIONS ARE IN ☒ INCHES ☐ MILLIMETERS

UNLESS OTHERWISE SPECIFIED
TOLERANCES:
DECIMALS
.XX = ± .02
.XXX = ± .005
.XXXX BASIC
FRACTIONS ±
ANGLES ±
ALL SURFACES 32

MATERIAL 304 STAINLESS STEEL

MS	RRK	2-3-83
QA	CEY	2-9-83
MFG	HK	2/9/83
DE	JAB	2-11-83
DRAWN	HAM	2-7-83

APPROVALS

MONSANTO RESEARCH CORPORATION
DAYTON LABORATORY
DAYTON, OHIO

NEUTRON SOURCE CAPSULE MODEL 2729-C

DWG. NO. C2729-CA00 REV 0

U.S. Department
of Transportation

East Building, PHH-23
1200 New Jersey Avenue SE
Washington, D.C. 20590

**Pipeline and
Hazardous Materials
Safety Administration**

CERTIFICATE NUMBER: USA/0043/S-96, Revision 13

ORIGINAL REGISTRANT(S):

Gilbert Torres
Deputy Group Leader
Los Alamos National Laboratory
A194
LANL
Los Alamos, NM 87545

Ms. Cristy Abeyta
Technical Staff Member, Environmental Scientist
Los Alamos National Laboratory
P.O. Box 1663, Mail Stop: J552
Los Alamos National Laboratory
Los Alamos, 87545
USA

Donald Thorp
Group Leader
Los Alamos National Laboratory
A194
LANL
Los Alamos, NM 87545

REGISTERED USER(S):

Ms. Mary Shepherd
Vice President
J.L. Shepherd & Associates
1010 Arroyo Ave.
San Fernando, 91340-1822
USA

Mr. David Tucker
Senior Health Physicist
McMaster University
Health Physics, Nuclear Research Building
1280 Main Street West
Hamilton, NRB107
Canada

Mr. Dooley Buckner
Transportation Program Manager
Bechtel Jacobs Company
P.O. Box 4699
Oak Ridge, TN 37831

Mr. James R. Weldy, CHP
Radiation Safety Officer
Dow Chemical Company
1803 Building
Midland, 48674
USA

Wes Stilwell
Nuclear Fuel Transport Director
Westinghouse
Westinghouse Electric Company - Nuclear Fuel
Columbia Fuel Fabrication Facility
5801 Bluff Road
Hopkins, SC 29061

Tanya Sloma
Licensing, Compliance and Package Technology
Westinghouse
Westinghouse Electric Company - Nuclear Fuel
Columbia Fuel Fabrication Facility
5801 Bluff Road
Hopkins, SC 29061