U.S. Department
of Transportation

**Pipeline and
Hazardous Materials
Safety Administration**

East Building, PHH-21
1200 New Jersey Avenue SE
Washington, D.C. 20590

**COMPETENT AUTHORITY CERTIFICATION
FOR A TYPE B(U)
RADIOACTIVE MATERIALS PACKAGE DESIGN
CERTIFICATE USA/6217/B(U), REVISION 18**

**REVALIDATION OF CANADIAN COMPETENT AUTHORITY
CERTIFICATE CDN/2003/B(U)**

This certifies that the radioactive material package design described is hereby approved for use within the United States for import and export shipments only. Shipments must be made in accordance with the applicable regulations of the International Atomic Energy Agency[1] and the United States of America[2].

1. Package Identification - F-143 Transfer Case, Serial Nos. 20, 50, 53, 54, 59, 62 and 64; F-158 Transfer Case, Serial Nos. 3, 4, 5, 6, 8, 9, 10 and 14.

2. Package Description and Authorized Radioactive Contents - as described in Canadian Certificate of Competent Authority CDN/2003/B(U), Revision 16 (attached).

3. General Conditions -

   a. Each user of this certificate must have in his possession a copy of this certificate and all documents necessary to properly prepare the package for transportation. The user shall prepare the package for shipment in accordance with the documentation and applicable regulations.

   b. Each user of this certificate, other than the original petitioner, shall register his identity in writing to the Division of Engineering and Research, (PHH-20), Pipeline and Hazardous Materials Safety Administration, U.S. Department of Transportation, Washington D.C. 20590-0001.

   c. This certificate does not relieve any consignor or carrier from compliance with any requirement of the Government of any country through or into which the package is to be transported.

---

[1] "Regulations for the Safe Transport of Radioactive Material, 1996 Edition (Revised), No. TS-R-1 (ST-1, Revised)," published by the International Atomic Energy Agency(IAEA), Vienna, Austria.

[2] Title 49, Code of Federal Regulations, Parts 100-199, United States of America.

CERTIFICATE USA/6217/B(U), REVISION 18

4. Marking and Labeling - The package shall bear the marking USA/6217/B(U) in addition to other required markings and labeling.

5. Expiration Date - This certificate expires on March 31, 2016.

This certificate is issued in accordance with paragraph 816 of the IAEA Regulations and Section 173.473 of Title 49 of the Code of Federal Regulations, in response to the February 24, 2012 petition by Best Theratronics Ltd., Ottawa, Ontario, and in consideration of other information on file in this Office.

Certified By:

MAR 06 2012

Magdy El-Sibaie (DATE)
Associate Administrator for Hazardous Materials Safety

Revision 18 - Issued to revalidate Canadian Certificate of Competent Authority No. CDN/2003/B(U), Revision 16, and to extend the expiration date.

Canadian Certificate No.	Issue Date	Expiry Date	CNSC File
CDN/2003/B(U) (Rev. 16)	**Feb-08-2012**	**Mar-31-2016**	**30-A2-126-0**

Certificate
for
Transport Package Design

The transport package design identified below is certified by the Canadian Nuclear Safety Commission pursuant to paragraph 21(1)(h) of the *Nuclear Safety and Control Act* and Section 7 of the *Packaging and Transport of Nuclear Substances Regulations*, and to the 1973 Revised Edition (as amended) of the IAEA *Regulations for the Safe Transport of Radioactive Material.*

REGISTRATION OF USE OF PACKAGES

All users of this authorization shall register their identity in writing with the Canadian Nuclear Safety Commission prior to the first use of this authorization and shall certify that they possess the instructions necessary for preparation of the package for shipment.

PACKAGE IDENTIFICATION

Designer:	**Best Theratronics**
Make/Model:	**F-143 Transfer Case, Serial Nos. 20, 50, 53, 54, 59, 62, 64 and F-158 Transfer Case, Serial Nos. 3, 4, 5, 6, 8, 9, 10, 14**
Mode of Transport:	**Air, Sea, Road, Rail**

IDENTIFICATION MARK

The package shall bear the competent authority identification mark **"CDN/2003/B(U)"**.

PACKAGE DESCRIPTION

The packaging is comprised of a type F-143 Transfer Case with a fire shield as shown on Drawing No. F614301-001 (Rev. A) or a Type F-158 Transfer Case with a fire shield as shown on the illustrations listed on Identification List A06414 (Rev. B).

The transfer cases have a 250 mm thick lead-shielded, steel-encased inner container and are similar except for the shape and size of the source drawer. The source drawer of the F-158 is round or square and longer than the square drawer of the F-143. The containment system consists of the capsule assembly, the drawer assemblies, end blocks, hinged doors and the steel-encased lead-shielded inner container. The transfer case is covered on the top and sides by a shield constructed to provide fire and impact limiting properties and on the bottom by a steel encased "Transite" sheet attached to the shipping skid.

The outer box of the shield is reinforced sheet metal and envelopes a 45 mm thick layer of cedar lined by a sheet of 12.7 mm plywood. A nominal 12.7 mm air gap separates the plywood from a blanket of 12.7 mm refractory material which is bonded to a sheet metal box that forms the inside surface of the fireshield.

Canadian Certificate No.	Issue Date	Expiry Date	CNSC File
CDN/2003/B(U) (Rev. 16)	**Feb-08-2012**	**Mar-31-2016**	**30-A2-126-0**

An illustration of the package are shown on attached Drawing Nos. IN/SS 6076 F143 (Rev. 13) and IN/SS 1975 F158 (Rev. 8).

Any modification to the package design must be submitted to the Canadian Nuclear Safety Commission for approval prior to implementation.

The configuration of the F-143 Transfer Case is as follows:

Shape:	**Rectangular**	Shielding:	**Lead**
Mass:	**2080 kg**	Outer Casing:	**Steel**
Length:	**1118 mm**	Height:	**1245 mm**
Width:	**864 mm**	Diameter:	**n/a**

The configuration of the F-158 Transfer Case is as follows:

Shape:	**Rectangular**	Shielding:	**Lead**
Mass:	**2080 kg**	Outer Casing:	**Steel**
Length:	**1118 mm**	Height:	**1245 mm**
Width:	**864 mm**	Diameter:	**n/a**

AUTHORIZED RADIOACTIVE CONTENTS

This package is authorized to contain:

a) not more than 444 TBq (12,000 curies) of Cobalt 60 metal doubly encapsulated in C146 or C151 welded stainless steel capsules or in any doubly encapsulated stainless steel capsule assemblies or in any capsule which meets special form requirements. The decay heat output from this material shall not exceed 200 watts; or

b) not more than 296 TBq (8,000 curies) of Cesium 137 as "normal form" cesium chloride doubly encapsulated within C161 Type 2 or 3 welded stainless steel capsule assemblies. The decay heat output from this material shall not exceed 40 watts.

QUALITY ASSURANCE

Quality assurance for the use, maintenance and inspection of the package shall be in accordance with:

- Best Theratronics Specification No. IN/DS 2574 F143/F158 (1), "Design and Operating Specification for

Canadian Certificate No.	Issue Date	Expiry Date	CNSC File
CDN/2003/B(U) (Rev. 16)	**Feb-08-2012**	**Mar-31-2016**	**30-A2-126-0**

the F-143 and F-158 Transport Packages"

- Best Theratronics Specification No. 5.05-QA-01(2)*, "Radioactive Material Transport Package Quality Plan"
- Best Theratronics Document No. IN/IM 2548 F000 (3)*, "Radioactive Material Transport Packaging Inspection and Maintenance Procedure"
- Packaging and Transport of Nuclear Substances Regulations
- IAEA Regulations
- * or latest current revision

SHIPMENT

The preparation for shipment of the package shall be in accordance with:

- Best Theratronics Specification No. IN/DS 2574 F143/F158 (1), "Design and Operating Specification for the F-143 and F-158 Transport Packages"
- Best Theratronics Document No. IN/PP 1521 F143/F158 (B), "Preparation for Shipment of F-143 and F-158 Type B(U) Radioactive Material Transport Package"
- Packaging and Transport of Nuclear Substances Regulations
- IAEA Regulations

This certificate does not relieve the consignor from compliance with any requirement of the government of any country through or into which the package will be transported.

S. Faille
Designated Officer pursuant to paragraph 37(2)(a)
of the Nuclear Safety and Control Act

Notes

1. CNSC certification CDN/2003/B(U)
2. Conforms to IAEA type B(U)
3. Shielding - 25.4 cm (10.0 in.) lead - steel encased
4. Gross weight - 2,080 kg (4590 lb.)
   Fire shield weight - 227 kg (500 lb.)
5. Floor loading (based on projected floor area) - 0.216 kg/cm² (442 lb/ft²)
6. This container is used for shipping beam therapy unit sources (square drawer type only)
7. End blocks - F197 - for drawer prod. no. G143A, G172, G173 and G173A - 2.54 cm (1.0 in.) thick
   - F195 - for drawer prod. no. G643, G674, G675 and G675A - 2.69 cm (1.06 in.) thick
   - F194 - for drawer prod. no. G343, G344 and G344A - 6.50 cm (2.56 in.) thick
   - F193 - for drawer prod. no. G243, G272, G273 and G273A - 4.45 cm (1.75 in.) thick
   - F196 - for Siemens model SHDI-T2-82 and SENTW-1-120 - 10.57 cm (4.12 in.) thick

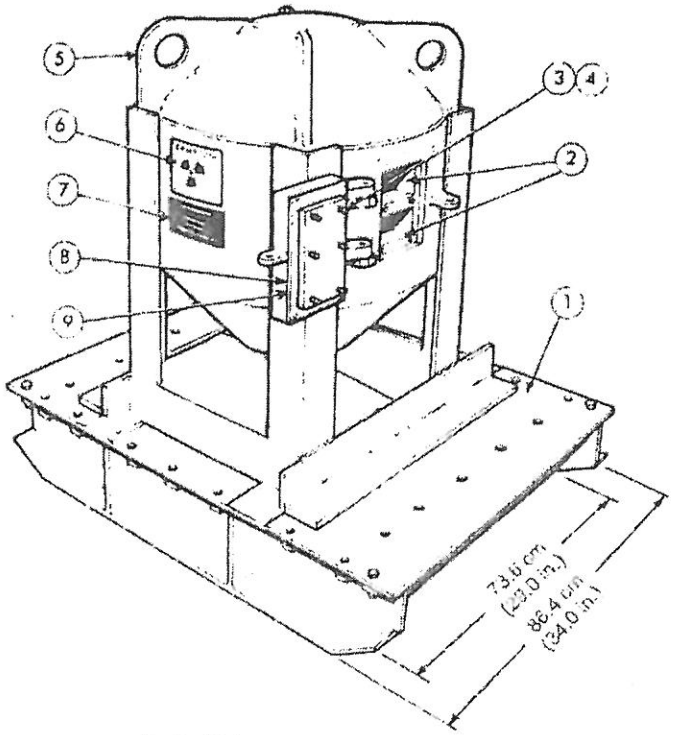

CAPACITY

MATERIAL	COBALT-60	CAESIUM-137
Max. Capacity	12,000 Ci	8,000 Ci.

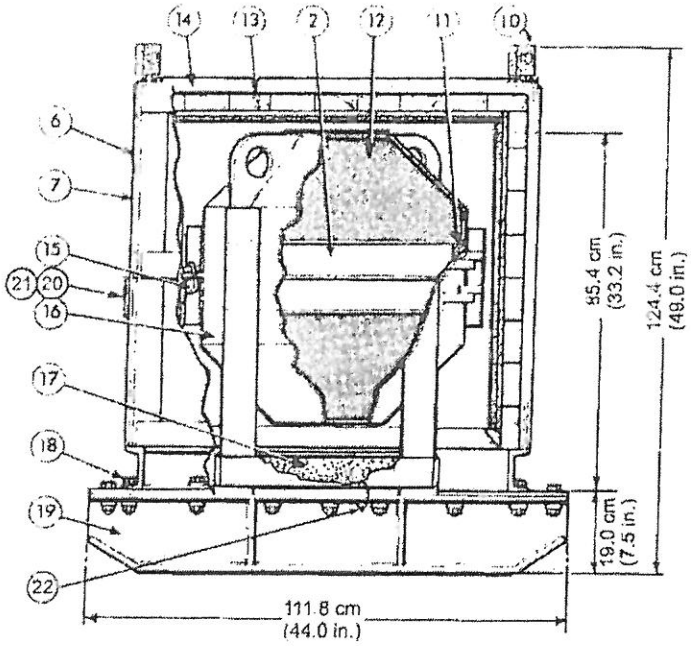

Parts List

1. Removable plate (2) - with steel encased transite
2. Drawer chambers - 7.6 cm square x 59.0 cm long (3.0 in. square x 23.25 in. long)
3. Socket head screw (12) - ½ - 13 x 2 in.
4. Gasket - O-ring type (12)
5. Container lift lug (4)
6. Radiation caution plate (3) - on two opposite sides of fireshield and one on the transfer case
7. Shipping container identification label (4) - on two opposite sides of fireshield and on two opposite sides of transfer case
8. Hinged door (2)
9. Neoprene gasket (2)
10. Fireshield lifting handles with covers installed
11. End blocks (4) - see note 7
12. Lead shielding
13. Fireshield - cedar plywood - kaowool, steel box (inner)
14. Outer steel box on fireshield
15. Wire seal (2)
16. Steel jacket 0.63 cm (1/4 in.)
17. Vermiculite packing
18. Hex bolt (24) - ½ - 13 x 2 ½ in. long
19. Shipping skid
20. Radioactive category label (2) - on two opposite sides
21. UN number label (2) - on two opposite sides, next to radioactive category labels
22. Lead wire seal (1)

NOV 08 2010

Best Theratronics
413 March Road
Ottawa, Ontario
Canada, K2K 0E4
Tel. (613) 591-2100

TITLE

F-143 Type B(U) Transport Package

REF. TC-1-1(TC-1-38) IN/SS 6078 F143		REVISED Nov. 10	DC 30466
DATE November 1983		No. F-143	ISSUE 13
DRAWN	CHECKED BM	APPROVED BM	SHEET 1 OF 1

THIS DRAWING IS THE PROPERTY OF BEST THERATRONICS LTD. AND IS SUBMITTED FOR CONSIDERATION ON THE UNDERSTANDING THAT THERE SHALL BE NO EXPLOITATION OF ANY INFORMATION CONTAINED HEREIN EXCEPT WITH THE SPECIFIC WRITTEN AGREEMENT OF BEST THERATRONICS LTD.

U.S. Department
of Transportation

**Pipeline and
Hazardous Materials
Safety Administration**

**East Building, PHH-23
1200 New Jersey Avenue SE
Washington, D.C. 20590**

CERTIFICATE NUMBER: USA/6217/B(U)-85, Revision 18

ORIGINAL REGISTRANT(S):

Dr. Richard Wassenaar, PhD
Radiation Safety Officer
Best Theratronics Ltd.
Best Theratronics Ltd.
413 March Road
Ottawa, K2K 0E4
Canada

Gwen McCaffrey
QA Coordinator
Best Theratronics Ltd.
Best Theratronics
413 March Road
Ottawa, K2K 0E4
Canada