U.S. Department
of Transportation

**Pipeline and
Hazardous Materials
Safety Administration**

East Building, PHH-23
1200 New Jersey Avenue Southeast
Washington, D.C. 20590

IAEA CERTIFICATE OF COMPETENT AUTHORITY
SPECIAL FORM RADIOACTIVE MATERIALS
CERTIFICATE USA/0729/S-96, REVISION 1

This certifies that the source described has been demonstrated to meet the regulatory requirements for special form radioactive material as prescribed in the regulations of the International Atomic Energy Agency[1] and the United States of America[2] for the transport of radioactive material.

1. Source Identification - QSA Global, Inc. Model XN43 (Manufactured on or after October 12, 1981).

2. Source Description - Cylindrical single encapsulation made of stainless steel and tungsten inert gas or laser seal welded. Approximate outer dimensions are 22.2 mm (0.87 in.) in diameter and 8.3 mm (0.33 in.) in length. Minimum wall thickness is 0.2 mm (0.008 in.). Construction shall be in accordance with attached AEA Technology QSA, Inc. Drawing No. RBA62221, Rev. A.

3. Radioactive Contents - No more than 74.0 GBq (2.0 Ci) of Americium-241. The Am-241 is in the form of an oxide incorporated into a ceramic matrix.

4. Quality Assurance - Records of Quality Assurance activities required by Paragraph 310 of the IAEA regulations[1] shall be maintained and made available to the authorized officials for at least three years after the last shipment authorized by this certificate. Consignors in the United States exporting shipments under this certificate shall satisfy the applicable requirements of Subpart H of 10 CFR 71.

5. Expiration Date - This certificate expires on January 31, 2016.

---

[1] "Regulations for the Safe Transport of Radioactive Material, 1996 Edition (Revised), No. TS-R-1 (ST-1, Revised)," published by the International Atomic Energy Agency(IAEA), Vienna, Austria.

[2] Title 49, Code of Federal Regulations, Parts 100-199, United States of America.

CERTIFICATE USA/0729/S-96, REVISION 1

This certificate is issued in accordance with paragraph 804 of the IAEA Regulations and Section 173.476 of Title 49 of the Code of Federal Regulations, in response to the January 04, 2011 petition by QSA Global, Inc., Burlington, MA, and in consideration of other information on file in this Office.

Certified By:

Dr. Magdy El-Sibaie
Associate Administrator for Hazardous Materials Safety

Jan 13 2011
(DATE)

Revision 1 - Issued to extend the expiration date.

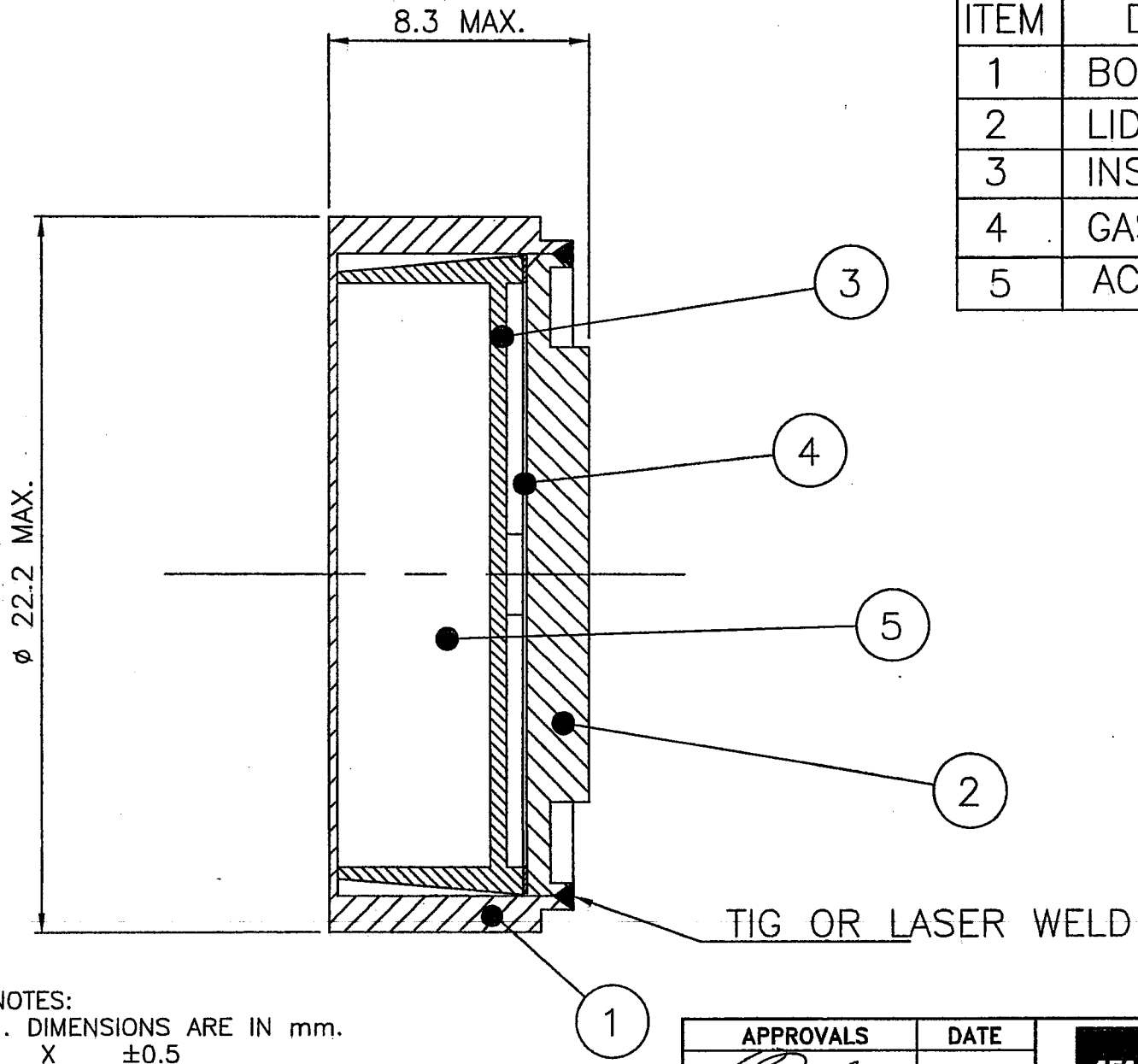

ITEM	DESCRIPTION	QTY.
1	BODY STAIN. STL.	1
2	LID STAIN. STL.	1
3	INSERT STAIN. STL.	1
4	GASKET COPPER	1
5	ACTIVE MATERIAL	—

NOTES:
1. DIMENSIONS ARE IN mm.
   X ±0.5
   X.X ±0.2
   X.XX ±0.10

APPROVALS	DATE
[illegible]	12 Jan 06
[illegible]	12/14/06

UNLESS OTHERWISE SPECIFIED
DIMENSIONS IN INCHES
TOLERANCES:
FRACTIONS ± 1/8
X.X ± 0.12
X.XX ± 0.06
X.XXX ± 0.020

AEA TECHNOLOGY QSA
40 NORTH AVE, BURLINGTON, MA 01803

DESCRIPTIVE DRAWING

TITLE XN43 CAPSULE ASSEMBLY

SIZE	DWG. NO.	REV
A	RBA62221	A
	SCALE: 5:1	SHEET 1 OF 1

ERF #	1204

U.S. Department
of Transportation

**Pipeline and
Hazardous Materials
Safety Administration**

**East Building, PHH-23
1200 New Jersey Avenue SE
Washington, D.C. 20590**

CERTIFICATE NUMBER: USA/0729/S-96, Revision 1

ORIGINAL REGISTRANT(S):

Ms. Lori Podolak
Product Licensing Specialist
QSA Global, Inc.
40 North Avenue
Burlington, MA 01803

Ms. Cathleen Roughan
Director, Regulatory Affairs and QA
QSA Global, Inc.
40 North Avenue
Burlington, MA 01803

Mr. Michael Fuller
Regulatory Compliance Associate
QSA Global, Inc.
40 North Avenue
Burlington, MA 01803