U.S. Department
of Transportation

**Pipeline and
Hazardous Materials
Safety Administration**

East Building, PHH-23
1200 New Jersey Avenue Southeast
Washington, D.C. 20590

IAEA CERTIFICATE OF COMPETENT AUTHORITY
SPECIAL FORM RADIOACTIVE MATERIALS
CERTIFICATE USA/0705/S-96, REVISION 1

This certifies that the source described has been demonstrated to meet the regulatory requirements for special form radioactive material as prescribed in the regulations of the International Atomic Energy Agency[1] and the United States of America[2] for the transport of radioactive material.

1. Source Identification - QSA Global, Inc. Model XN28 (Manufactured on or after September 21, 1996).

2. Source Description - Rectangular double encapsulation with a cylindrical extension made of stainless steel and tungsten inert gas or laser seal welded. Approximate outer dimensions are 22.3 mm (0.88 in.) in height, 25.4 mm (1.0 in.) in width, and 10.2 mm (0.4 in.) in overall depth. Minimum wall thickness of the outer encapsulation is 0.04 mm (0.002 in.). Construction shall be in accordance with attached AEA Technology QSA, Inc. Drawing Number RBA10236, Rev. B.

3. Radioactive Contents - No more than 18.5 GBq (0.5 Ci) of Strontium-90. The Sr-90 is in the form of a ceramic enamel.

4. Quality Assurance - Records of Quality Assurance activities required by Paragraph 310 of the IAEA regulations[1] shall be maintained and made available to the authorized officials for at least three years after the last shipment authorized by this certificate. Consignors in the United States exporting shipments under this certificate shall satisfy the applicable requirements of Subpart H of 10 CFR 71.

5. Expiration Date - This certificate expires on December 31, 2014.

---

[1] "Regulations for the Safe Transport of Radioactive Material, 1996 Edition (Revised), No. TS-R-1 (ST-1, Revised)," published by the International Atomic Energy Agency(IAEA), Vienna, Austria.

[2] Title 49, Code of Federal Regulations, Parts 100-199, United States of America.

CERTIFICATE USA/0705/S-96, REVISION 1

This certificate is issued in accordance with paragraph 804 of the IAEA Regulations and Section 173.476 of Title 49 of the Code of Federal Regulations, in response to the December 01, 2009 petition by QSA Global, Inc., Burlington, MA, and in consideration of other information on file in this Office.

Certified By:

Dr. Magdy El-Sibaie
Acting Associate Administrator for Hazardous Materials Safety

Dec 08 2009
(DATE)

Revision 1 - Issued to extend the expiration date and to update corporate name.

ENLARGED CELL DETAIL
SCALE 2/1

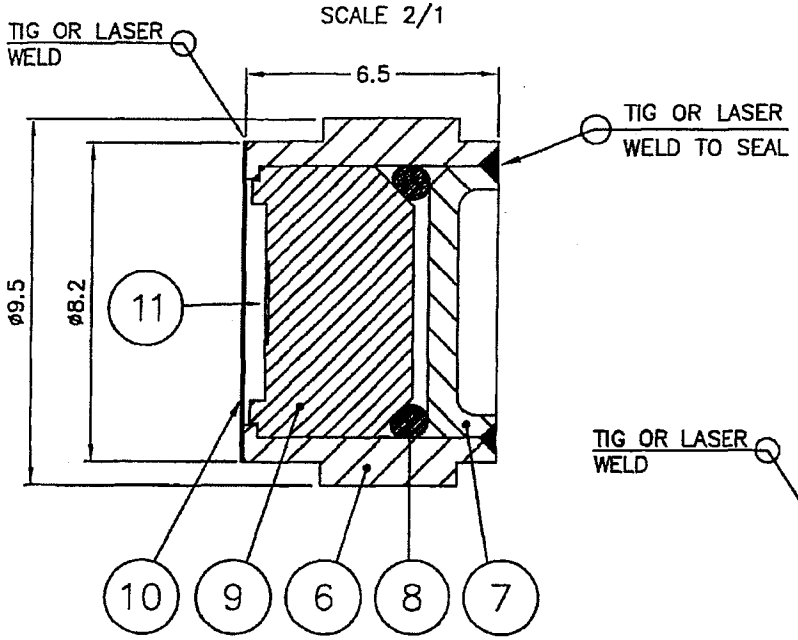

ITEM	DESCRIPTION		QTY
1	SHEATH BODY	STAIN. STL	1
2	WINDOW FRAME	STAIN. STL	1
3	SHEATH WINDOW	STAIN. STL	1
4	SHEATH GASKET	SILVER	1
5	SHEATH LID	STAIN. STL	1
6	CELL BODY	STAIN. STL	1
7	CELL LID	STAIN. STL	1
8	CELL GASKET	SILVER WIRE ø1	A/R
9	CELL INSERT	ALUMINA	1
10	CELL WINDOW	STAIN. STL	1
11	ACTIVE MATERIAL		A/R

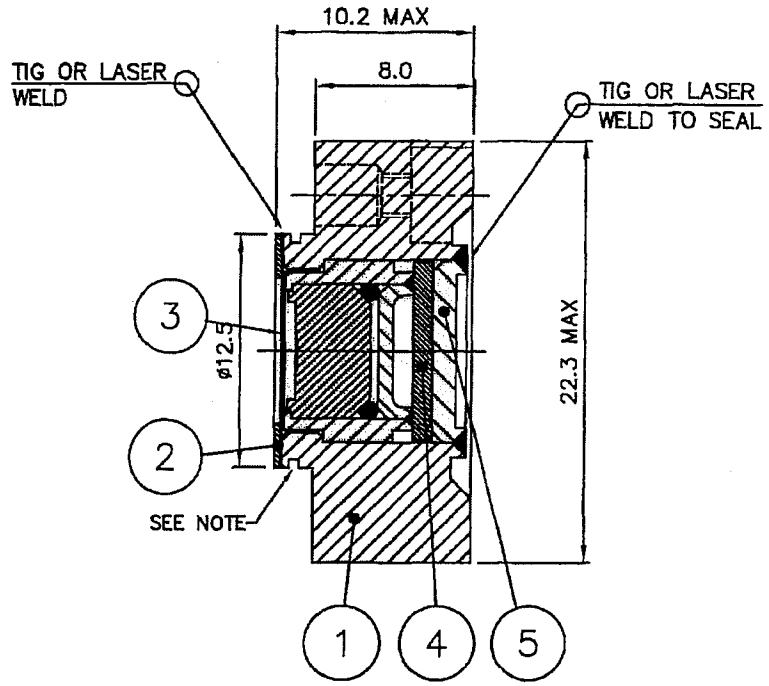

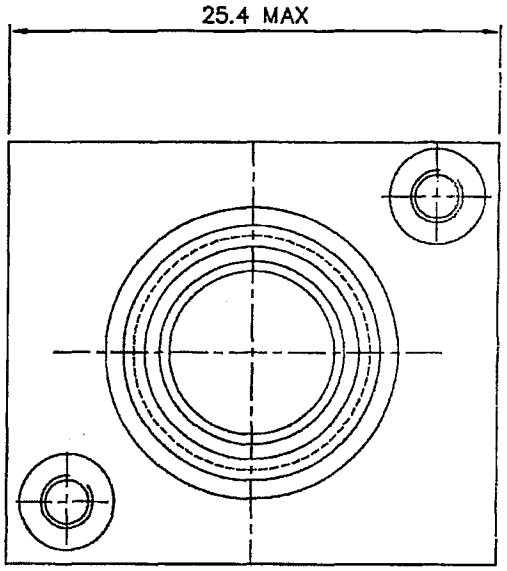

NOTE: RECESS NOT PRESENT ON ALL CAPSULES

ERF #	1008

APPROVALS	
[illegible]	3/7/05
[illegible]	7 Mar 05

DIMENSIONS IN MILLIMETERES
UNLESS OTHERWISE STATED TOLERANCES:

X ±0.5
X.X ±0.1
X.XX ±0.05
ANGULAR ±5°

INTERNAL N7
EXTERNAL N6

AEA TECHNOLOGY QSA
40 NORTH AVE, BURLINGTON, MA 01803

DESCRIPTIVE DRAWING

TITLE XN28 CAPSULE ASSEMBLY

SIZE	DWG. NO.	REV
A	RBA10236	B
	SCALE: NONE / SHEET 1 OF 1	

U.S. Department
of Transportation

**Pipeline and
Hazardous Materials
Safety Administration**

**East Building, PHH-23
1200 New Jersey Avenue SE
Washington, D.C. 20590**

CERTIFICATE NUMBER: USA/0705/S-96, Revision 1

ORIGINAL REGISTRANT(S):

Ms. Lori Podolak
Product Licensing Specialist
QSA Global, Inc.
40 North Avenue
Burlington, MA 01803

Ms. Cathleen Roughan
Director, Regulatory Affairs and QA
QSA Global, Inc.
40 North Avenue
Burlington, MA 01803

Mr. Michael Fuller
Regulatory Compliance Associate
QSA Global, Inc.
40 North Avenue
Burlington, MA 01803