U.S. Department
of Transportation

**Pipeline and
Hazardous Materials
Safety Administration**

**East Building, PHH-23
1200 New Jersey Avenue Southeast
Washington, D.C. 20590**

**COMPETENT AUTHORITY CERTIFICATION
FOR A TYPE B(U)
RADIOACTIVE MATERIALS PACKAGE DESIGN
CERTIFICATE USA/0587/B(U)-85, REVISION 3**

**REVALIDATION OF CANADIAN COMPETENT AUTHORITY
CERTIFICATE CDN/2067/B(U)-85**

This certifies that the radioactive material package design described is hereby approved for use within the United States for import and export shipments only. Shipments must be made in accordance with the applicable regulations of the International Atomic Energy Agency[1] and the United States of America[2].

1. Package Identification - Gammacell 40 MK3 Irradiator, (Shipped in the 20WC-5 Overpack, Serial Nos. 1A, 1B, 2A, 2B, 3A, 3B).

2. Package Description and Authorized Radioactive Contents - as described in Canada Certificate of Competent Authority CDN/2067/B(U)-85, Revision 6 (attached).

3. General Conditions -

   a. Each user of this certificate must have in his possession a copy of this certificate and all documents necessary to properly prepare the package for transportation. The user shall prepare the package for shipment in accordance with the documentation and applicable regulations.

   b. Each user of this certificate, other than the original petitioner, shall register his identity in writing to the Office of Hazardous Materials Technology, (PHH-23), Pipeline and Hazardous Materials Safety Administration, U.S. Department of Transportation, Washington D.C. 20590-0001.

   c. This certificate does not relieve any consignor or carrier from compliance with any requirement of the Government of any country through or into which the package is to be transported.

---

[1] "Regulations for the Safe Transport of Radioactive Material, 1996 Edition (Revised), No. TS-R-1 (ST-1, Revised)," published by the International Atomic Energy Agency(IAEA), Vienna, Austria.

[2] Title 49, Code of Federal Regulations, Parts 100-199, United States of America.

CERTIFICATE USA/0587/B(U)-85, REVISION 3

d. Records of Quality Assurance activities required by Paragraph 310 of the IAEA regulations[1] shall be maintained and made available to the authorized officials for at least three years after the last shipment authorized by this certificate. Consignors in the United States exporting shipments under this certificate shall satisfy the applicable requirements of Subpart H of 10 CFR 71.

4. Marking and Labeling - The package shall bear the marking USA/0587/B(U)-85 in addition to other required markings and labeling.

5. Expiration Date - This certificate expires on February 29, 2016.

This certificate is issued in accordance with paragraph 817 of the IAEA Regulations and Section 173.473 of Title 49 of the Code of Federal Regulations, in response to the February 23, 2012 petition by Best Theratronics Ltd., Ottawa, Ontario, and in consideration of other information on file in this Office.

Certified By:

Mar 15 2012
(DATE)

Dr. Magdy El-Sibaie
Associate Administrator for Hazardous Materials Safety

Revision 3 - Issued to revalidate Canadian Certificate of Competent Authority No. CDN/2067/B(U)-85, Revision 6, and to extend the expiration date.

Canadian Nuclear Safety Commission | Commission canadienne de sûreté nucléaire

Canadian Certificate No.	Issue Date	Expiry Date	CNSC File
CDN/2067/B(U)-85 (Rev. 6)	**Feb-22-2012**	**Feb-29-2016**	**30-A2-175-0**

Certificate
for
Transport Package Design

The transport package design identified below is certified by the Canadian Nuclear Safety Commission pursuant to paragraph 21(1)(h) of the *Nuclear Safety and Control Act* and Section 7 of the *Packaging and Transport of Nuclear Substances Regulations*, and to the 1985 Edition (As Amended 1990) of the IAEA *Regulations for the Safe Transport of Radioactive Material.*

REGISTRATION OF USE OF PACKAGES

All users of this authorization shall register their identity in writing with the Canadian Nuclear Safety Commission prior to the first use of this authorization and shall certify that they possess the instructions necessary for preparation of the package for shipment.

PACKAGE IDENTIFICATION

Designer:	**Best Theratronics**
Make/Model:	**Gammacell 40 MK3 Irradiator, (Shipped in the 20WC-5 Overpack, Serial Nos. 1A, 1B, 2A, 2B, 3A, 3B)**
Mode of Transport:	**Air, Sea, Road, Rail**

IDENTIFICATION MARK

The package shall bear the competent authority identification mark **"CDN/2067/B(U) - 85"**.

PACKAGE DESCRIPTION

The Gammacell 40 MK3 Irradiator, as described on Drawing Nos. C104002-071 (Issue C) and C104002-098 (Issue C), consists of two steel-encased, 152 mm thick lead-shielded source heads. Each head is completely wrapped within Kaowool thermal insulation encased in polyethylene sheet. Each wrapped head is installed in the cavity of a USDOT specification 20WC-5 package as shown on Drawing No. C104010-010 (Issue D). The containment system for each source head consists of the source capsule, the source drawer, the shipping end plate and spacer, and the steel-encased lead-shielded body. There are two packages (upper and lower head respectively) in each shipment.

An illustration of the package is shown on attached Drawing No. GC-40-MK3, (Rev. 4).

Any modification to the package design must be submitted to the Canadian Nuclear Safety Commission for approval prior to implementation.

Canada

The configuration of the package is as follows:

Shape:	**Drum**	Shielding:	**Lead**
Mass:	**1740 kg**	Outer Casing:	**n/a**
Length:	**n/a**	Height:	**1041 mm**
Width:	**n/a**	Diameter:	**1306 mm**

AUTHORIZED RADIOACTIVE CONTENTS

The package is authorized to contain a maximum of 148 TBq (4,000 Ci) of Cesium 137 in the form of cesium chloride compressed powder pellets contained within two MDS Nordion C161 Type 8 or Reviss Type R6100 (MDS Nordion C-440) double-walled welded stainless steel capsules (one capsule in each irradiator head) meeting the requirements for special form radioactive material.

QUALITY ASSURANCE

Quality assurance for the design, manufacture, testing, documentation, use, maintenance and inspection of the package shall be in accordance with:

- Best Theratronics Specification No. IN/TS 1268 GC40E+ (E), "Technical Specification Gammacell 40E+ Radiation Shield Assembly"
- Best Theratronics Document No. 5.05-QA-01(2)*, "Radioactive Material Transport Package Quality Plan"
- Best Theratronics Document No. IN/IM 2548 F000(3), "Transport Package Maintenance Overview Procedure"
- Packaging and Transport of Nuclear Substances Regulations
- IAEA Regulations
- * or latest current revision

SHIPMENT

The preparation for shipment of the package shall be in accordance with:

- Best Theratronics Document No. IN/PP 0272 GC40MK3, (Issue 11), "Preparation for Shipment of the

GC-40, GC-40E and GC-40E+ in the GC-40 MK3 Transport Package (20WC-5)"

- Packaging and Transport of Nuclear Substances Regulations
- IAEA Regulations

This certificate does not relieve the consignor from compliance with any requirement of the government of any country through or into which the package will be transported.

S. Faille
Designated Officer pursuant to paragraph 37(2)(a)
of the Nuclear Safety and Control Act

Canada

Notes

1. CNSC Certificate CDN/2067/B(U)-85
2. Conforms to IAEA Type B(U) requirements
3. Overpack to US DOT Specification 20WC-5 to 49 CFR 178.362
4. Shoring assembly required for upper head only
5. Both heads covered with insulating blanket of 25.4 mm (1 in.) Kaowool encased in 4 mil polyethylene
6. Items 3 and 13 also attached to heads after covering with Kaowool
7. Overpack cavity size: 889 mm dia. x 635 mm high (35.0 in. x 25.0 in.)
8. Total weight: 1,737 kg (3,830 lb.)
9. Projected floor loading: 1,296 kg/m² (266 lb./ft.²)

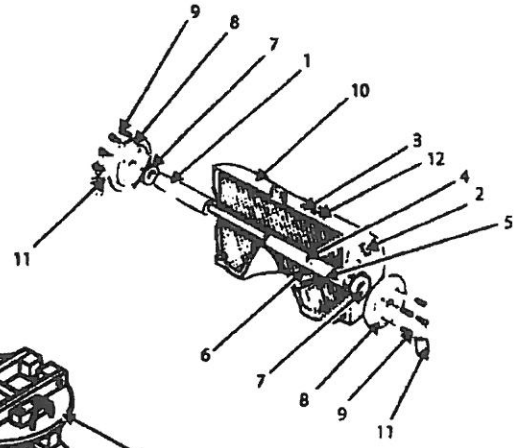

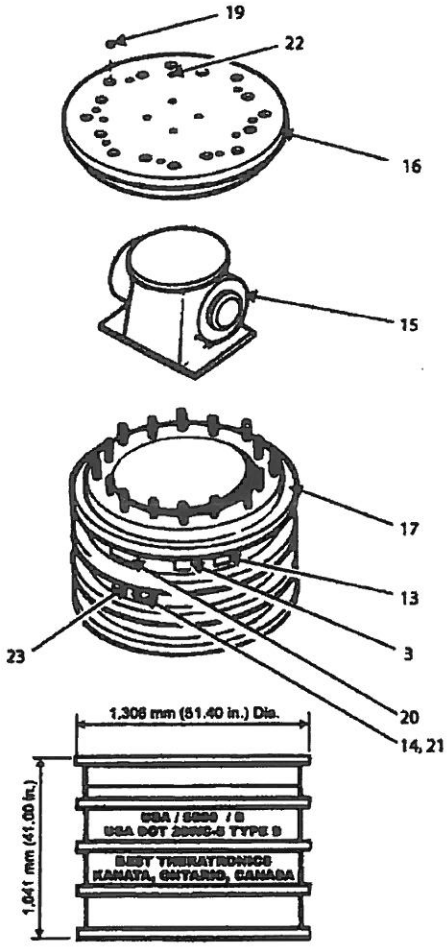

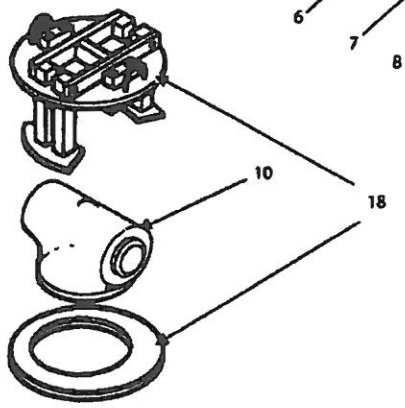

Parts List

1. Shipping spacer
2. Radiation caution plate - specified contents (2) (Drawing A00511)
3. Best Theratronics identification plate (8) (Drawing A01828)
4. Cesium-137 source in storage position
5. Source drawer - lead filled - brass encased
6. Lead shielding - 152 mm (6 in.)
7. Locking ring (4)
8. Shipping end plate
9. 3/8 in. - 16 x 1-3/4 in. long socket HD screws (16)
10. Upper head
11. 'DANGER' cardboard tag (2T00548) (4)
12. Danger label (2T000502) (2)
13. Radiation caution plate - unspecified contents (4) (Drawing A03621)
14. Category label (2)
15. Lower head
16. Overpack lid
17. Overpack body
18. Upper head shoring assembly
19. Nut, 5/8 - 18 steel (16)
20. Labelling plate #1 (2)
21. Labelling plate #2 (2)
22. 3/8 in. threaded insert (3) and plugs (3)
23. UN number label (2); one next to each of the radioactive category labels

NOV 0 8 2010

Best® Theratronics

413 March Road
Ottawa, Ontario
Canada, K2K 0E4
Tel: (613) 591-2100

TITLE

GC40 MK3 Transport Packaging Upper and Lower Heads Only

REF. IN/SS 1985 GC40-MK3 C104010-010	REVISED Nov. 10	DC 30486
DATE FEB 1993	No. GC-40-MK3	ISSUE 4
DRAWN BW / CHECKED BM / APPROVED BM	SHEET 1 OF 1	

THIS DRAWING IS THE PROPERTY OF BEST THERATRONICS LTD. AND IS SUBMITTED FOR CONSIDERATION ON THE UNDERSTANDING THAT THERE SHALL BE NO EXPLOITATION OF ANY INFORMATION CONTAINED HEREIN EXCEPT WITH THE SPECIFIC WRITTEN AGREEMENT OF BEST THERATRONICS LTD.

U.S. Department
of Transportation

**Pipeline and
Hazardous Materials
Safety Administration**

**East Building, PHH-23
1200 New Jersey Avenue SE
Washington, D.C. 20590**

CERTIFICATE NUMBER: USA/0587/B(U)-85, Revision 3

ORIGINAL REGISTRANT(S):

Dr. Richard Wassenaar, PhD
Radiation Safety Officer
Best Theratronics Ltd.
Best Theratronics Ltd.
413 March Road
Ottawa, K2K 0E4
Canada

Gwen McCaffrey
QA Coordinator
Best Theratronics Ltd.
Best Theratronics
413 March Road
Ottawa, K2K 0E4
Canada