U.S. Department
of Transportation

**Pipeline and
Hazardous Materials
Safety Administration**

1200 New Jersey Avenue, S.E.
Washington, D.C. 20590

IAEA CERTIFICATE OF COMPETENT AUTHORITY
SPECIAL FORM RADIOACTIVE MATERIALS
CERTIFICATE USA/0517/S-96, REVISION 3

This certifies that the sources described have been demonstrated to meet the regulatory requirements for special form radioactive material as prescribed in the regulations of the International Atomic Energy Agency[1] and United States of America[2] for the transport of radioactive material.

1. Source Identification - Eckert & Ziegler Isotope Products source capsule Models 3224-04, 3224-14, 3901-1 and 3901-2.

2. Source Description - Cylindrical single encapsulations made of Type 304 or 304L stainless steel (Models 3224-04 and 3901-2) or titanium (Models 3224-14 and 3901-1) with a 0.25 mm (0.010 in.) thick integral window at one end and fusion seal welded. Approximate outer dimensions are 3.0 mm (0.12 in.) in diameter and 5.0 mm (0.2 in.) in length. Construction of the Models 3224-04 and 3224-14 shall be in accordance with either attached IPL Drawing No. 3224, Rev. B, Sheet 3 of 6 or Drawing No. 3224-REG, Rev. -, Sheet 1 of 1. Construction of the Models 3901-1 and 3901-2 shall be in accordance with either attached IPL Drawing No. 3901, Rev. -, Sheet 3 of 5 or Drawing No. 3901-REG, Rev. -, Sheet 1 of 1.

3. Radioactive Contents - The sources described by this certificate are authorized to contain any one of the following radionuclides limited to the activity shown. The radionuclides are in the form of chlorides, nitrates, or oxides in ceramic or resin bead; oxides in gold or aluminum; or metal plated onto substrate. The Na-22 may also be in the form of NaCl in gold. The Ge-68 may also be in the form of GeO_2 in silver. The Sr-90 may also be in the form of $SrTiO_4$ in silver. The Ba-133 may also be in the form of $BaSo_4$ in ceramic.

Radionuclide	Activity MBq	(mCi)
Na-22	185	(5)
Co-57	11,100	(300)
Co-58	11,100	(300)
Co-60	370	(10)
Ge-68	1,850	(50)
Sr-90	4,625	(125)
Ru-106	1,850	(50)
Ba-133	3,700	(100)
Cs-137	11,100	(300)
Ra-226	1,850	(50)
Lanthanides*	11,100	(300)
Actinides**	11,100	(300)

* (Isotopes of Ce, Pr, Sm, Eu, Gd, Tm, and Yb only)
** (Isotopes of Ac, Th, Pa, U, Pu, Am, and Cm only)

4. Quality Assurance - Records of Quality Assurance activities required by paragraph 310 of the IAEA regulations[1] shall be maintained and made available to the authorized officials for at least three years after the last shipment authorized by this certificate. Consignors in the United States exporting shipments under this certificate shall satisfy the requirements of Subpart H of 10 CFR 71.

---

[1] "Regulations for the Safe Transport of Radioactive Material, 1996 Edition (Revised), No. TS-R-1 (ST-1, Revised)," published by the International Atomic Energy Agency (IAEA), Vienna, Austria.

[2] Title 49, Code of Federal Regulations, Parts 100 - 199, United States of America.

CERTIFICATE USA/0517/S-96, REVISION 3

5. Expiration Date - This certificate expires on January 31, 2016.

This certificate is issued in accordance with paragraph 804 of the IAEA Regulations and Section 173.476 of Title 49 of the Code of Federal Regulations, in response to the January 14, 2011 petition by Eckert & Ziegler Isotope Products, Valencia, CA, and in consideration of other information on file in this Office.

Certified by:

Dr. Magdy El-Sibaie
for Associate Administrator for
Hazardous Materials Safety

JAN 25 2011
(DATE)

Revision 3 - Issued to update corporate name and radioactive contents and to extend the expiration date.

GROUP #4

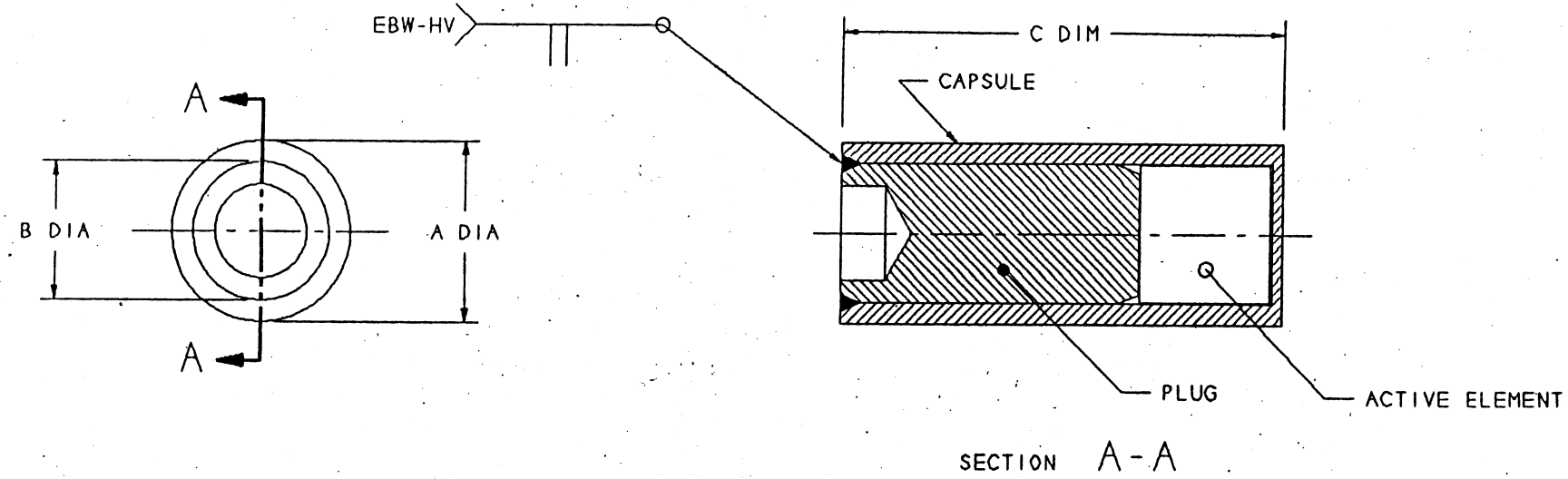

TABLE 1			
Y	A DIA	B DIA	C DIM
1	0.118	0.080	0.394
2	0.157	0.120	0.394
3	0.275	0.187	0.394
4	0.118	0.098	0.197

TABLE 2	
X	MATERIAL
0	304 or 304L STAINLESS STEEL
1	TITANIUM

P/N: A3224-XY ASSEMBLY

5. INDIVIDUALLY PACKAGE AND IDENTIFY PART NUMBER THEREON
4. ENGRAVE SERIAL NUMBER - CHARACTER HEIGHT 0.062 AND 0.005 MAX DEPTH
3. TOLERANCES: 0.XXX ±0.002. 0.XX ±0.01. 0.X ±0.1. ANGLE ±0.5°
2. DIMENSIONS ARE IN INCHES
1. ASSEMBLE COMPLETE PER ENGINEERING DRAWING AND FUSION WELD AS REQUIRED

NOTE: UNLESS OTHERWISE SPECIFIED

THIS DRAWING IS THE PROPERTY OF ISOTOPE PRODUCTS LABORATORIES, AND MAY NOT BE USED, REPRODUCED, PUBLISHED OR DISCLOSED TO OTHERS WITHOUT EXPRESS AUTHORIZATION BY ISOTOPE PRODUCTS LABORATORIES.

ISOTOPE PRODUCTS LABORATORIES
BURBANK, CALIFORNIA 91504

SCALE: NTS	APPROVED: Michael Devine	DESIGNED: JMD/RLT
DATE: 01/11/94		REV/CHG: B
TITLE: INDUSTRIAL PHOTON SOURCE		SHEET: 3 OF 6
SERIES: GFS & XFB SOURCES		DRAWING NUMBER 3224

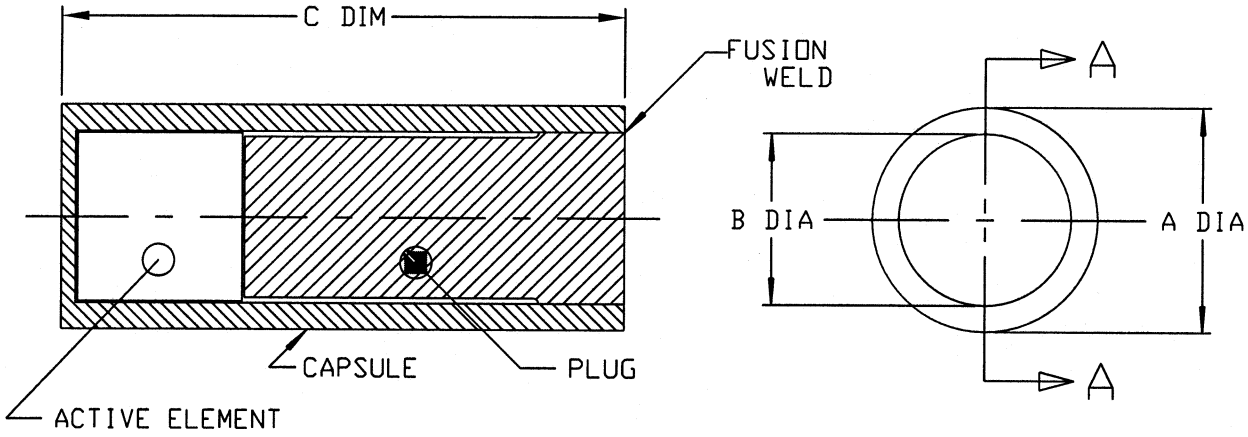

SECTION A-A

P/N: 3224-XY ASSEMBLY

TABLE 1	
X	MATERIAL
0	304 or 304L STAINLESS STEEL
1	TITANIUM

TABLE 2			
Y	A DIA	B DIA	C DIM
1	0. 12	0. 08	0. 39
2	0. 16	0. 12	0. 39
3	0. 28	0. 19	0. 39
4	0. 12	0. 10	0. 20
5	0. 08	0. 05	0. 39

1. ASSEMBLE COMPLETE PER ENGINEERING DRAWING AND FUSION WELD AS REQUIRED

NOTE: UNLESS OTHERWISE SPECIFIED

Isotope Products Laboratories
An Eckert & Ziegler Company
VALENCIA, CALIFORNIA 91355

DESIGN	DRAWING TITLE			
LZ/DI	GFS INDUSTRIAL PHOTON SOURCE			
SCALE	SERIES TITLE			
NONE	INDUSTRIAL SOURCES, GFS AND XFB			
SIZE	CAGE CODE	REVISION	DRAWING NUMBER	SHEET
A	32993	-	3224-REG	1 OF 1

GROUP #3

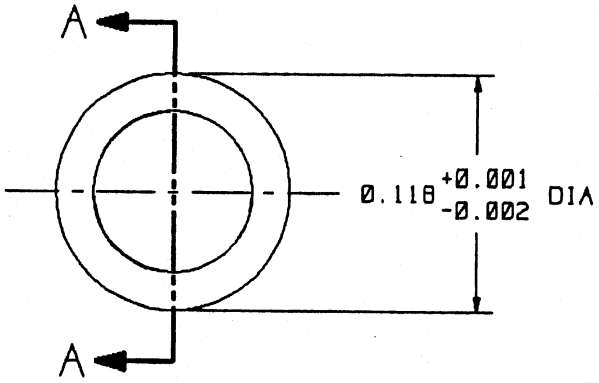

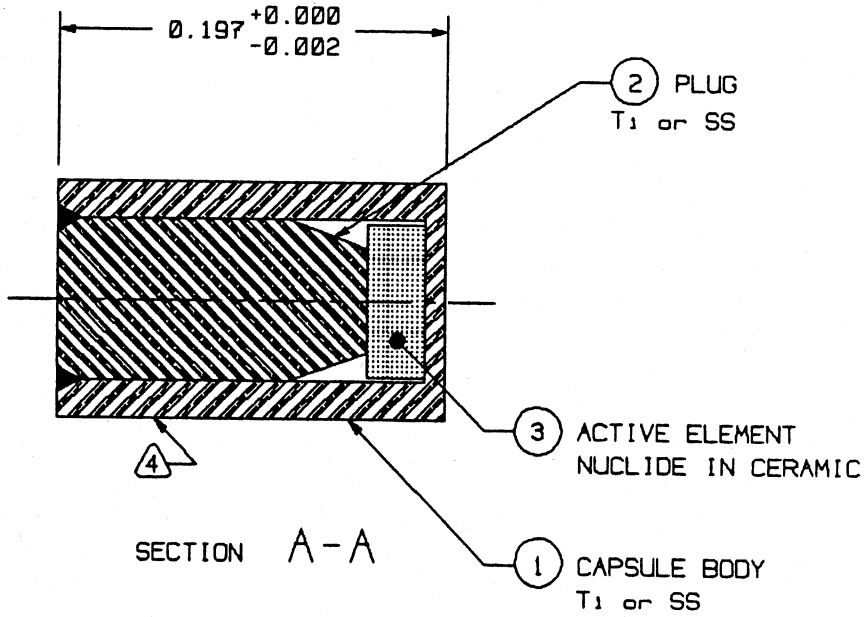

SECTION A-A

P/N: A3901-X ASSEMBLY

X	MATERIAL
1	TITANIUM
2	304 OR 304L SS

5. INDIVIDUALLY PACKAGE AND IDENTIFY PART NUMBER THEREON
4. ENGRAVE: IPL, NUCLIDE, ACTIVITY, SERIAL NUMBER CHARACTER HEIGHT 0.040 AND 0.003 MAX DEPTH
3. TOLERANCES: 0.XXX ±0.002, 0.XX ±0.01, 0.X ±0.1, ANGLE ±0.5°
2. DIMENSIONS ARE IN INCHES
1. ASSEMBLE COMPLETE PER ENGINEERING DRAWING AND FUSION WELD AS REQUIRED

NOTE: UNLESS OTHERWISE SPECIFIED

THIS DRAWING IS THE PROPERTY OF ISOTOPE PRODUCTS LABORATORIES, AND MAY NOT BE USED, REPRODUCED, PUBLISHED OR DISCLOSED TO OTHERS WITHOUT EXPRESS AUTHORIZATION BY ISOTOPE PRODUCTS LABORATORIES.

ISOTOPE PRODUCTS LABORATORIES
BURBANK, CALIFORNIA 91504

SCALE: NTS	APPROVED: M. Devine 12/20/94	DESIGNED: JMD/RLT
DATE: 09/15/94		REV/CHD: -
TITLE: GAUGING SOURCE		SHEET: 3 OF 5
SERIES: CUSTOM SOURCES (290 SERIES)		DRAWING NUMBER 3901

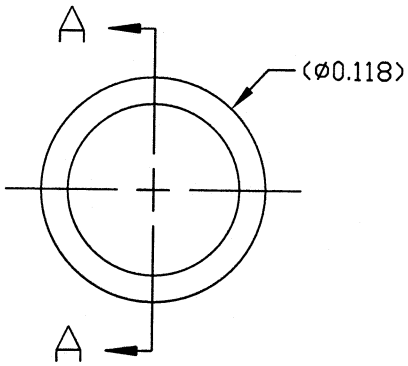

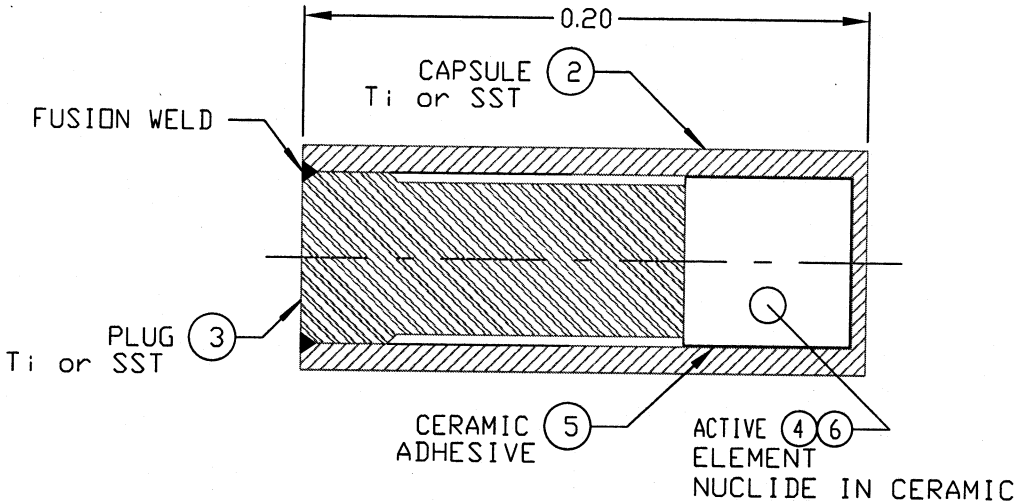

SECTION A–A

X	MATERIAL
1	TITANIUM
2	304 OR 304L STAINLESS STEEL

1. ASSEMBLE COMPLETE PER ENGINEERING DRAWING
   ADD CERAMIC ADHESIVE TO PREVENT RATTLING
   FUSION WELD AS REQUIRED

NOTE: UNLESS OTHERWISE SPECIFIED

P/N: A3901-X ASSEMBLY

ISOTOPE PRODUCTS LABORATORIES
BURBANK, CALIFORNIA 91504

DESIGN	DRAWING TITLE			
JMD/RLT	GAUGING SOURCE			
SCALE	SERIES TITLE			
NONE	INDUSTRIAL SOURCES, CUSTOM			
SIZE	CAGE CODE	REVISION	DRAWING NUMBER	SHEET
A	32993	-	3901-REG	1 of 1

U.S. Department
of Transportation

**Pipeline and
Hazardous Materials
Safety Administration**

**East Building, PHH-23
1200 New Jersey Avenue SE
Washington, D.C. 20590**

CERTIFICATE NUMBER: USA/0517/S-96, Revision 3

ORIGINAL REGISTRANT(S):

Ms. Frida Tan
Regulatory Affairs Manager
Eckert & Ziegler Isotope Products
24937 Avenue Tibbitts
Valencia, 91355
USA