U.S. Department
of Transportation

**Pipeline and
Hazardous Materials
Safety Administration**

1200 New Jersey Avenue, S.E.
Washington, D.C. 20590

IAEA CERTIFICATE OF COMPETENT AUTHORITY
SPECIAL FORM RADIOACTIVE MATERIALS
CERTIFICATE USA/0516/S-96, REVISION 3

This certifies that the sources described have been demonstrated to meet the regulatory requirements for special form radioactive material as prescribed in the regulations of the International Atomic Energy Agency[1] and United States of America[2] for the transport of radioactive material.

1. Source Identification - Eckert & Ziegler Isotope Products (EZIP) source capsule Models 3224-01, 3224-02, 3224-03, 3224-11, 3224-12, 3224-13, and 3807.

2. Source Description - Cylindrical single encapsulations made of Type 304 or 304L stainless steel or titanium, with a 0.25 mm (0.010 in.) thick integral window at one end, and fusion seal welded. Approximate outer dimensions of the 3224 models are either 3.0 mm (0.12 in.), 4.0 mm (0.16 in.), or 7.0 mm (0.28 in.) in diameter and 10.0 mm (0.39 in.) in length. Approximate outer dimensions of the 3807 model are 3.0 mm (0.12 in.) in diameter and 10.2 mm (0.4 in.) in length. Construction of the 3224 models shall be in accordance with attached Eckert & Ziegler Isotope Products Drawing No. 3224-SFC0516, Rev. -, Sheet 1 of 1. Construction of the 3807 model shall be in accordance with attached Isotope Products Laboratories Drawing No. 3807, Rev. B, Sheet 3 of 6.

3. Radioactive Contents - The sources described by this certificate are authorized to contain any one of the following radionuclides limited to the activity shown. The radionuclides are in the form of chlorides, nitrates, or oxides in ceramic or resin bead; oxides in gold or aluminum; or metal plated onto substrate. The Na-22 may also be in the form of NaCl in gold. The Ge-68 may also be in the form of GeO_2 in silver. The Sr-90 may also be in the form of $SrTiO_4$ in silver. The Ba-133 may also be in the form of $BaSo_4$ in ceramic.

Radionuclide	Activity MBq	(mCi)
Na-22	185	(5)
Co-57	11,100	(300)
Co-58	11,100	(300)
Co-60	370	(10)
Ge-68	1,850	(50)
Sr-90	4,625	(125)
Ru-106	1,850	(50)
Ba-133	3,700	(100)
Cs-137	11,100	(300)
Ra-226	1,850	(50)
Lanthanides*	11,100	(300)
Actinides**	11,100	(300)

* (Isotopes of Ce, Pr, Sm, Eu, Gd, Tm, and Yb only)
** (Isotopes of Ac, Th, Pa, U, Pu, Am, and Cm only)

---

[1] "Regulations for the Safe Transport of Radioactive Material, 1996 Edition (Revised), No. TS-R-1 (ST-1, Revised)," published by the International Atomic Energy Agency (IAEA), Vienna, Austria.

[2] Title 49, Code of Federal Regulations, Parts 100 - 199, United States of America.

CERTIFICATE USA/0516/S-96, REVISION 3

4. Quality Assurance - Records of Quality Assurance activities required by paragraph 310 of the IAEA regulations[1] shall be maintained and made available to the authorized officials for at least three years after the last shipment authorized by this certificate. Consignors in the United States exporting shipments under this certificate shall satisfy the requirements of Subpart H of 10 CFR 71.

5. Expiration Date - This certificate expires on March 31, 2016.

This certificate is issued in accordance with paragraph 804 of the IAEA Regulations and Section 173.476 of Title 49 of the Code of Federal Regulations, in response to the February 22, 2011 petition by Eckert & Ziegler Isotope Products, Valencia, CA, and in consideration of other information on file in this Office.

Certified by:

APR 14 2011

(DATE)

Dr. Magdy El-Sibaie
Associate Administrator for
Hazardous Materials Safety

Revision 3 - Issued to update corporate name, radioactive contents, and description; and to extend the expiration date.

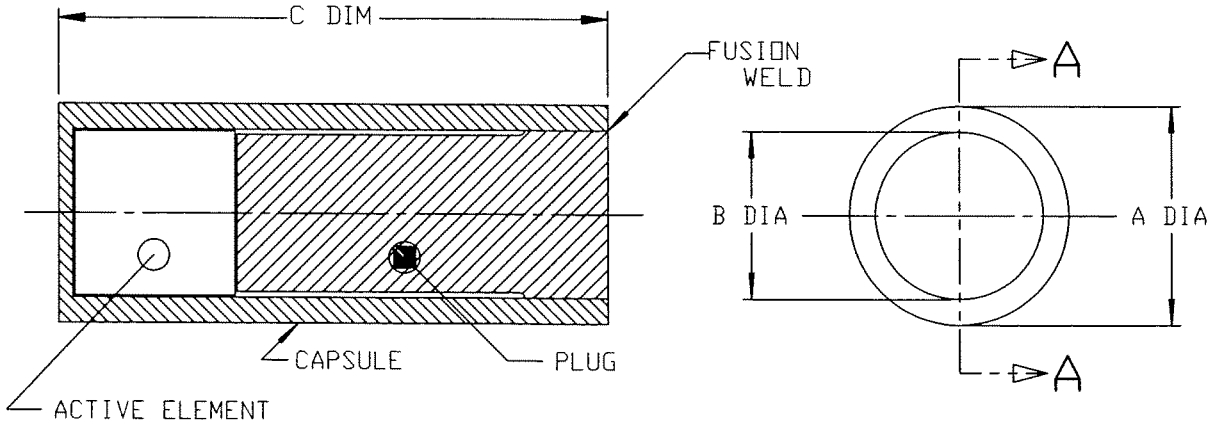

SECTION A-A

TABLE 1	
X	MATERIAL
0	304 or 304L STAINLESS STEEL
1	TITANIUM

TABLE 2			
Y	A DIA	B DIA	C DIM
1	0.12	0.08	0.39
2	0.16	0.12	0.39
3	0.28	0.19	0.39

P/N: 3224-XY ASSEMBLY

1. ASSEMBLE COMPLETE PER ENGINEERING DRAWING AND FUSION WELD AS REQUIRED

NOTE: UNLESS OTHERWISE SPECIFIED

Eckert & Ziegler Isotope Products

VALENCIA, CALIFORNIA 91355

DESIGN	DRAWING TITLE			
LZ/DI	GFS INDUSTRIAL PHOTON SOURCE			
SCALE	SERIES TITLE			
NONE	INDUSTRIAL SOURCES, GFS AND XFB			
SIZE	CAGE CODE	REVISION	DRAWING NUMBER	SHEET
A	32993	-	3224-SFC0516	1OF1

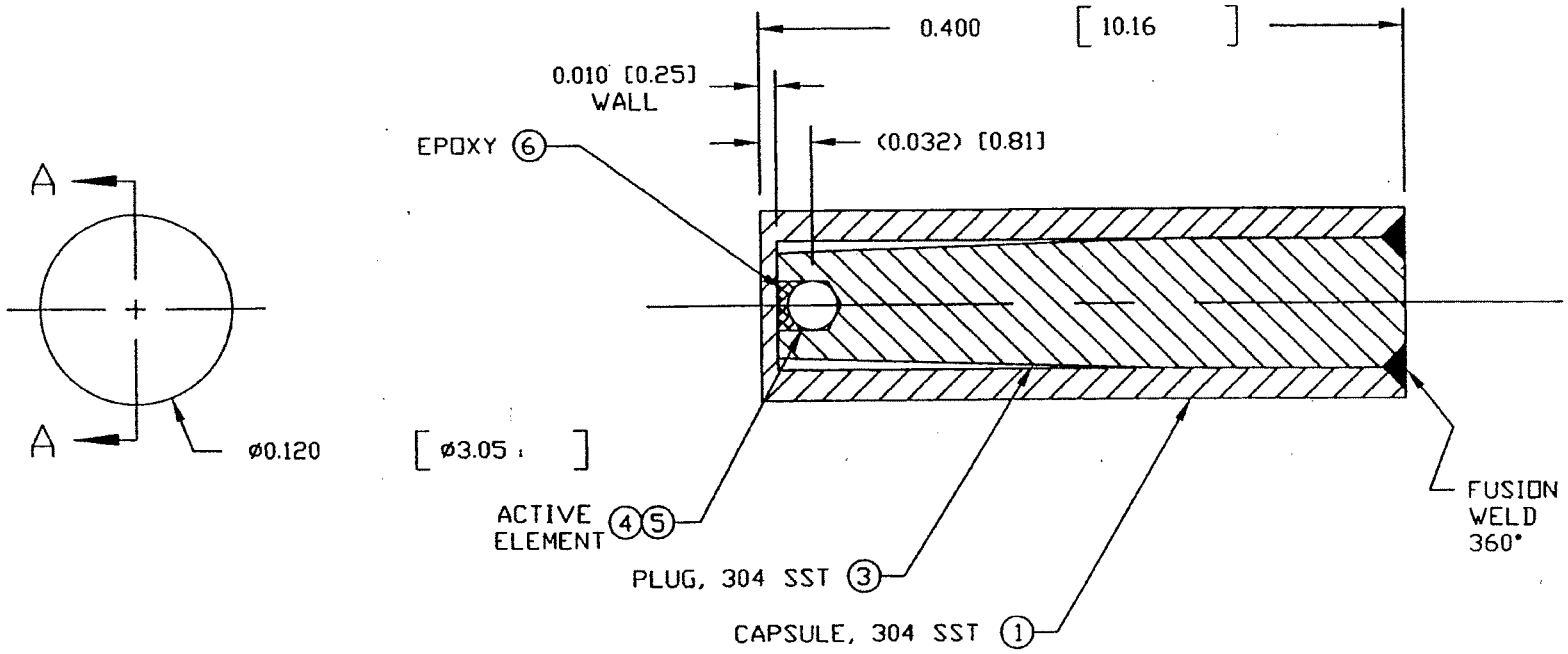

SECTION A–A

2. METRIC DIMENSIONS [mm] ARE IN MILLIMETERS.
1. ASSEMBLE COMPLETE PER ENGINEERING DRAWING.

NOTES: UNLESS OTHERWISE SPECIFIED

3807 ASSEMBLY

Isotope Products Laboratories An Eckert & Ziegler Company VALENCIA, CALIFORNIA 91355	DRAWN EW 12-JAN-87 ME/CHECKER KA 16-JAN-87 ENGR EW 12-JAN-87 SCALE NONE / SIZE A	TITLE Co-57 SOURCE AMERSHAM X. 101/2 CAPSULE DRAWING NO. 3807 SERIES TITLE INDUSTRIAL SOURCES, CUSTOM	REV B SHEET 3 OF 6

U.S. Department
of Transportation

**Pipeline and
Hazardous Materials
Safety Administration**

**East Building, PHH-23
1200 New Jersey Avenue SE
Washington, D.C. 20590**

CERTIFICATE NUMBER: USA/0516/S-96, Revision 3

ORIGINAL REGISTRANT(S):

Ms. Frida Tan
Regulatory Affairs Manager
Eckert & Ziegler Isotope Products
24937 Avenue Tibbitts
Valencia, 91355
USA