U.S. Department of Transportation

Pipeline and Hazardous Materials Safety Administration

1200 New Jersey Avenue, S.E.
Washington, D.C. 20590

IAEA CERTIFICATE OF COMPETENT AUTHORITY
SPECIAL FORM RADIOACTIVE MATERIALS
CERTIFICATE USA/0357/S-96, REVISION 9

This certifies that the sources described have been demonstrated to meet the regulatory requirements for special form radioactive material as prescribed in the regulations of the International Atomic Energy Agency[1] and United States of America[2] for the transport of radioactive material.

1. Source Identification - Eckert & Ziegler Isotope Products (EZIP) source capsule Models 3203 and 3214.

2. Source Description - Cylindrical single encapsulations made of Type 304 or 304L stainless steel, with a 0.05 mm (0.002 in.) thick window at one end, and fusion seal welded. Approximate outer dimensions are 7.9 mm (0.312 in.) in diameter and 5.1 mm (0.200 in.) in length. Construction shall be in accordance with attached EZIP Drawing No. 3203, Rev. G, Sheet 3 of 6 (Model 3203); or Isotope Products Laboratories Drawing No. A3214, Rev. A (Model 3214).

3. Radioactive Contents - The sources described by this certificate are authorized to contain any one of the following radionuclides limited to the activity shown. The radionuclides are in the form of chlorides, nitrates, or oxides in ceramic; oxides in gold or aluminum; or metal plated onto substrate. The Na-22 may also be in the form of NaCl in gold or ceramic. The Ge-68 may also be in the form of GeO_2 in silver. The Sr-90 may also be in the form of $SrTiO_4$ in silver. The Ba-133 may also be in the form of $BaSo_4$ in ceramic.

Radionuclide	Activity MBq	(mCi)
Na-22	185	(5)
Co-57	11,100	(300)
Co-58	11,100	(300)
Co-60	370	(10)
Ge-68	1,850	(50)
Sr-90	4,625	(125)
Ru-106	1,850	(50)
Ba-133	3,700	(100)
Cs-137	11,100	(300)
Ra-226	1,850	(50)
Lanthanides*	11,100	(300)
Actinides**	1,110	(30)

* (Isotopes of Ce, Pr, Sm, Eu, Gd, Tm, and Yb only)
** (Isotopes of Ac, Th, Pa, U, Pu, Am, and Cm only)

4. Quality Assurance - Records of Quality Assurance activities required by paragraph 310 of the IAEA regulations[1] shall be maintained and made available to the authorized officials for at least three years after the last shipment authorized by this certificate. Consignors in the United States exporting shipments under this certificate shall satisfy the requirements of Subpart H of 10 CFR 71.

---

[1] "Regulations for the Safe Transport of Radioactive Material, 1996 Edition (Revised), No. TS-R-1 (ST-1, Revised)," published by the International Atomic Energy Agency (IAEA), Vienna, Austria.

[2] Title 49, Code of Federal Regulations, Parts 100 - 199, United States of America.

CERTIFICATE USA/0357/S-96, REVISION 9

5. Expiration Date - This certificate expires on March 31, 2016.

This certificate is issued in accordance with paragraph 804 of the IAEA Regulations and Section 173.476 of Title 49 of the Code of Federal Regulations, in response to the February 11, 2011 petition by Eckert & Ziegler Isotope Products, Valencia, CA, and in consideration of other information on file in this Office.

Certified by:

MAR 15 2011

Dr. Magdy El-Sibaie
Associate Administrator for
Hazardous Materials Safety

(DATE)

Revision 9 - Issued to update corporate name, radioactive contents, and drawing; and to extend the expiration date.

X	ACTIVE ELEMENT SIZE
0	0.000" DIA X 0.000" NO HOLE
1	0.125" DIA X 0.030"
2	0.187" DIA X 0.020"
3	0.210" DIA X 0.040"
4	0.250" DIA X 0.040"

ITEM #	DESCRIPTION
1	ASSEMBLY
3	CAPSULE BODY
4	WINDOW
5	SHIELD
6	PLUG
7	ACTIVE ELEMENT

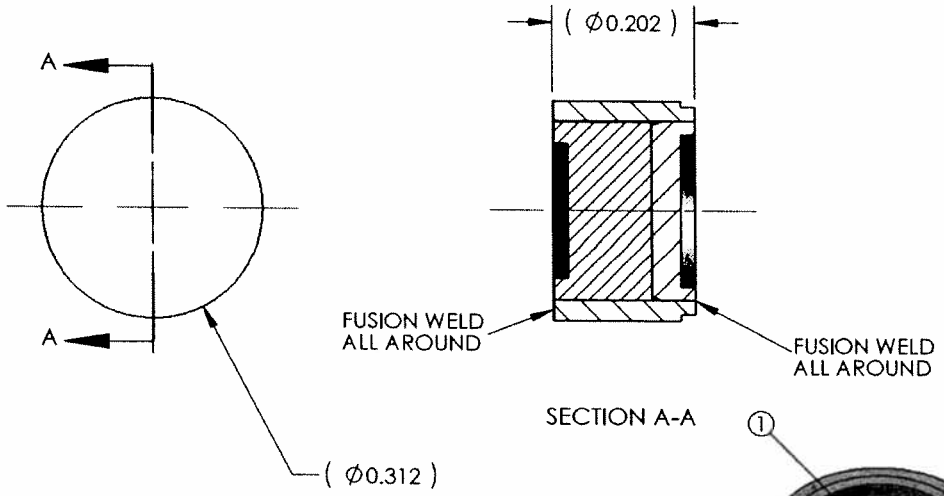

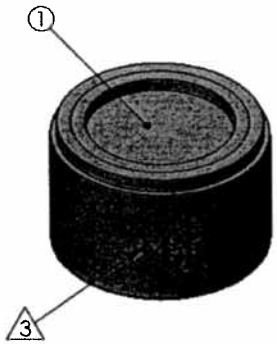

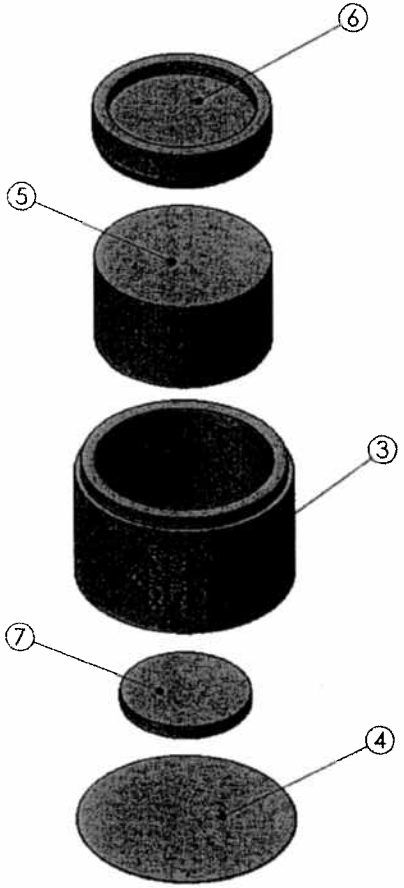

3. ENGRAVE CHARACTERS 0.003 DEEP MAX
CENTERED ON CIRCUMFERENCE OF 3203-1;
IPL
ISOTOPE
ACTIVITY
SERIAL NUMBER
2. PACKAGE AND IDENTIFY PART NUMBER THERE ON
1. ASSEMBLE PER ENGINEERING DRAWING
NOTES: UNLESS OTHERWISE SPECIFIED

P/N A3203-X ASSEMBLY

Eckert & Ziegler
Isotope Products
VALENCIA, CALIFORNIA 91355

THIS DRAWING IS THE PROPERTY OF ISOTOPE PRODUCTS LABORATORIES AND MAY NOT BE USED, REPRODUCED, PUBLISHED OR DISCLOSED TO OTHERS WITHOUT EXPRESS AUTHORIZATION BY ISOTOPE PRODUCTS LABORATORIES.

UNLESS OTHERWISE SPECIFIED DIMENSIONS ARE IN INCH-SIZES. METRIC UNITS [mm] ARE IN MILLIMETERS.

TOLERANCES (UNLESS OTHERWISE SPECIFIED)

X.XXX	±	.002	INCH	ANGULAR TOLERANCE OF 0°±30'
X.XX	±	.005	INCH	FRACTIONAL DIMENSIONS ± 1/32"
X.X	±	.03	INCH	REFERENCE DIMENSIONS () N/A
X.	±	.1	INCH	SURFACE ROUGHNESS µINCH MAX

ALL DIMENSIONS ARE FINISHED DIMENSIONS

THIRD ANGLE PROJECTION

DRAWN KP	TITLE MODEL 3203 GFS-3 SOURCE				
ME/CHECKER EZ	SERIES TITLE GFS AND XFB SOURCES (PHI & BFI)				
ENGINEER EZ					
SCALE NONE	SIZE A	CAGE CODE 32993	DRAWING NO. 3203	REV G	SHEET 3 OF 6

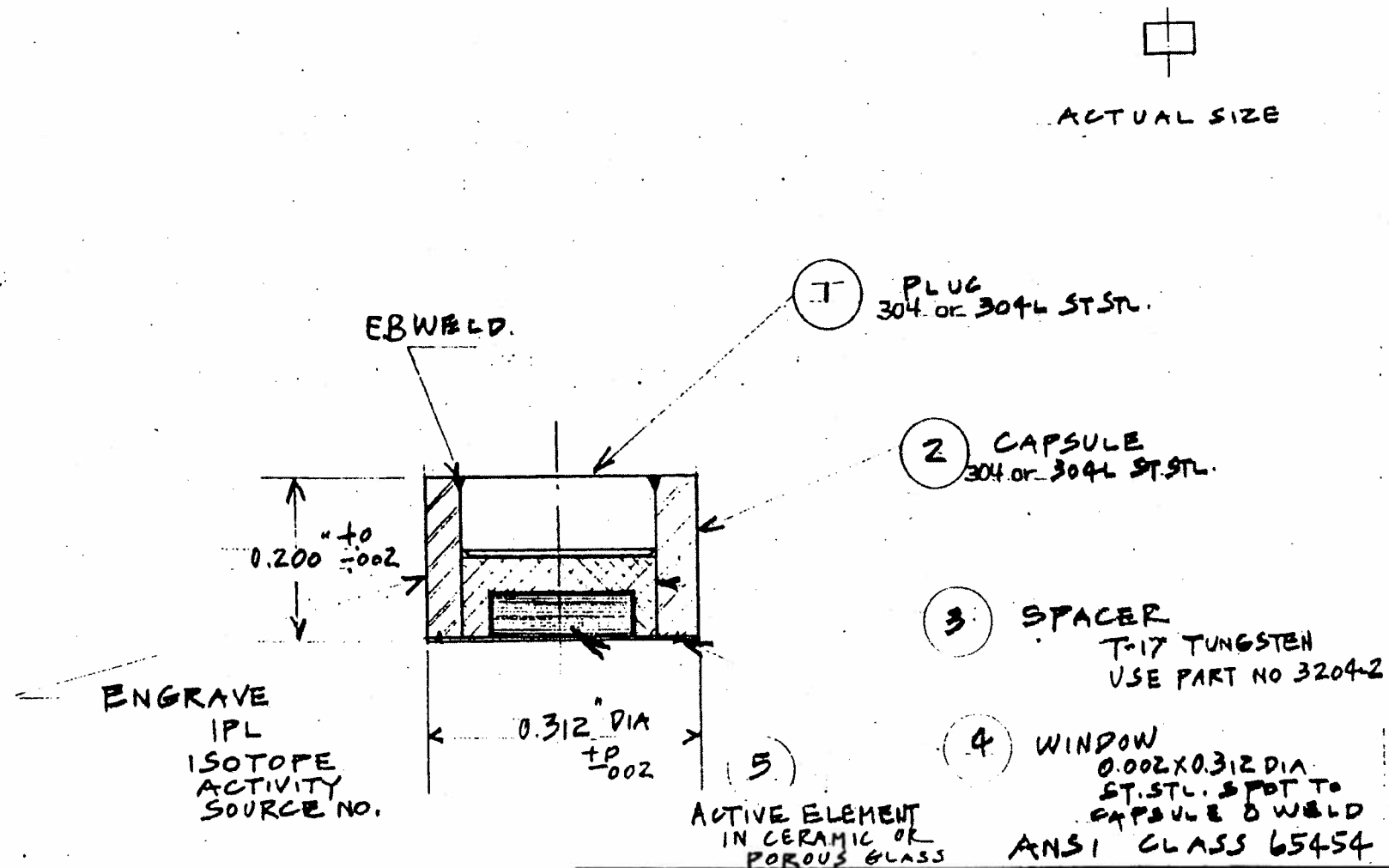

GROUP #1

ISOTOPE PRODUCTS LAB

APPROVED BY: DATE

ERW 2-26-87

3/3/87

JAC 3-3-87

ISOTOPE PRODUCTS LABORATORIES
BURBANK, CALIFORNIA 91504

SCALE: 5 TO 1	APPROVED BY:	DRAWN BY E.W.
DATE: 2-26-87		REVISED A 9/15/88

LOW ENERGY X RAY SOURCE.
GFS-3

GFS AND XFB SOURCES

DRAWING NUMBER A3214

U.S. Department
of Transportation

East Building, PHH-23
1200 New Jersey Avenue SE
Washington, D.C. 20590

**Pipeline and
Hazardous Materials
Safety Administration**

CERTIFICATE NUMBER: USA/0357/S-96, Revision 9

ORIGINAL REGISTRANT(S):

Ms. Frida Tan
Regulatory Affairs Manager
Eckert & Ziegler Isotope Products
24937 Avenue Tibbitts
Valencia, 91355
USA

REGISTERED USER(S):

Mr. Lawrence A. Proud
Radiation Safety Officer and Senior Manager
Boeing
P.O. Box 3707
M/S 6Y-38
Seattle, 98124
USA