U.S. Department
of Transportation

1200 New Jersey Avenue, S.E.
Washington, D.C. 20590

**Pipeline and
Hazardous Materials
Safety Administration**

**IAEA CERTIFICATE OF COMPETENT AUTHORITY
SPECIAL FORM RADIOACTIVE MATERIALS
CERTIFICATE USA/0351/S-96, REVISION 8**

This certifies that the sources described have been demonstrated to meet the regulatory requirements for special form radioactive material as prescribed in the regulations of the International Atomic Energy Agency[1] and United States of America[2] for the transport of radioactive material.

1. Source Identification - Eckert & Ziegler Isotope Products Models 3004 and 3014-01, 3014-02, and 3014-03 (also referred to as Model N-252 Series).

2. Source Description - Cylindrical double encapsulations made of Type 304 or 304L stainless steel and fusion welded. Approximate outer dimensions are 9.4 mm (0.37 in.) in diameter and 32.5 mm (1.28 in.) in length. A threaded stud measuring 5.08 mm (0.2 in.) long maximum is located at the center of the end opposite the weldment. Construction of Capsule 3004 shall be in accordance with attached Isotope Products Laboratories Drawing No. A3004, Rev. A. Construction of Capsules 3014-01 and 3014-02 shall be in accordance with attached Eckert & Ziegler Isotope Products Drawing No. 3014, Rev. K, Sheet 3 of 11. Construction of Capsule 3014-03 shall be in accordance with attached Eckert & Ziegler Isotope Products Drawing No. 3014, Rev. K, Sheet 4 of 11.

3. Radioactive Contents - No more than 1.11 GBq (30.0 mCi) of Californium-252. The Cf-252 is in the form of Cf_2O_3 in aluminum, ceramic, or palladium metal.

4. Quality Assurance - Records of Quality Assurance activities required by paragraph 310 of the IAEA regulations[1] shall be maintained and made available to the authorized officials for at least three years after the last shipment authorized by this certificate. Consignors in the United States exporting shipments under this certificate shall satisfy the requirements of Subpart H of 10 CFR 71.

5. Expiration Date - This certificate expires on October 30, 2014. On January 31, 2012, this certificate supersedes all previous revisions of USA/0351/S-96.

This certificate is issued in accordance with paragraph 804 of the IAEA Regulations and Section 173.476 of Title 49 of the Code of Federal Regulations, in response to the September 30, 2011 petition by Eckert & Ziegler Isotope Products, Valencia, CA, and in consideration of other information on file in this Office.

Certified by:

NOV 29 2011

Dr. Magdy El-Sibaie
Associate Administrator for
Hazardous Materials Safety

(DATE)

Revision 8 - Issued to update model series numbers and to add new model series version.

---

[1] "Regulations for the Safe Transport of Radioactive Material, 1996 Edition (Revised), No. TS-R-1 (ST-1, Revised)," published by the International Atomic Energy Agency (IAEA), Vienna, Austria.

[2] Title 49, Code of Federal Regulations, Parts 100 - 199, United States of America.

INDIVIDUALLY PACKAGE
ASSEMBLY

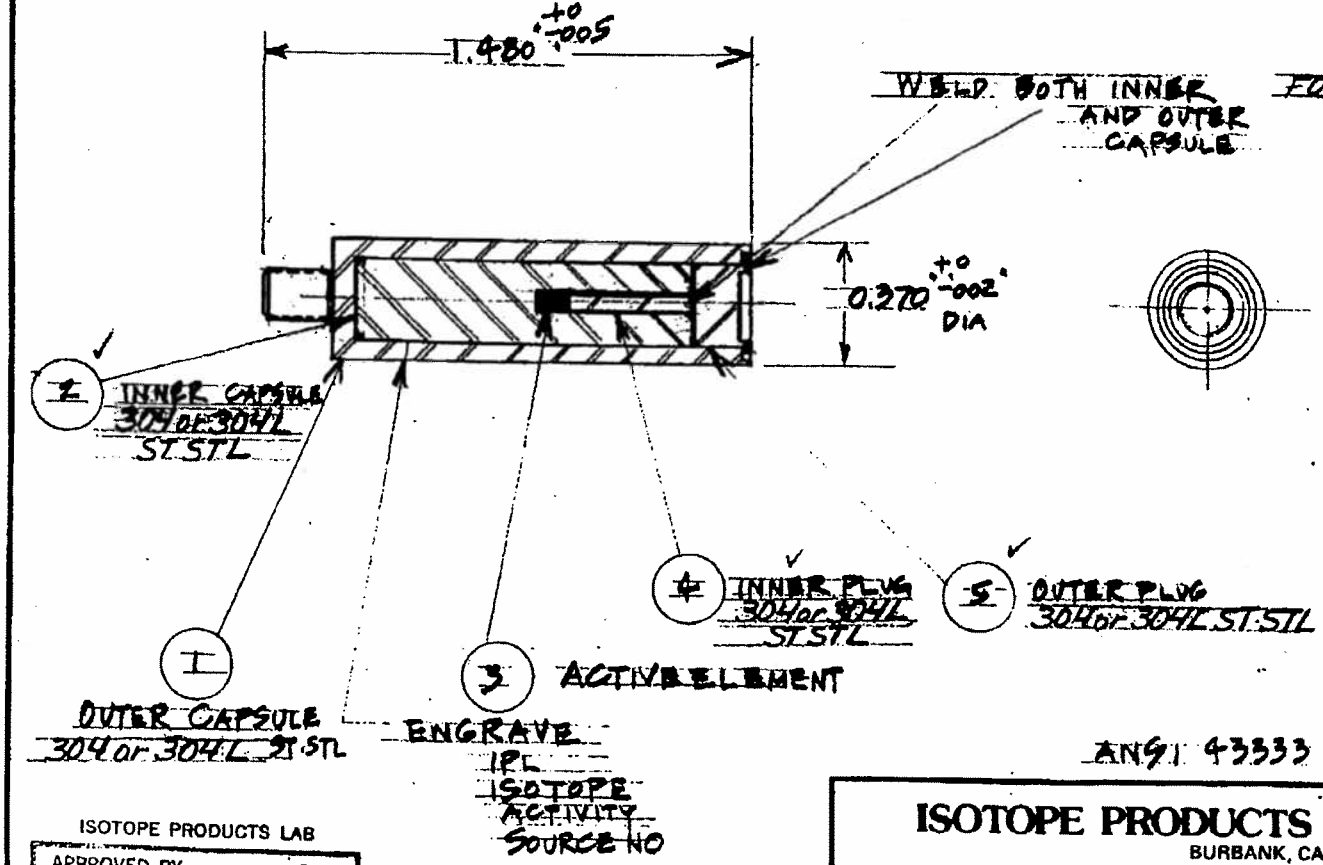

ANSI 43333 SPECIAL FORM

ISOTOPE PRODUCTS LAB

APPROVED BY	DATE
ENG. EMW	11-21-86
QUALITY ASSURANCE	12-9-86
PRODUCTION JMC	12/2/86

ISOTOPE PRODUCTS LABORATORIES

BURBANK, CALIFORNIA 91504

SCALE: 2 to 1	APPROVED BY:	DRAWN BY EWT
DATE: NOV 20, 86		REVISED A 9/15/88

NEUTRON SOURCE
MODEL SR-CF-100 (CURRENTLY MODEL N-252)

HIGH INTENSITY GAMMA AND NEUTRON SOURCES

DRAWING NUMBER A3004

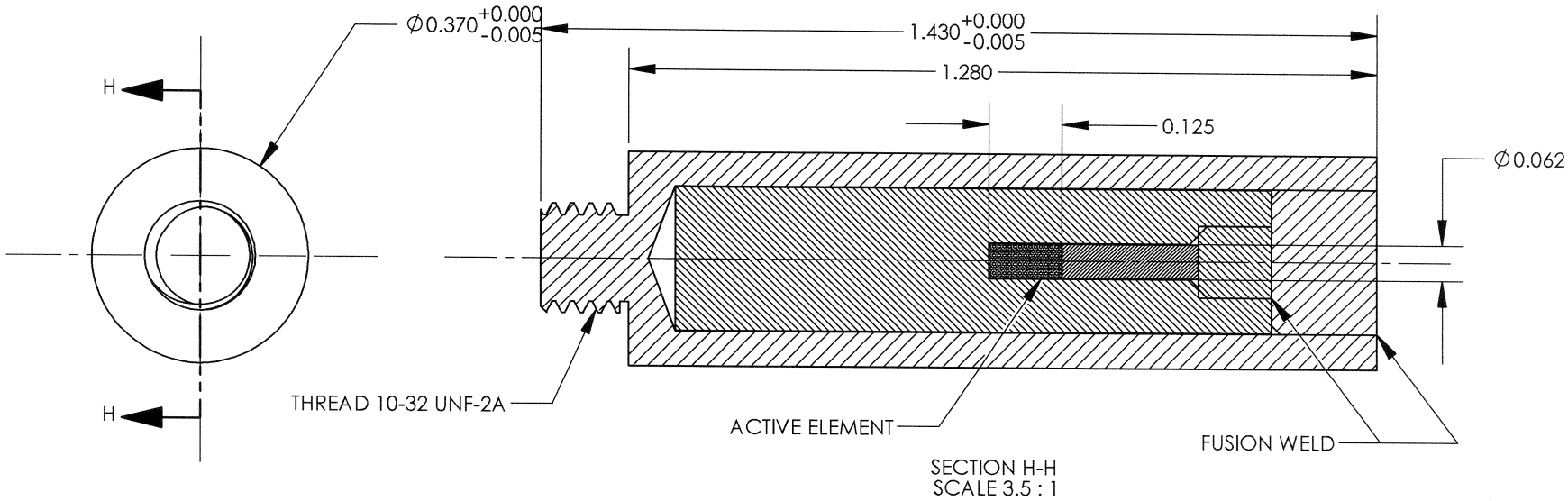

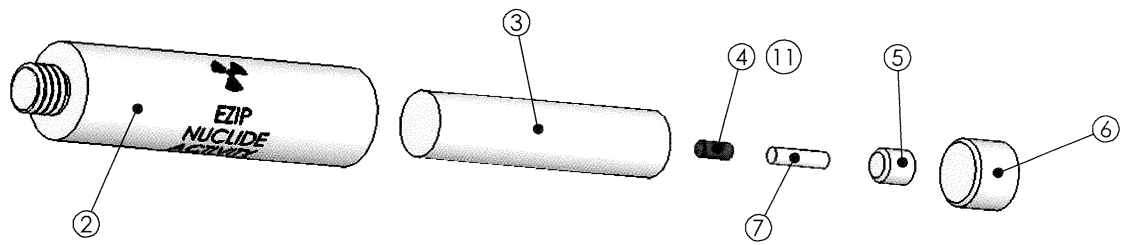

2. PACKAGE AND IDENTIFY PART NUMBER THEREON.
1. ASSEMBLE PER ENGINEERING DRAWING.
NOTES: UNLESS OTHERWISE SPECIFIED

P/N A3014-01 NEUTRON SOURCE ASSEMBLY (CERAMIC ACTIVE ELEMENT)
P/N A3014-02 NEUTRON SOURCE ASSEMBLY (SINGLE Cf-252 WIRE ACTIVE ELEMENT)

Eckert & Ziegler
Isotope Products
VALENCIA, CALIFORNIA 91355

THIS DRAWING IS THE PROPERTY OF ECKERT&ZIEGLER ISOTOPE PRODUCTS AND MAY NOT BE USED, REPRODUCED, PUBLISHED OR DISCLOSED TO OTHERS WITHOUT EXPRESS AUTHORIZATION BY ECKERT&ZIEGLER ISOTOPE PRODUCTS.

UNLESS OTHERWISE SPECIFIED DIMENSIONS ARE IN INCH-SIZES. METRIC UNITS [mm] ARE IN MILLIMETERS.

TOLERANCES (UNLESS OTHERWISE SPECIFIED)

X.XXX	± .002	INCH	ANGULAR TOLERANCE OF 0°±30'
X.XX	± .005	INCH	FRACTIONAL DIMENSIONS ± 1/32"
X.X	± .03	INCH	REFERENCE DIMENSIONS () N/A
X.	± .1	INCH	SURFACE ROUGHNESS µINCH MAX

ALL DIMENSIONS ARE FINISHED DIMENSIONS

THIRD ANGLE PROJECTION

DRAWN	KP
ME/CHECKER	EZ
ENGINEER	EZ
SCALE	NONE
SIZE	A
TITLE	NEUTRON SOURCE
SERIES TITLE	HIGH INTENSITY GAMMA AND NEUTRON SOURCES (HEG SERIES CAPSULES 193, 225 & N-252)
CAGE CODE	32993
DRAWING NO.	3014
REV	K
SHEET	3 OF 11

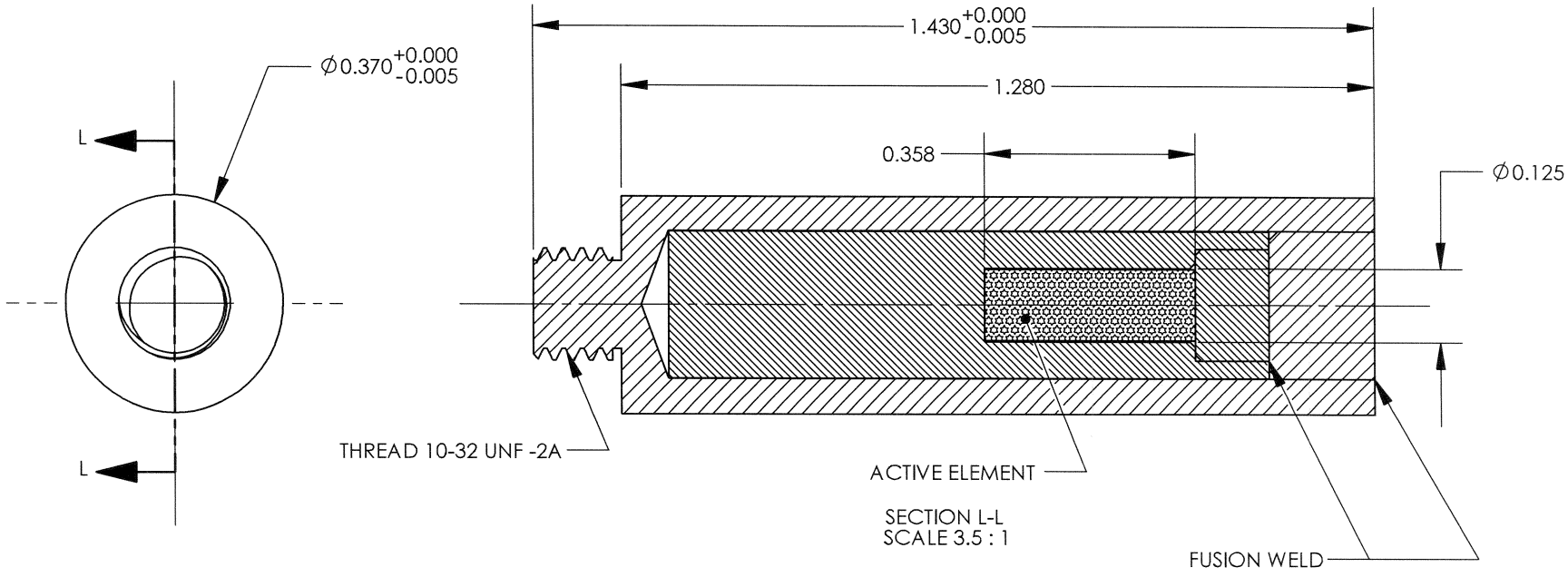

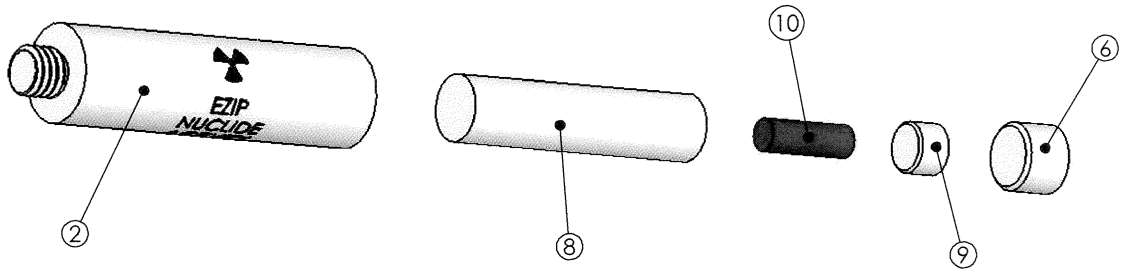

2. PACKAGE AND IDENTIFY PART NUMBER THEREON.
1. ASSEMBLE PER ENGINEERING DRAWING.`
NOTES: UNLESS OTHERWISE SPECIFIED

P/N A3014-03 NEUTRON SOURCE ASSEMBLY
(MULTIPLE Cf-252 ACTIVE ELEMENTS; UP TO THREE)

Eckert & Ziegler
Isotope Products

VALENCIA, CALIFORNIA 91355

THIS DRAWING IS THE PROPERTY OF ECKERT&ZIEGLER ISOTOPE PRODUCTS AND MAY NOT BE USED, REPRODUCED, PUBLISHED OR DISCLOSED TO OTHERS WITHOUT EXPRESS AUTHORIZATION BY ECKERT&ZIEGLER ISOTOPE PRODUCTS.

UNLESS OTHERWISE SPECIFIED DIMENSIONS ARE IN INCH-SIZES. METRIC UNITS [mm] ARE IN MILLIMETERS.

TOLERANCES (UNLESS OTHERWISE SPECIFIED)

X.XXX	± .002	INCH	ANGULAR TOLERANCE OF 0°±30'
X.XX	± .005	INCH	FRACTIONAL DIMENSIONS ± 1/32"
X.X	± .03	INCH	REFERENCE DIMENSIONS () N/A
X.	± .1	INCH	SURFACE ROUGHNESS µINCH MAX

ALL DIMENSIONS ARE FINISHED DIMENSIONS

THIRD ANGLE PROJECTION

DRAWN	KP
ME/CHECKER	EZ
ENGINEER	EZ
SCALE	NONE
SIZE	A

TITLE
NEUTRON SOURCE

SERIES TITLE
HIGH INTENSITY GAMMA AND NEUTRON SOURCES
(HEG SERIES CAPSULES 193, 225 & N-252)

CAGE CODE	DRAWING NO.	REV	SHEET
32993	3014	K	4 OF 11

U.S. Department
of Transportation

East Building, PHH-23
1200 New Jersey Avenue SE
Washington, D.C. 20590

**Pipeline and
Hazardous Materials
Safety Administration**

CERTIFICATE NUMBER: USA/0351/S-96, Revision 8

ORIGINAL REGISTRANT(S):

Ms. Frida Tan
Regulatory Affairs Manager
Eckert & Ziegler Isotope Products
24937 Avenue Tibbitts
Valencia, 91355
USA

REGISTERED USER(S):

Mr. Steve Browne
Manager, Radiation Safety
Troxler Electronic Laboratories
P.O. Box 12057
3008 Cornwallis Road
Research Triangle Park, 27709
USA

Mr. Damian Rose
Assistant Radiation Safety Officer
Troxler Electronic Laboratories
P.O. Box 12057
3008 Cornwallis Road
Research Triangle Park, 27709
USA