U.S. Department
of Transportation

**Pipeline and
Hazardous Materials
Safety Administration**

1200 New Jersey Avenue, S.E.
Washington, D.C. 20590

**IAEA CERTIFICATE OF COMPETENT AUTHORITY
SPECIAL FORM RADIOACTIVE MATERIALS
CERTIFICATE USA/0336/S-96, REVISION 10**

This certifies that the sources described have been demonstrated to meet the regulatory requirements for special form radioactive material as prescribed in the regulations of the International Atomic Energy Agency[1] and United States of America[2] for the transport of radioactive material.

1. Source Identification - Eckert & Ziegler Isotope Products (EZIP) Model Nos. XFB-3 and XFB-4.

2. Source Description - Both sources are a cylindrical disk single encapsulation constructed of Monel (Model No. XFB-3) or Type 304 or 304L stainless steel with fusion welds and a brazed-in-place beryllium window at one end. Approximate outer dimensions of the Model No. XFB-3 are 7.9 mm (0.312 in.) in diameter and 5.1 mm (0.2 in.) thick. Approximate outer dimensions of the Model No. XFB-4 are 10.8 mm (0.425 in.) in diameter and 5.0 mm (0.197 in.) thick. Construction of the Model No. XFB-3 shall be in accordance with attached EZIP Drawing Nos. 3204, Rev. M, Sheets 5 and 6 of 12; or 3205, Rev. N, Sheet 6 of 11. Construction of the Model No. XFB-4 shall be in accordance with attached EZIP Drawing No. 3233, Rev. A, Sheet 3 of 10.

3. Radioactive Contents - Each source described by this certificate is authorized to contain any one of the following radionuclides limited to the activity shown. The radionuclides are in the form of chlorides, nitrates, or oxides in ceramic; oxides in gold or aluminum; or metal plated onto substrate.

Radionuclide	Activity MBq	(mCi)
Na-22	185	(5)
Fe-55	11,100	(300)
Co-57	11,100	(300)
Co-58	11,100	(300)
Co-60	370	(10)
Ge-68	1,850	(50)
Sr-90	4,625	(125)
Ru-106	1,850	(50)
Cd-109	11,100	(300)
Ba-133	3,700	(100)
Cs-137	11,100	(300)
Gd-153	55,500	(1,500)
Ra-226	1,850	(50)
Lanthanides*	18,500	(500)
Actinides**	11,100	(300)

* (Isotopes of Ce, Pr, Sm, Eu, Gd, Tm, and Yb only)
** (Isotopes of Ac, Th, Pa, U, Np, Pu, Am, and Cm only)

---

[1] "Regulations for the Safe Transport of Radioactive Material, 1996 Edition (Revised), No. TS-R-1 (ST-1, Revised)," published by the International Atomic Energy Agency (IAEA), Vienna, Austria.

[2] Title 49, Code of Federal Regulations, Parts 100 - 199, United States of America.

CERTIFICATE USA/0336/S-96, REVISION 10

4. Quality Assurance - Records of Quality Assurance activities required by paragraph 310 of the IAEA regulations[1] shall be maintained and made available to the authorized officials for at least three years after the last shipment authorized by this certificate. Consignors in the United States exporting shipments under this certificate shall satisfy the requirements of Subpart H of 10 CFR 71.

5. Expiration Date - This certificate expires on April 30, 2016.

This certificate is issued in accordance with paragraph 804 of the IAEA Regulations and Section 173.476 of Title 49 of the Code of Federal Regulations, in response to the February 11, 2011 petition by Eckert & Ziegler Isotope Products, Valencia, CA, and in consideration of other information on file in this Office.

Certified by:

APR 26 2011

Dr. Magdy El-Sibaie
for Associate Administrator for
Hazardous Materials Safety

(DATE)

Revision 10 - Issued to update corporate name, drawings, and radioactive contents, add monel as a material used for capsule construction, and to extend the expiration date.

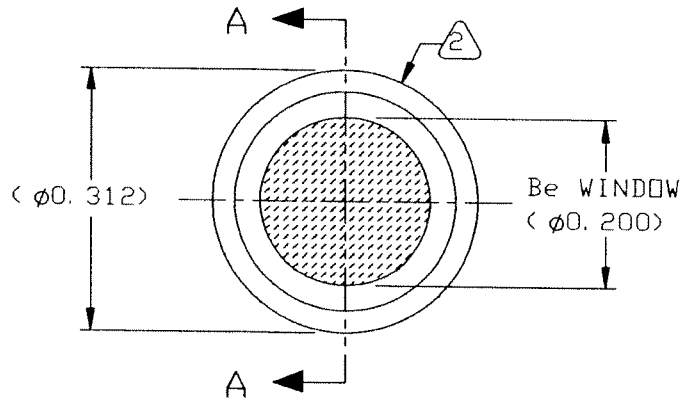

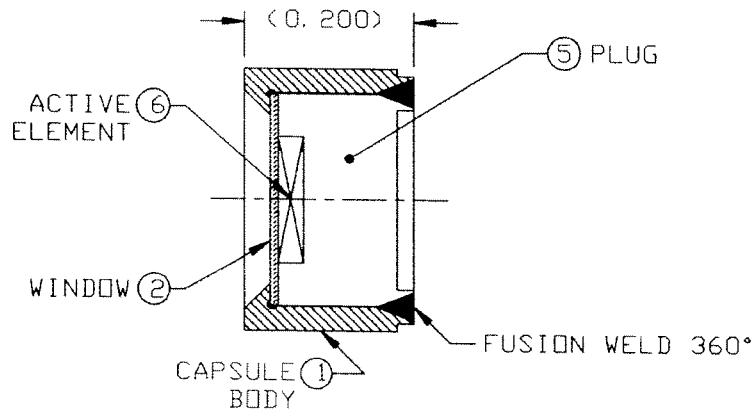

SECTION A-A

2. REFER TO DETAIL DRAWING FOR ENGRAVING

1. ASSEMBLE COMPLETE PER ENGINEERING DRAWING
   BRAZE OR FUSION WELD AS REQUIRED.

NOTES: UNLESS OTHERWISE SPECIFIED (CONTINUED ON SHEET 6)

SEE NEXT SHEET FOR
ASSEMBLY DASH NUMBER

A3204-X

ASSEMBLY

Eckert & Ziegler Isotope Products Valencia, California 91355	UNLESS OTHERWISE SPECIFIED DIMENSIONS ARE IN INCHES TOLERANCES ON FRACTION ±1/64 · DECIMAL X ±.1 · XX .01 · XXX .002 · ANGLE ±.5° THIRD ANGLE PROJECTION	DESIGN JMD/RLT	DRAWING TITLE MODEL 3204 XFB-3 SOURCE			
		SCALE NONE	SERIES TITLE GFS & XFB SOURCES (PHI & BFI)			
		SIZE A	CAGE CODE 32993	REVISION M	DRAWING NUMBER 3204	SHEET 5 OF 12

THIS DRAWING IS THE PROPERTY OF ECKERT&ZIEGLER ISOTOPE PRODUCTS AND MAY NOT BE USED, REPRODUCED, PUBLISHED OR DISCLOSED TO OTHERS WITHOUT EXPRESS AUTHORIZATION BY ECKERT&ZIEGLER ISOTOPE PRODUCTS.

TABLE		
X	MATERIAL	ACTIVE ELEMENT AND SIZE
0	304 SST	FOIL, Ag, UNTHREADED PLUG
1	304 SST	FOIL, Ni
2	304 SST	CANE, 0.125 DIA x 0.030 THK
3	304 SST	CANE, 0.187 DIA x 0.020 THK
4	304 SST	CANE, 0.210 DIA x 0.040 THK
5	304 SST	FOIL, Ag , THREADED PLUG
6	304 SST	FOIL, Pt CLAD Ni
10	MONEL	FOIL, Ag
11	MONEL	FOIL, Ni
12	MONEL	CANE, 0.125 DIA x 0.030 THK
13	MONEL	CANE, 0.187 DIA x 0.020 THK
14	MONEL	CANE, 0.210 DIA x 0.040 THK

NOTES: UNLESS OTHERWISE SPECIFIED (CONTINUED FROM SHEET 5)

THIS DRAWING IS THE PROPERTY OF ECKERT&ZIEGLER ISOTOPE PRODUCTS. AND MAY NOT BE USED, REPRODUCED, PUBLISHED OR DISCLOSED TO OTHERS WITHOUT EXPRESS AUTHORIZATION BY ECKERT&ZIEGLER ISOTOPE PRODUCTS.

UNLESS OTHERWISE SPECIFIED DIMENSIONS ARE IN INCHES

TOLERANCES ON

FRACTION	DECIMAL X	DECIMAL XX	DECIMAL XXX	ANGLE
±1/64	±.1	.01	.002	±.5°

THIRD ANGLE PROJECTION

DESIGN	SCALE	SIZE	CAGE CODE	REVISION	DRAWING NUMBER	SHEET
JMD/RLT	NONE	A	32993	M	3204	6 OF 12

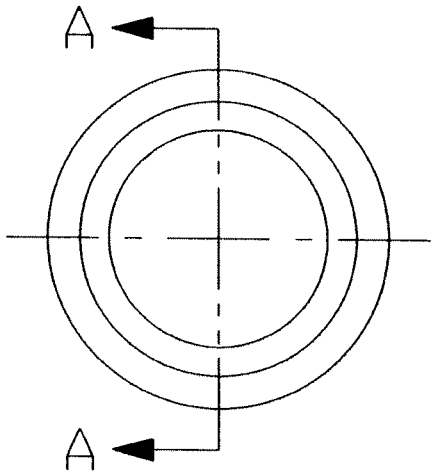

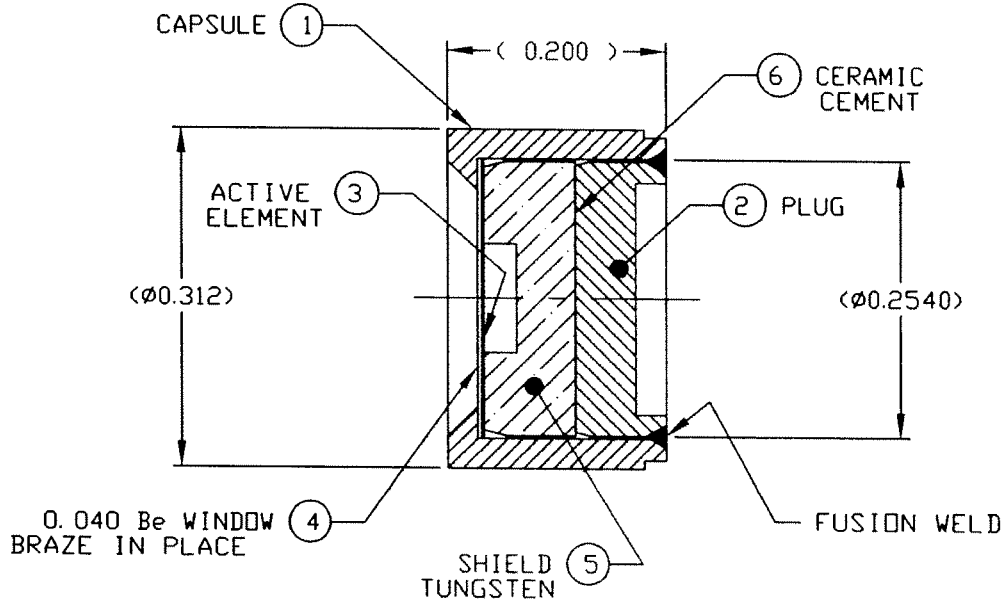

SECTION A-A

TABLE X	
X	MATERIAL
0	304 or 304L STAINLESS STEEL
1	MONEL

TABLE Y	
Y	ACTIVE ELEMENT AND DIMENSIONS
0	FOIL, 0.250 DIA × 0.005 THICK
1	CANE, 0.125 DIA × 0.030 THICK
2	CANE, 0.187 DIA × 0.020 THICK
3	CANE, 0.210 DIA × 0.040 THICK
4	CANE, 0.250 DIA × 0.040 THICK
5	CANE, 0.187 DIA × 0.040 THICK

2. INDIVIDUALLY PACKAGE AND IDENTIFY PART NUMBER THEREON
1. ASSEMBLE COMPLETE PER ENGINEERING DRAWING AND BRAZE OR FUSION WELD AS REQUIRED

NOTE: UNLESS OTHERWISE SPECIFIED

P/N: A3205-XY ASSEMBLY

Eckert & Ziegler
Isotope Products
Valencia, California 91355

THIS DRAWING IS THE PROPERTY OF ISOTOPE PRODUCTS LABORATORIES AND MAY NOT BE USED, REPRODUCED, PUBLISHED OR DISCLOSED TO OTHERS WITHOUT EXPRESS AUTHORIZATION BY ISOTOPE PRODUCTS LABORATORIES.

UNLESS OTHERWISE SPECIFIED DIMENSIONS ARE IN INCHES

TOLERANCES ON				
FRACTION	DECIMAL X	DECIMAL XX	DECIMAL XXX	ANGLE
±1/64	±.1	.01	.002	±.5°

THIRD ANGLE PROJECTION

DESIGN	DRAWING TITLE
EZ/DI	MODEL XFB-3 CAPSULE WITH TUNGSTEN SHIELD
SCALE NONE	SERIES TITLE INDUSTRIAL SOURCES, GFS AND XFB

SIZE	CAGE CODE	REVISION	DRAWING NUMBER	SHEET
A	32993	N	3205	6 OF 11

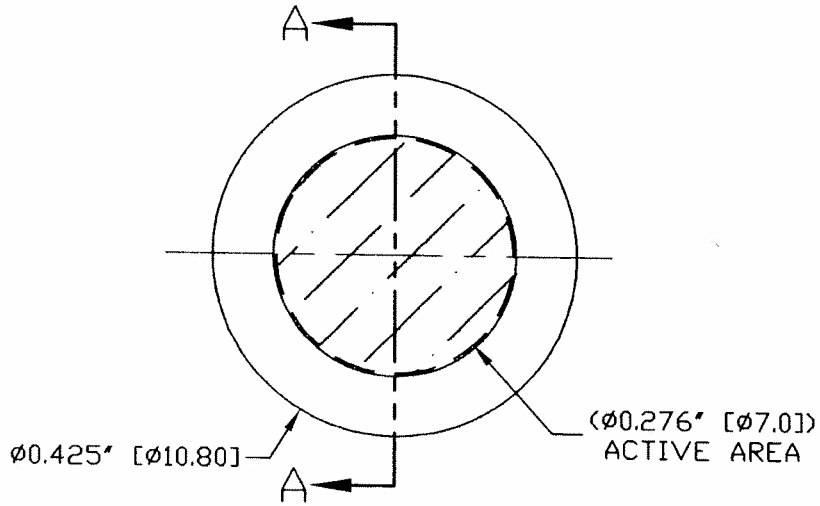

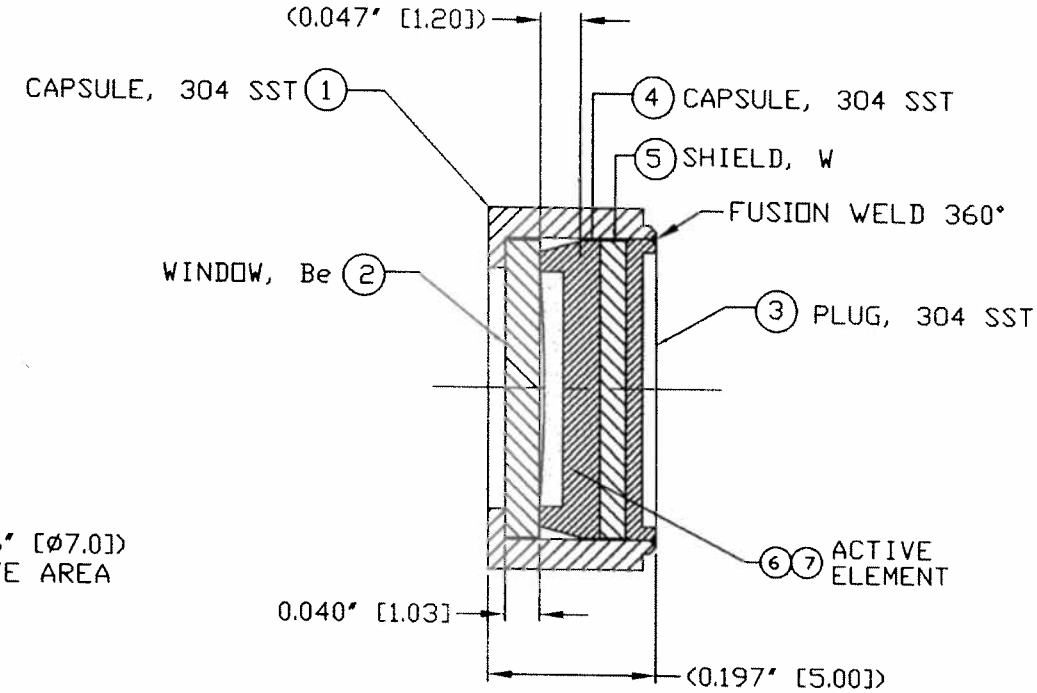

SECTION A–A

4. PACKAGE AND IDENTIFY PART NUMBER THEREON.
3. METRIC DIMENSIONS [mm] ARE IN MILLIMETERS
2. FUSION WELD AS REQUIRED.
1. ASSEMBLE COMPLETE PER ENGINEERING DRAWING

NOTES: UNLESS OTHERWISE SPECIFIED

P/N A3233 ASSEMBLY

Eckert & Ziegler Isotope Products Valencia, California 91355	UNLESS OTHERWISE SPECIFIED DIMENSIONS ARE IN INCH-SIZES TOLERANCES (UNLESS OTHERWISE SPECIFIED) X.XXX ± .002 INCH X.XX ± .01 INCH X.X ± .1 INCH ANGULAR TOLERANCE OF 0°±30' FRACTIONAL DIMENSIONS ± 1/16 ALL DIMENSIONS ARE FINISHED DIMENSIONS THIRD ANGLE PROJECTION	DRAWN DI 24JUN02 ME/CHECKER KP 24JUN02 ENGR EZ 24JUN02	TITLE CESIO XFB SOURCE DRAWING NO. 3233	REV A
THIS DRAWING IS THE PROPERTY OF ISOTOPE PRODUCTS LABORATORIES AND MAY NOT BE USED, REPRODUCED, PUBLISHED OR DISCLOSED TO OTHERS WITHOUT EXPRESS AUTHORIZATION BY ISOTOPE PRODUCTS LABORATORIES.		SCALE NONE / SIZE A	SERIES TITLE INDUSTRIAL SOURCES, GFS AND XFB	SHEET 3 OF 10

U.S. Department
of Transportation

East Building, PHH-23
1200 New Jersey Avenue SE
Washington, D.C. 20590

**Pipeline and
Hazardous Materials
Safety Administration**

CERTIFICATE NUMBER: USA/0336/S-96, Revision 10

ORIGINAL REGISTRANT(S):

Ms. Frida Tan
Regulatory Affairs Manager
Eckert & Ziegler Isotope Products
24937 Avenue Tibbitts
Valencia, 91355
USA

REGISTERED USER(S):

Mr. Raymond Dickes
Radiation Safety Officer
Schlumberger
200 Gillingham Lane
Sugar Land, 77478
USA