U.S. Department
of Transportation

**Pipeline and
Hazardous Materials
Safety Administration**

East Building, PHH-23
1200 New Jersey Avenue Southeast
Washington, D.C. 20590

IAEA CERTIFICATE OF COMPETENT AUTHORITY
SPECIAL FORM RADIOACTIVE MATERIALS
CERTIFICATE USA/0158/S-96, REVISION 7

This certifies that the source described has been demonstrated to meet the regulatory requirements for special form radioactive material as prescribed in the regulations of the International Atomic Energy Agency[1] and the United States of America[2] for the transport of radioactive material.

1. Source Identification - E.I. DuPont/New England Nuclear Model NER-479C.

2. Source Description - Cylindrical single encapsulation made of Type 316L stainless steel and heli-arc seal welded. Approximate outer dimensions range from 15.2 mm (0.6 in.) to 38.1 mm (1.5 in.) in diameter and 5.6 mm (0.22 in.) to 12.7 mm (0.5 in.) in length. The active face has a wall thickness of approximately 0.25 mm (0.01 in.). Construction shall be in accordance with attached New England Nuclear Corp. Drawing No. 313-306, dated 9-11-78.

3. Radioactive Contents - No more than 74.0 GBq (2.0 Ci) of Americium-241. The Am-241 is in the form of a ceramic.

4. Quality Assurance - Records of Quality Assurance activities required by Paragraph 310 of the IAEA regulations[1] shall be maintained and made available to the authorized officials for at least three years after the last shipment authorized by this certificate. Consignors in the United States exporting shipments under this certificate shall satisfy the applicable requirements of Subpart H of 10 CFR 71.

5. Expiration Date - This certificate expires on November 30, 2016.

---

[1] "Regulations for the Safe Transport of Radioactive Material, 1996 Edition (Revised), No. TS-R-1 (ST-1, Revised)," published by the International Atomic Energy Agency(IAEA), Vienna, Austria.

[2] Title 49, Code of Federal Regulations, Parts 100-199, United States of America.

CERTIFICATE USA/0158/S-96, REVISION 7

This certificate is issued in accordance with paragraph 804 of the IAEA Regulations and Section 173.476 of Title 49 of the Code of Federal Regulations, in response to the October 25, 2011 petition by J.L. Shepherd, San Fernando, CA, and in consideration of other information on file in this Office.

Certified By:

Dr. Magdy El-Sibaie
Associate Administrator for Hazardous Materials Safety

Dec 01 2011
(DATE)

Revision 7 - Issued to extend the expiration date.

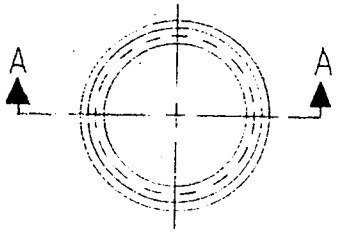

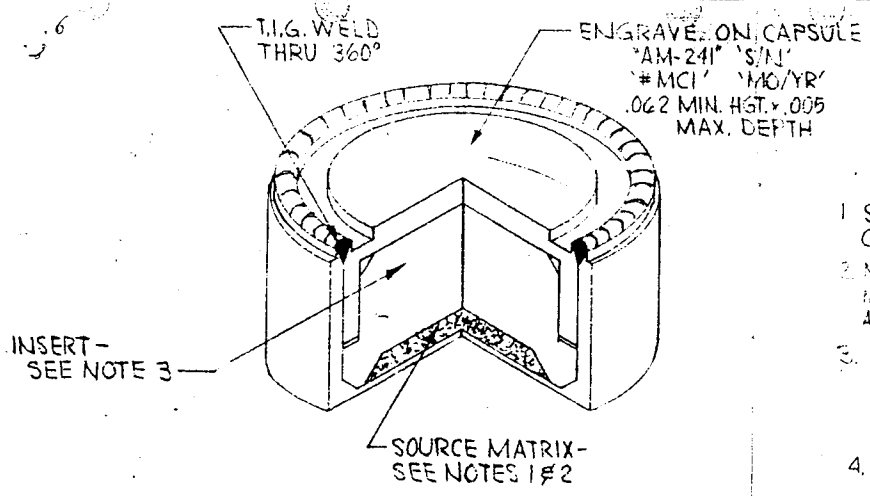

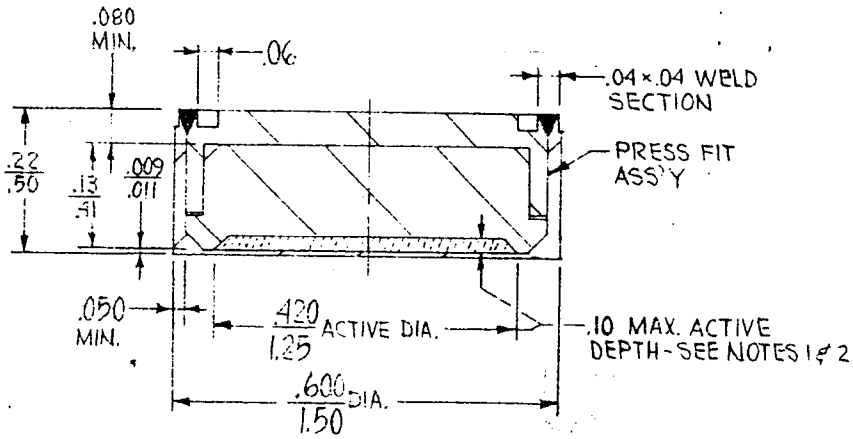

SECTION A-A

NOTES

1. SOURCE MATRIX CONSISTS OF AM 241 AS A VITREOUS CERAMIC FUSED TO THE INSERT FORMING A CERAMIC GLAZE.
2. MAXIMUM ACTIVITY CONTENT SHALL BE 2000 MCI. MAXIMUM ACTIVITY CONCENTRATION SHALL BE 1.25 CI/CM^2 ACTIVE AREA. ACTIVE DIA./ACTIVE HGT. RATIO TO BE 5:1 MIN.
3. INSERT TO WHICH THE SOURCE MATRIX IS FUSED, SHALL BE CRES 316L STN. STL. OR AN ALUMINO-SILICATE MACHINABLE CERAMIC (MELTING POINT ~1200°C AFTER FIRING AND SUBSEQUENT COOLING).
4. LEAK TEST PER ANSI N542-1977 PROCEDURES A2.1.1 SMEAR TEST, A2.1.3 IMMERSION TEST, AND A2.2.1 BUBBLE TEST. SEE NSQA TEST DIRECTIVE 008. LIMIT 1×10^{-3} µCI.
5. ANSI N542-1977 PERFORMANCE CLASSIFICATION C6-4
6. D.O.T. "SPECIAL FORM" MATERIAL PER 10CFR71.4.

NEN CONTROL SPECIFICATION

MATERIAL SPECIFICATIONS		FRACTIONAL	DECIMAL	ANGULAR	NEW ENGLAND NUCLEAR CORP. BOSTON, MASS.
CRES 316L STN.STL.		± 1/64	±.XX ±.010 ±.XXX ±.005	± 30'	
DRAWN	J. SUMARES	REV.	DATE 9-11-78	SCALE N.T.S.	NAME NER-479C AM-241 L.E. PHOTON SOURCE
CHECKED					DRAWING NO. 313-306
APPR'D			DO NOT SCALE DRAWING		

FORFACE P-184

U.S. Department
of Transportation

**Pipeline and
Hazardous Materials
Safety Administration**

**East Building, PHH-23
1200 New Jersey Avenue SE
Washington, D.C. 20590**

CERTIFICATE NUMBER: USA/0158/S-96, Revision 7

ORIGINAL REGISTRANT(S):

Ms. Mary Shepherd
Vice President
J.L. Shepherd
1010 Arroyo Ave.
San Fernando, 91340-1822
USA