U.S. Department
of Transportation

**Pipeline and
Hazardous Materials
Safety Administration**

East Building, PHH-23
1200 New Jersey Avenue Southeast
Washington, D.C. 20590

IAEA CERTIFICATE OF COMPETENT AUTHORITY
SPECIAL FORM RADIOACTIVE MATERIALS
CERTIFICATE USA/0066/S-96, REVISION 7

This certifies that the source described has been demonstrated to meet the regulatory requirements for special form radioactive material as prescribed in the regulations of the International Atomic Energy Agency[1] and the United States of America[2] for the transport of radioactive material.

1. Source Identification - 3M Model 4F6H.

2. Source Description - Cylindrical double encapsulation constructed of K Monel nickel alloy. Approximate outer dimensions are 9.52 mm (0.375 in.) in diameter and 30.1 mm (1.186 in.) in length. Construction shall be in accordance with attached 3M Drawing Nos. 12-1921-2591-7 or 12-1921-2592-5.

3. Radioactive Contents - No more than 0.15 TBq (4 Ci) of Cesium-137 in the form of 3M Brand ceramic microspheres.

4. Quality Assurance - Records of Quality Assurance activities required by Paragraph 310 of the IAEA regulations[1] shall be maintained and made available to the authorized officials for at least three years after the last shipment authorized by this certificate. Consignors in the United States exporting shipments under this certificate shall satisfy the applicable requirements of Subpart H of 10 CFR 71.

5. Expiration Date - This certificate expires on November 30, 2014.

---

[1] "Regulations for the Safe Transport of Radioactive Material, 1996 Edition (Revised), No. TS-R-1 (ST-1, Revised)," published by the International Atomic Energy Agency(IAEA), Vienna, Austria.

[2] Title 49, Code of Federal Regulations, Parts 100-199, United States of America.

CERTIFICATE USA/0066/S-96, REVISION 7

This certificate is issued in accordance with paragraph 804 of the IAEA Regulations and Section 173.476 of Title 49 of the Code of Federal Regulations, in response to the October 19, 2009 petition by J.L. Shepherd, San Fernando, CA, and in consideration of other information on file in this Office.

Certified By:

Oct 30 2009

Dr. Magdy El-Sibaie (DATE)
Acting Associate Administrator for Hazardous Materials Safety

Revision 7 - Issued to renew the expiration date.

ITEM	PART NUMBER	QTY.	DESCRIPTION
1	B-12-1921-2593-3	1	CAPSULE, OUTE
2	B-12-1921-2597-4	1	ASS'Y, INNER C SULE, .30
3	B-12-1921-2595-8	1	PLUG, OUTER
4	B-12-1921-3071-9	1	ASS'Y, WELDED INNER CAPSULE

SEE NOTE

△ SEE NOTE

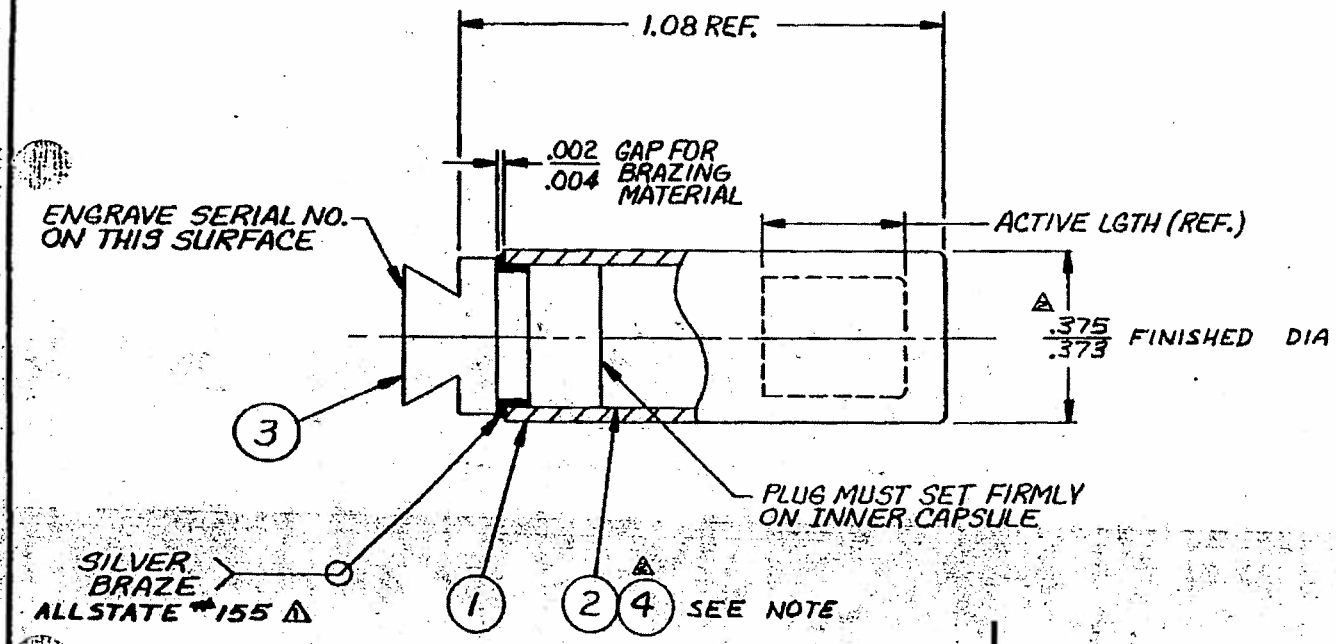

△ NOTE:
1. USE ITEM (2) IN PLACE OF ITEM (4) ONLY WHEN SPECIFIED.

ISSUE	ISSUE DATE AND CHANGE RECORD	REV.	CH.
C	AUG 18, 81 ECO #81-0064 △ ADDED SEP 08 1981		
B	OCT. 13, 80 OCT 23 1980 ECO #80-0180 △ ADDED		
A	JUNE 11, 79 JUL 25 1979 ECO #79-0047 REDRAWN FROM 1921-1300	JBW	

USED ON

© 3M COPYRIGHT 19_72_
This document is the copyrighted property of the 3M Company and may not be reproduced without 3M written permission or used for other than 3M authorized purposes.

TOLERANCE AND SURFACE ROUGHNESS UNLESS NOTED

OPERATION	PLACES IN DIMENSION .0	.00	.000	MAXIMUM SURFACE ROUGHNESS
MACHINING	±.1	±.02	±.005	✓
CUT-OFF, SAW, SHEAR, BREAK	±.1	±.04		
	±	±	±	
WELDING	±.1	±.08		
ANGULAR DIM.	±			
SCALE	4/1			

3M COMPANY
ENGINEERING DIVISION
St. Paul Minnesota

DR. J.B. WYANDT
CH. [illegible]
APP. R.J. Schwein

B

TITLE
ASS'Y, SOURCE, MODEL 4F6H, .30 ACT. LGTH

PART NO. 12-1921-2591-7

ITEM	PART NUMBER	QTY.	DESCRIPTION
1	B-12-1921-2593-3	1	CAPSULE, OUT
2	B-12-1921-2598-2	1	ASS'Y, INNER CAPSULE, .15
3	B-12-1921-2595-8	1	PLUG, OUTER
▲ 4	B-12-1921-3069-3	1	ASS'Y WELDED INNER CAPSULE

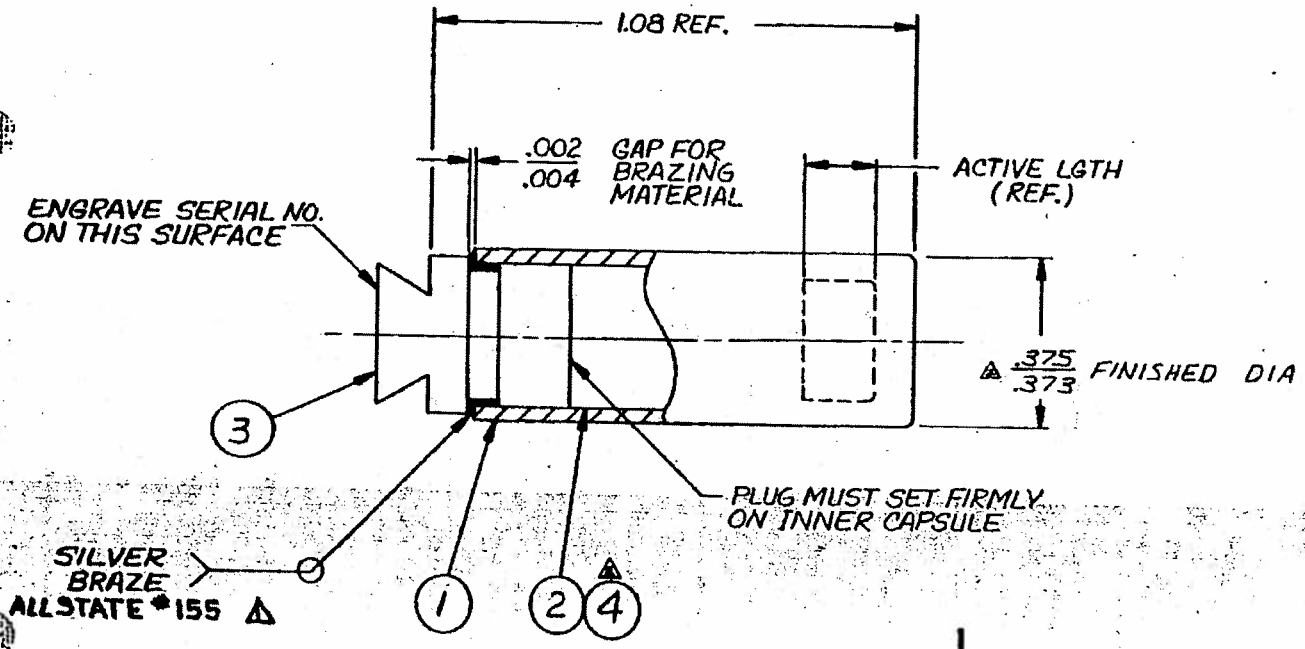

▲ NOTE:
1. USE ITEM (2) IN PLACE OF ITEM (4) ONLY WHEN SPECIFIED.

ISSUE	ISSUE DATE AND CHANGE RECORD	REV.	CH.
C	AUG 18, 81 ECO # 81-0064 ▲ ADDED SEP 08 1981		
B	OCT. 13, 80 ECO # 80-0180 ▲ ADDED		
A	JUNE 11, 79 ECO # 79-0047 REDRAWN FROM 1921-1300 JUL 25 1979	JBW	

USED ON

© 3M COPYRIGHT 19 79
This document is the copyrighted property of the 3M Company and may not be reproduced without 3M written permission or used for other than 3M authorized purposes.

TOLERANCE AND SURFACE ROUGHNESS UNLESS NOTED

OPERATION	PLACES IN DIMENSION .0	.00	.000	MAXIMUM SURFACE ROUGHNESS
MACHINING	±.1	±.08	±.005	✓
CUT-OFF, SAW, SHEAR, BLANK	±.1	±.04		
	±	±	±	
WELDING	±.1	±.08		
ANGULAR DIM.	±			
SCALE	4/1			

3M COMPANY ENGINEERING DIVISION St. Paul Minnesota

DR. J.B. WYANDT
CH. E.R. Stowe
APP. R.T. Schweiss

B

TITLE
ASS'Y, SOURCE, MODEL 4F6H, .15 ACT. LGTH

PART NO. 12-1921-2592-5

U.S. Department
of Transportation

**Pipeline and
Hazardous Materials
Safety Administration**

**East Building, PHH-23
1200 New Jersey Avenue SE
Washington, D.C. 20590**

CERTIFICATE NUMBER: USA/0066/S-96, Revision 7

ORIGINAL REGISTRANT(S):

Ms. Mary Shepherd
Vice President
J.L. Shepherd
1010 Arroyo Ave.
San Fernando, 91340-1822
USA

REGISTERED USER(S):

Mr. Raymond Dickes
Radiation Safety Officer
Schlumberger
200 Gillingham Lane
Sugar Land, 77478
USA