Department of Energy
Washington, DC 20585

DEC 0 5 2012

MEMORANDUM FOR WILLIAM E. MURPHIE
MANAGER, PORTSMOUTH / PADUCAH PROJECT OFFICE

FROM: STEPHEN C. O'CONNOR
HEADQUARTERS CERTIFYING OFFICIAL
DIRECTOR, OFFICE OF PACKAGING AND TRANSPORTATION

SUBJECT: Revision 24 to DOE CoC USA/5467/AF-85 (DOE)

Per your request, attached is Revision 24 of Department of Energy (DOE) Certificate of Compliance (CoC) USA/5467/AF-85 (DOE) for the Steel Banded Wooden Shipping Containers, Models G-4214, G-4255, G-4273 and G-4292, and the associated Approval Record. This renewal is being issued to extend the expiration date for 5 years to November 30, 2017. There have been no changes to the CoC since the last renewal, Revision 23, which was issued on September 25, 2007.

The expiration date of Revision 24 is November 30, 2017.

If you have any questions, please call me at (301) 903-7854, or Dr. James M. Shuler of my staff at (301) 903-5513.

Attachment

U.S. DEPARTMENT OF ENERGY

DOE Packaging Certification Program

CERTIFICATE OF COMPLIANCE
For Radioactive Materials Package

OE F 5822.1
5-85 Formerly EV-618)

1a. Certificate Number	1b. Revision No.	1c. Package Identification No.	1d. Page No.	1e. Total No. Pages
5467	24	USA/5467/AF-85 (DOE)	1	9

2. PREAMBLE

2a. This certificate is issued under the authority of 49 CFR Part 173.7(d).

2b. The packaging and contents described in Item 5 below meet the safety standards set forth in subpart E, "Package Approval Standards" and subpart F, "Package, Special Form, and LSA III Tests" Title 10, Code of Federal Regulations, Part 71.

2c. This certificate does not relieve the consignor from compliance with any requirement of the regulations of the U.S. Department of Transportation or other applicable regulatory agencies, including the government of any country through or into which the package will be transported.

3. This certificate is issued on the basis of a safety analysis report of the package design or application —

(1) Prepared by (*Name and Address*):	(2) Title and identification of report or application:	(3) Date:
U.S. Department of Energy Portsmouth/Paducah Project Office 1017 Majestic Drive, Suite 200 Lexington, Kentucky 40513	Safety Analysis Report for Packaging, Steel Banded Wooden Shipping Containers, HNF-SD-TP-SARP-019, Revision 0.	December 2000

4. CONDITIONS
This certificate is conditional upon fulfilling of the applicable Operational and Quality Assurance requirements of 49CFR parts 100 – 199 and 10CFR Part 71, and the conditions specified in Item 5 below.

5. Description of Packaging and Authorized Contents, Model Number, Transport Index, other Conditions, and References:

(a) Packaging

(1) Model Number: Steel Banded Wooden Shipping Containers, Models G-4214, G-4255, G-4273, and G-4292

(2) Description:

Steel Banded Wooden Shipping Containers (SBWSC) are used to package unirradiated uranium metal enriched to a maximum of 1.256 wt% ^{235}U and in the form of billets, ingots, derbies, and scrap. The SBWSC are wooden boxes strengthened with horizontal and vertical steel bands. There are two classes of containers: 1) a box with a cover, and 2) a pallet with an inverted box as the cover. SBWSC Model numbers G 4214 and G-4292 are boxes with covers and G-4255 and G-4273 are pallets with inverted boxes as the covers.

The steel bands used on all the SBWSC are 3.18 cm (1 ¼ inches) wide with a minimum tensile strength of 30,025 N (6750 lb.). The steel bands meet the requirements of ASTM D 3953 and are closed with notched seals.

All SBWSC are mounted on two or three wooden skids to allow handling via fork lifts.

6a. Date of Issuance: DEC 05 2012	6b. Expiration Date: November 30, 2017

FOR THE U.S. DEPARTMENT OF ENERGY

7a. Address (*of DOE Issuing Office*)	7b. Signature, Name, and Title (*of DOE Approving Official*)
U.S. Department of Energy Office of Packaging and Transportation, EM-33 1000 Independence Avenue, SW Washington, DC 20585	Stephen C. O'Connor Headquarters Certifying Official

SBWSC Models G-4214 and G-4292 (Figures 1 and 2). These boxes have the same width and length but differ in height (see Figures 1 and 2 for dimensions). The sides and ends of both models are constructed of 1 ⅛ inch (nominal) thick, clear, white pine. The bottoms are 1-inch (nominal) thick maple hardwood. The lid of G-4292 is 2.54-cm (1-in.) thick exterior grade plywood; the lid of G-4214 in the authorized configuration, "E", is 2 sheets of 1.27-cm (½-inch) thick exterior grade plywood. Tongue-and-groove construction is used on the sides and bottom. The sides, ends, bottoms, and skids are fastened together with spiral-threaded nails. Weldwood plastic resin glue may be used in the joints. Three horizontal steel bands strengthen the sides and ends of the box; six vertical steel bands strengthen the bottom and lid and secure the lid to the box. A T-55 griffolyn clear plastic cover is placed over the lid before the six bands are applied. G-4214 may be lined with 0.032-inch thick aluminum sheet if needed to prevent wood corrosion of the metal. Partial loads shall be shored with wood or masonite to provide the same fit as a full load.

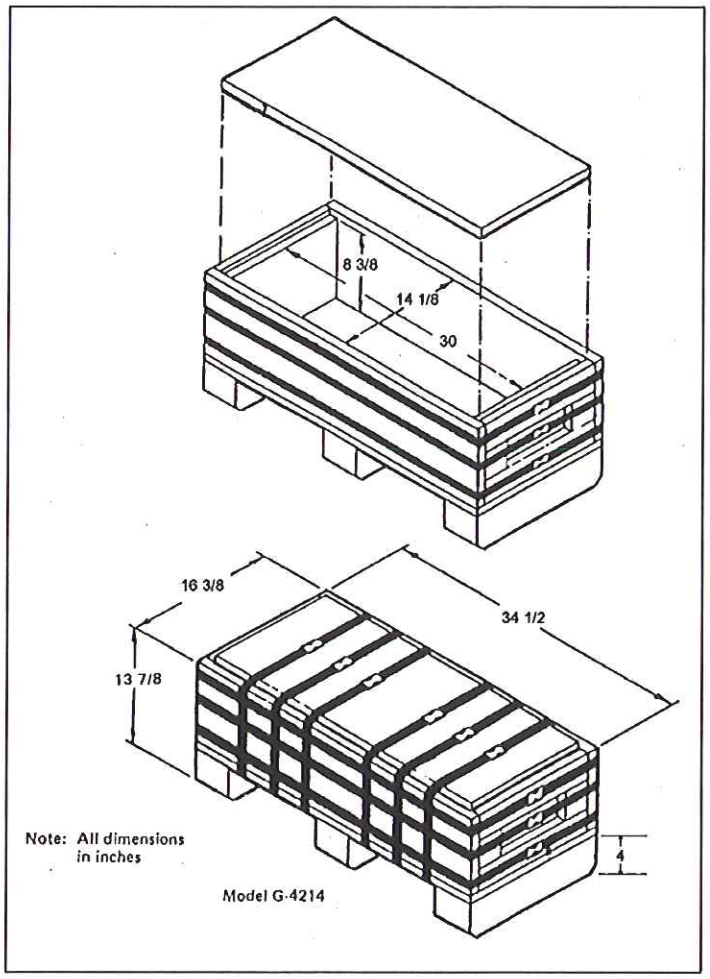

Figure 1.

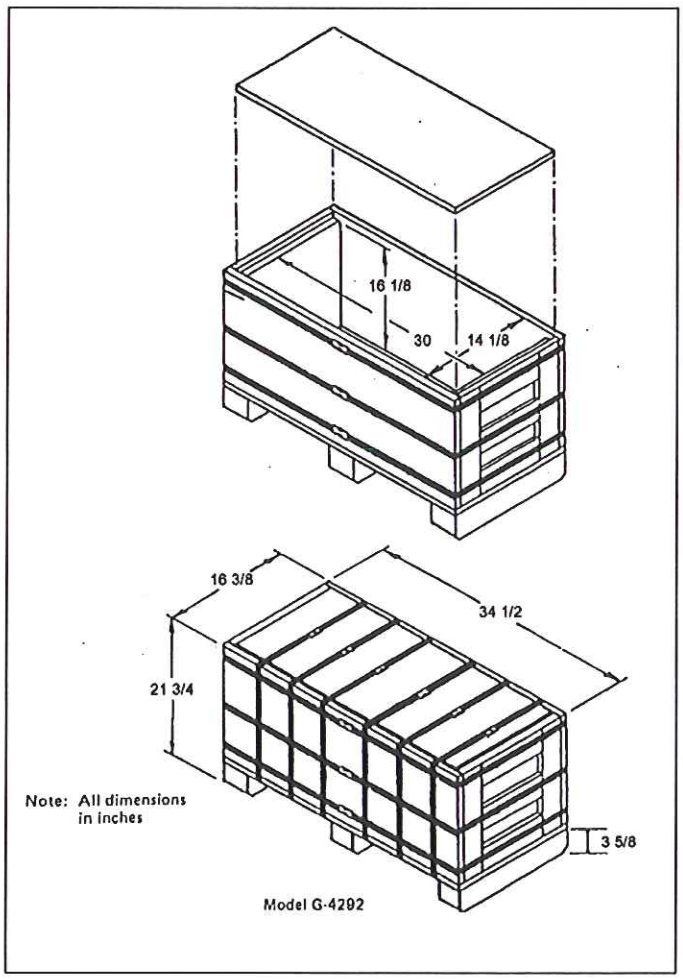

Figure 2.

SBSWC Models G-4255 and G-4273 (Figures 3 and 4). These pallets with inverted box lids have the same design, but different dimensions.

The pallets consist of a 2.54-cm (1-inch) thick sheet of exterior grade plywood topped with a 1.91-cm (¾-inch) thick sheet of exterior grade plywood held together by the bolts that attach the hardwood skids. The 1.91-cm (¾-inch) sheet has 0.48-cm (3/16-inch) deep grooves on the inside face for steel bands that secure the load to the pallet.

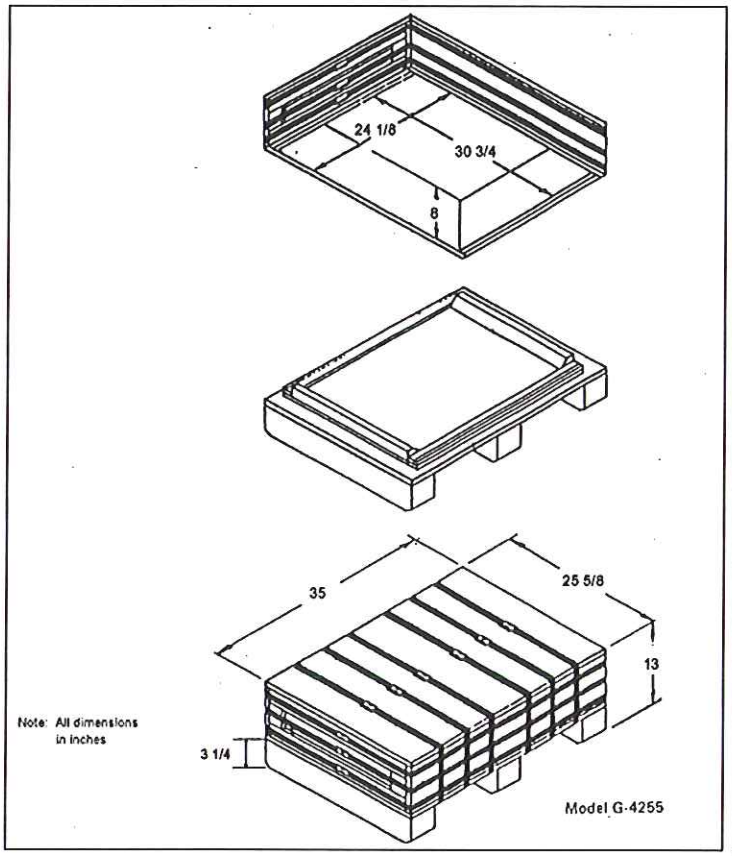

Figure 3..

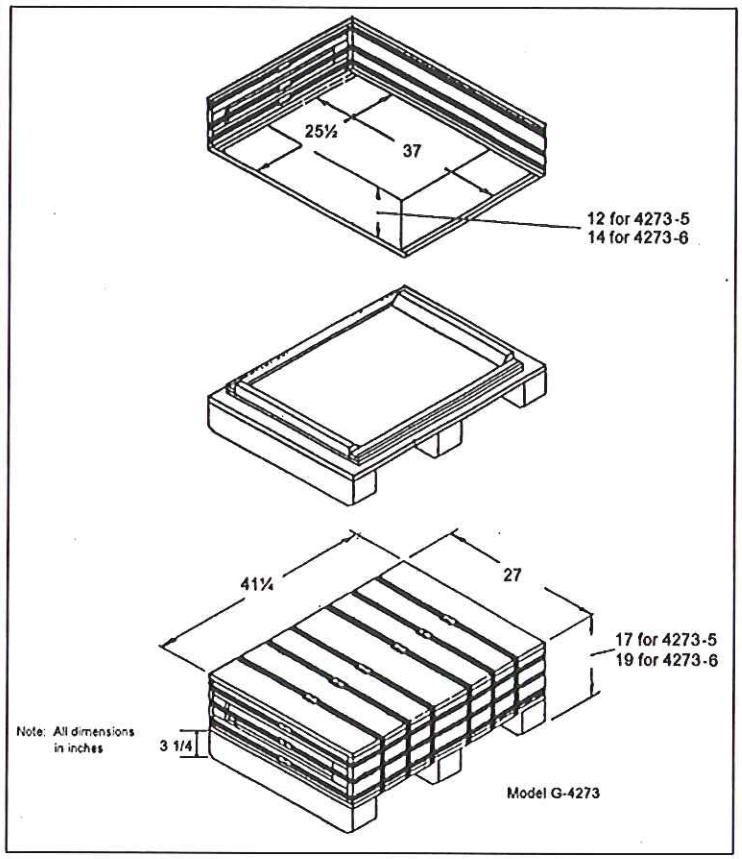

Figure 4.

The inverted box covers of both models are constructed of 1.91-cm (¾-inch) thick exterior grade plywood with 1 ⅛-inches (nominal) thick, clear, white pine ends. The box covers are strengthened by three horizontal steel bands 3.18 cm (1 ¼ inches) wide with a minimum breaking strength of 30,025 N (6750 lb.) per ASTM D 3953.

Model G-4273 has two sizes of inverted box covers as shown in Figure 4. Cover G-4273-5 accommodates ingot diameters up to 27.8 cm (11 inches) while cover G-4273-6 accommodates ingots diameters up to 33.0 cm (13 inches).

The inverted box covers of both models are secured to the pallets with six vertical steel bands 3.18 cm 1 ¼ inches) wide with a minimum breaking strength of 30,025 N (6750 lb.) per ASTM D 3953.

The load side of the pallets is equipped with chocks and stops of hardwood and aluminum that define the load area. The load is secured to the pallet with two steel bands (illustrated in Figure 5) 3.18 cm (1 ¼ inches) wide with a minimum tensile strength of 30,025 N (6750 lb.) per ASTM D 3953.

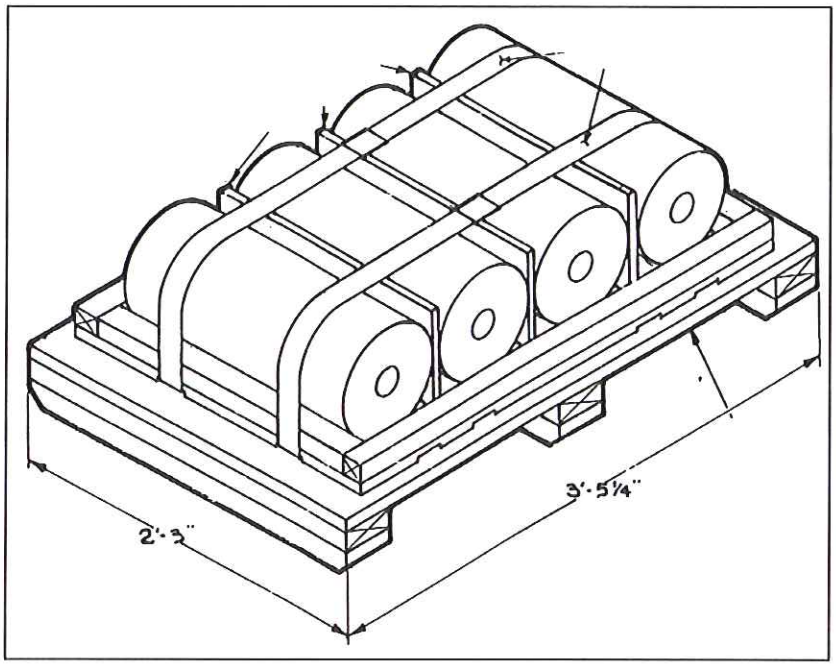

Figure 5.

(b) Drawings:

SBWSC Model No.	Drawing Number	Title	Rev. No.
G-4214 [a]	00F-5500-X-00431	Shipping Container G-4214	23
" "	00F-5500-X-01490	Aluminum Interior Liner for Shipping Containers Details	3
" "	00F-5500-X-01753	Plastic Cover for Wooden Container	0
G-4292	G-4292/00F-5500-X-00491	Shipping Container No. 4	14
" "	00F-5500-X-01753	Plastic Cover for Wooden Container	0
G-4255	00F-5500-X-00468	NPR Billet Shipping Container Packaging Assembly Isometric	9
" "	G-4256/00F-5500-X-00469	NPR Billet Shipping Container Base Assembly	2
" "	G-4257/00F-5500-X-00470	NPR Billet Shipping Container Cover Assembly	0
G-4273	00F-5500-X-00471	Ingot Shipping Container Packaging Assembly	18
" "	00F-5500-X-00472	Ingot Shipping Container Base Assembly	7
G-4273-5	00F-5500-X-00473	Ingot Shipping Container Cover Assembly - Standard Cover	6
G-4273-6	00F-5500-X-00473	Ingot Shipping Container Cover Assembly - Cover for 13"φ NPR Ingots	6

[a] Only configuration E (six vertical steel bands and lid of two sheets of ½ inch plywood) authorized.

(c) Contents and Criticality Safety Index (CSI)

(1) Payload Isotopic Content The isotopic content of the enriched uranium metal authorized in paragraphs 5.(c)(2) through 5.(c)(9) of this Certificate may not exceed the values in the following table:

Isotope	Isotopic Content (g/g of payload)		
	≤0.956 wt% ^{235}U	≤1.106 wt% ^{235}U	≤1.256 wt% ^{235}U
^{234}U	1.33 E-04	1.33 E-04	1.34 E-04
^{235}U	9.56 E-03	1.106 E-02	1.256 E-02
^{236}U	1.00 E-03	1.00 E-03	1.00 E-03
^{238}U	9.91 E-01	9.89 E-01	9.88 E-01
^{241}Pu	4.14 E-11	4.14 E-11	4.14 E-11
^{99}Tc	2.58 E-05	2.58 E-05	2.58 E-05
^{90}Sr	1.56 E-10	1.56 E-10	1.56 E-10

No radioactive isotopes in excess of 70 Bq/g (2×10^{-9} Ci/g) other than those in this table shall be present in the payload.

(2) N (New Production Reactor) Reactor Ingots. Unirradiated ≤0.956 and ≤1.256 wt% ^{235}U enriched uranium metal N Reactor ingots packaged as follows:

N Reactor Ingot Type	^{235}U wt%	No. Ingots per SBWSC	Authorized Model SBWSC	Criticality Safety Index
Mark I Outer	≤1.256	2	G-4273-6	7.6
Mark I Inner	≤0.956	2	G-4273-6	7.6
Mark IV Outer	≤0.956	2	G-4273-6	7.6
Mark IV Inner	≤0.956	2	G-4273-6	7.6

(3) FERMCO Ingot Sections. Unirradiated ≤1.256 wt% ^{235}U enriched metal packaged as follows:

FERMCO Ingot Sections, Size cm (in)	^{235}U wt%	No. Ingot Sections per SBWSC	Authorized Models SBWSC	Criticality Safety Index
33.0 D x 7.6 L (13 D x 3 L)	≤1.256	4	G-4214 or G-4292	11.5
33.0 D x 15.2 L (13 D x 6 L)	≤1.256	2	G-4214 or G-4292	4.1
25.4 D x 15.2 L (10 D x 6 L)	≤1.256	2	G-4214 or G-4292	4.1

(4) FERMCO Primary Ingots. Unirradiated ≤1.256 wt% ^{235}U enriched uranium metal packaged as follows:

FERMCO Primary Ingots, Size cm (in.)	^{235}U wt%	No. Ingots per SBWSC	Authorized Models SBWSC	Criticality Safety Index
30.5 D x 43.2 L (12 D x 17 L)	≤1.256	2	G-4273-6	18.9
30.5 D x 66.0 L (12 D x 26 L)	≤1.256	1	G-4273-6	14.5
33.0 D x 76.2 L (13 D x 30 L)	≤1.256	1	G-4273-6	13.6
22.9 D x 76.2 L (9 D x 30 L)	≤1.256	2	G-4273-5	12.1

(5) FERMCO Derbies. Unirradiated ≤1.256 wt% ^{235}U enriched uranium metal packaged as follows:

FERMCO Derbies	^{235}U wt%	No. Derbies per package	Authorized Models	Criticality Safety Index
Derbies	≤1.256	2	G-4214	5.5
			G-4292	5.5

(6) Hanford RMI Billets. Unirradiated ≤1.256 wt% ^{235}U enriched uranium metal RMI (Radioactive Materials, Inc) Billets packaged as follows:

Hanford RMI Billets, Type, Length, cm(in)	^{235}U wt%	OD/ID, cm(inches)	No. Billets per package	Authorized Model	Criticality Safety Index
Mark I Outer 45.7 to 48.3 (18 to 19)	≤1.256	17.7/7.1 (6.98)/(2.8)	3	G-4255	19.4
Mark I Outer 45.7 to 48.3 (18 to 19)	≤1.256	17.7/7.1 (6.98)/(2.8)	2	G-4255	13.0
Mark I Outer 45.7 to 48.3 (18 to 19)	≤1.256	17.7/7.1 (6.98)/(2.8)	1	G-4255	6.5

(7) FERMCO Scrap. Unirradiated ≤1.256 wt% ^{235}U enriched uranium metal, 33.02 cm (13.0 inches) or 27.94 cm (11.0 in) in diameter packaged as follows:

Minimum Length, cm (in)	^{235}U wt%	OD cm (inches)	Max. Mass U/ SBWSC, kg (lb)	Authorized SBWSC Model	Criticality Safety Index
≥2.54 (1.0)	≤1.256	33.02 (13.0)	535 (1180)	G-4214	50.0
≥5.08 (2.0)	≤1.256	33.02 (13.0)	544 (1200)	G-4214 or G-4292	23.5
≥7.62 (3.0)	≤1.256	33.02 (13.0)	544 (1200)	G-4214 or G-4292	12.7
≥10.16 (4.0)	≤1.256	33.02 (13.0)	544 (1200)	G-4214 or G-4292	9.0
≥15.24 (6.0)	≤1.256	33.02 (13.0)	568 (1252)	G-4292	4.7
≥30.48 (12.0)	≤1.256	33.02 (13.0)	1582 (3488)	G-4273-6	13.1
≥2.54 (1.0)	≤1.256	27.94 (11.0)	535 (1180)	G-4214	50.0
≥5.08 (2.0)	≤1.256	27.94 (11.0)	544 (1200)	G-4214 or G-4292	23.5
≥7.62 (3.0)	≤1.256	27.94 (11.0)	544 (1200)	G-4214 or G-4292	15.2
≥10.16 (4.0)	≤1.256	27.94 (11.0)	544 (1200)	G-4214 or G-4292	10.8
≥15.24 (6.0)	≤1.256	27.94 (11.0)	568 (1252)	G-4292	5.8
≥30.48 (12.0)	≤1.256	27.94 (11.0)	1582 (3488)	G-4273-6	16.0

(8) RMI Forged Billets. Unirradiated ≤0.956 and ≤1.256 wt% ^{235}U enriched uranium metal RMI (Radioactive Materials, Inc) Forged Billets packaged in Model G-4255 SBWSC as follows:

RMI Forged Billets Type, Length, cm(in)	^{235}U wt%	OD/ID cm(inches)	No. Billets per package	Authorized Model	Criticality Safety Index
Mark I Outer 40.6 to 53.3 (16 to 21)	≤1.256	17.7/7.1 (6.98/2.8)	2	G-4255	14.3
Mark I Inner 40.6 to 53.3 (16 to 21)	≤0.956	13.6/3.4 (5.37/1.34)	4	G-4255	5.1
Mark IV Outer 40.6 to 53.3 (16 to 21)	≤0.956	17.7/6.4 (6.98/2.51)	2	G-4255	4.0
Mark IV Inner 40.6 to 53.3 (16 to 21)	≤0.956	13.9/3.2 (5.46/1.26)	4	G-4255	5.3

(9) Mark 15 Ingots and FERMCO Product Ingots. Unirradiated ≤1.106 and ≤1.256 wt% ^{235}U enriched uranium metal packaged as follows:

Ingot Type	^{235}U wt%	OD/ID x L cm (inches)	No. Ingots per SBWSC	Authorized Model SBWSC	Criticality Safety Index
Mark 15 Outer	≤1.106	22.86/8.10 x 73.66 (9.00/3.19 x 29.0)	2	G-4273-5	9.2
Mark 15 Inner	≤1.106	20.32/5.18 x 48.3 (8.00/2.04 x 19.0)	4	G-4273-5	10.2
FERMCO Product	≤1.256	33.15/7.29 x 30.5-43.2 (13.05/2.87 x 12.0-17.0)	2	G-4273-6	7.6

(d) Conditions

(1) The SBWSC must be prepared for shipment and operated in accordance with the requirements of Chapter 7, Operating Procedures, in the SARP.

(2) Each SBWSC must meet the Acceptance Tests and Maintenance Program described in Chapter 8 of the SARP.

(3) Shipments of SBWSC must be exclusive use.

(4) The major part of each SBWSC must have a unique serial number. The owner of each SBWSC is responsible for assigning the serial number, compiling package acceptance, maintenance, and operating records by serial number, and retaining these records in accordance with Chapter 9 of the SARP.

(5) The uniquely identified tamper indicating device (TID) shall be applied to either the door of a vehicle or cargo container or to the SBWSC itself so that the SBWSC cannot be opened without irreparably damaging the unique TID or the SBWSC.

(6) This Certificate of Compliance does not relieve the shipper or the carrier from complying with vehicle loading requirements.

(7) The radiation dose rate at the surface of each SBWSC must not exceed 2 mSv/h.

(8) Both the minimum length of the FERMCO Scrap pieces and the maximum mass U in each SBWSC shall be verified by QA inspector as satisfying one of the contents authorized in 5.(c)(7) of this certificate.

(9) Transport by air of fissile material is not authorized.

(10) In addition to the requirements of Subpart H of 10 CFR Part 71, the SBWSC must satisfy the Quality Assurance requirements of Chapter 9 of the SARP.

(11) Each SBWSC must be weighed after loading and closing and shall not exceed the following gross weights:

SBWSC Model Number	Maximum Gross Weight kg (lb)
G-4214	572 (1260)
G-4255	664 (1464)
G-4273-5	1370 (3020)
G-4273-6	1647 (3632)
G-4292	604 (1332)

PACKAGE CERTIFICATION APPROVAL RECORD
Certificate of Compliance USA/5467/AF-85 (DOE), Revision 24
Steel Banded Wooden Shipping Containers, Models G-4214, G-4255, G4273, and G-4292

Docket 13-07-54677

Revision 24 of Department of Energy (DOE) Certificate of Compliance (CoC) USA/5467/AF-85 (DOE) for Steel Banded Wooden Shipping Containers, Models G-4214, G-4255, G4273, and G-4292 is issued to renew the CoC for 5 years. There have been no changes to the CoC since the last renewal, Revision 23, which was issued on September 25, 2007. Revision 24 is in the current DOE CoC format. The old term for the criticality determined "Minimum Transport Index" which was shown in Revision 23, has been changed to the current term, "Criticality Safety Index."

The expiration date for Revision 24 is November 30, 2017.

This certificate constitutes authority for the Department of Energy to use Steel Banded Wooden Shipping Containers, Models G-4214, G-4255, G4273 and G-4292 for shipment of the authorized contents under 49 CFR 173.7(d).

Stephen C. O'Connor
Headquarters Certifying Official
Director, Office of Packaging and Transportation

Date: 12/05/12