U.S. Department
of Transportation

Pipeline and
Hazardous Materials
Safety Administration

1200 New Jersey Ave. S.E.
Washington, D.C. 20590

COMPETENT AUTHORITY CERTIFICATION
FOR A TYPE B(U)
RADIOACTIVE MATERIALS PACKAGE DESIGN
CERTIFICATE USA/6306/B(U), REVISION 16

REVALIDATION OF CANADIAN COMPETENT AUTHORITY CERTIFICATE CDN/2012/B(U)

This certifies that the radioactive materials package design described below is hereby approved for use within the United States for import and export shipments only. Shipments must be made in accordance with the applicable regulations of the International Atomic Energy Agency[1] and the United States of America[2].

1. Package Identification - MDS Nordion F-168 Shipping Flask, Serial Nos. 20, 21, 28, 31, 32, 33, 36, 38, 39, 42 to 52 inclusive.

2. Packaging Description and Authorized Radioactive Contents - as described in Canadian Certificate of Competent Authority CDN/2012/B(U), Revision 22 (attached).

3. General Conditions -

   a. Each user of this certificate must have in his possession a copy of this certificate and all documents necessary to properly prepare the package for transportation. The user shall prepare the package for shipment in accordance with the documentation and applicable regulations.

   b. Each user of this certificate, other than the original petitioner, shall register his identity in writing to the Office of Hazardous Materials Technology (PHH-23), Pipeline and Hazardous Materials Safety Administration, U.S. Department of Transportation, Washington, D.C. 20590-0001.

   c. This certificate does not relieve any consignor or carrier from compliance with any requirement of the Government of any country through or into which the package is to be transported.

4. Marking and Labeling - The package shall bear the marking USA/6306/B(U) in addition to other required markings and labeling.

5. Expiration Date - This certificate expires on March 31, 2012.

---

[1] "Regulations for the Safe Transport of Radioactive Material, 1996 Edition (Revised), No. TS-R-1 (ST-1, Revised)," published by the International Atomic Energy Agency (IAEA), Vienna, Austria.

[2] Title 49, Code of Federal Regulations, Parts 100-199, United States of America.

CERTIFICATE USA/6306/B(U), REVISION 16

This certificate is issued in accordance with paragraph 816 of the IAEA Regulations[1] and Section 173.473 of Title 49 of the Code of Federal Regulations[2], in response to the petition and information dated February 5, 2008 submitted by MDS Nordion, Kanata, Canada and in consideration of other information on file in this Office.

Certified by:

for Bob Richard
Deputy Associate Administrator for Hazardous Materials Safety

MAR 18 2008
(DATE)

Revision 16 - Issued to revalidate Canadian Certificate of Competent Authority No. CDN/2012/B(U), Revision 22, and to extend the expiration date.

Canadian Certificate No.	Issue Date	Expiry Date	CNSC File
CDN/2012/B(U) (Rev. 22)	**Feb-05-2008**	**Mar-31-2012**	**30-A2-94-0**

Certificate
for
Transport Package Design

The transport package design identified below is certified by the Canadian Nuclear Safety Commission pursuant to paragraph 21(1)(h) of the *Nuclear Safety and Control Act* and Section 7 of the *Packaging and Transport of Nuclear Substances Regulations*, and to the 1973 Revised Edition (as amended) of the IAEA *Regulations for the Safe Transport of Radioactive Material.*

REGISTRATION OF USE OF PACKAGES

All users of this authorization shall register their identity in writing with the Canadian Nuclear Safety Commission prior to the first use of this authorization and shall certify that they possess the instructions necessary for preparation of the package for shipment.

PACKAGE IDENTIFICATION

Designer: **MDS Nordion**

Make/Model: **F-168 Shipping Flask, Serial Nos. 20, 21, 28, 31, 32, 33, 36, 38, 39, 42 to 52 inclusive.**

Mode of Transport: **Air, Sea, Road, Rail**

IDENTIFICATION MARK

The package shall bear the competent authority identification mark **"CDN/2012/B(U)"**.

PACKAGE DESCRIPTION

The F-168 packaging, as shown on MDS Nordion Drawing Nos. F116801-001, (Rev. P) and F116801-020, (Rev. F), consists of a lead filled (266 mm lead shielding) steel encased right cylinder with external fins, insulated steel flame shields on the top and side, steel covered insulation on the bottom and an optional heat screen on the top. The package is permanently mounted on a structural steel base. The containment system is the source assembly.

An illustration of the package is shown on attached Drawing No. F-168, (Rev. 32).

The configuration of the package is as follows:

Shape:	**Cylinder**	Shielding:	**Lead**
Mass:	**5445 kg**	Outer Casing:	**Steel**
Length:	**1372 mm**	Height:	**1659 mm**
Width:	**1372 mm**	Diameter:	**1013 mm**

Canadian Certificate No.	Issue Date	Expiry Date	CNSC File
CDN/2012/B(U) (Rev. 22)	**Feb-05-2008**	**Mar-31-2012**	**30-A2-94-0**

AUTHORIZED RADIOACTIVE CONTENTS

See Appendix A

QUALITY ASSURANCE

Quality assurance for the use, maintenance and inspection of the package shall be in accordance with:

- MDS Nordion Specification No. IN/QA 0224 Z000 (7)*, "Radioactive Material Transport Package Quality Plan"
- MDS Nordion Document No. IN/OP 0019 Z000 (13)*, "Radioactive Material Transport Packaging Inspection and Maintenance Procedure"
- Canadian Packaging and Transport of Nuclear Substances Regulations
- IAEA Regulations
- * or latest current revision

SHIPMENT

The preparation for shipment of the package shall be in accordance with:

- MDS Nordion Specification No. IN/PP 0517 F168 (14), "Preparation for Shipment of the F-168 and F-168-X Transport Packagings"
- Canadian Packaging and Transport of Nuclear Substances Regulations
- IAEA Regulations

This certificate does not relieve the shipper from any requirement of the government of any country through or into which the package will be transported.

Canadian Certificate No.	Issue Date	Expiry Date	CNSC File
CDN/2012/B(U) (Rev. 22)	**Feb-05-2008**	**Mar-31-2012**	**30-A2-94-0**

A. Régimbald
Designated Officer pursuant to paragraph 37(2)(a)
of the Nuclear Safety and Control Act

Appendix A

Radionuclide	Max. Quantity TBq (curies)	Form	Max. Decay Heat (watts)	Encapsulation
Cobalt-60	7,400 (200,000)	metal pellets, metal wafers, metal slugs, stainless steel clad wire, aluminum clad cobalt slugs	3,200	C132, C133, C146, C151, C177, C185, C188, C189, C190, C198, C199, C200, C238, TC239, C246, C247, C248, C252, C306, C335, XC318, XC325
Cobalt-60	2,590 (70,000)	metal slug aluminum sheathed	1,070	C-350 in F359 carrier
Cobalt-60	5,550 (150,000)	metal slug nickel plated	2,320	C351 in F179 carrier with central position empty
Antimony-124	1,850 (50,000)	cast metal	660	C232
Cesium-137	3,700 (100,000)	cesium chloride	522	Special Form with double encapsulation in stainless steel

Combination loading of the above materials is authorized provided that the sum of the ratios of loaded activity to authorized activity, for all material loaded, does not exceed one.

Parts List

1. Upper Fireshield
2. Heat Screen
3. Retaining Brackets (4) for Upper Fireshield
4. Radiation Caution Plate (2)
5. MDS Nordion Identification Plate (2)
6. Fireshield (Removable) Laminated Construction:
   2 x 6.3 mm (0.25 in.) Steel + 25.4 mm (1 in.) Kaowool
   O.D. 1,013 mm (39.88 in.)
7. Warning Plate "CAUTION - HEAT EMITTER - DO NOT STORE IN INSULATED OR REFRIGERATION CONTAINER OR INSULATED SPACE" (2)
8. Transite - Steel Encased
9. Vermiculite Packing
10. Gasket (Neoprene)
11. 7/8 -9 x 2 in. long Hex Bolt (8)
12. Wire Seal
13. 3/8 in. NPT Pipe Plug (2)
14. Plug Lift Lug
15. Vent Tube
16. Plug
17. Cavity: 479 mm x 162 mm Dia. (18.87 in. x 6.37 in. Dia.)
18. Radioactive Contents and Carrier
19. Drain Tube
20. 3/4 -10 x 2 in. Hex Bolt for Skid (4)
21. Removable Shipping Skid, 1,370 mm (54 in.) square
22. Nipple and Drainline Cap
23. Shield Plate with 3/8 -16 Screws (3)
24. Category Label (2): on two opposite sides
25. Eye Bolt
26. Eye Bolt Cover
27. UN Number Label (2): one next to each radioactive category label

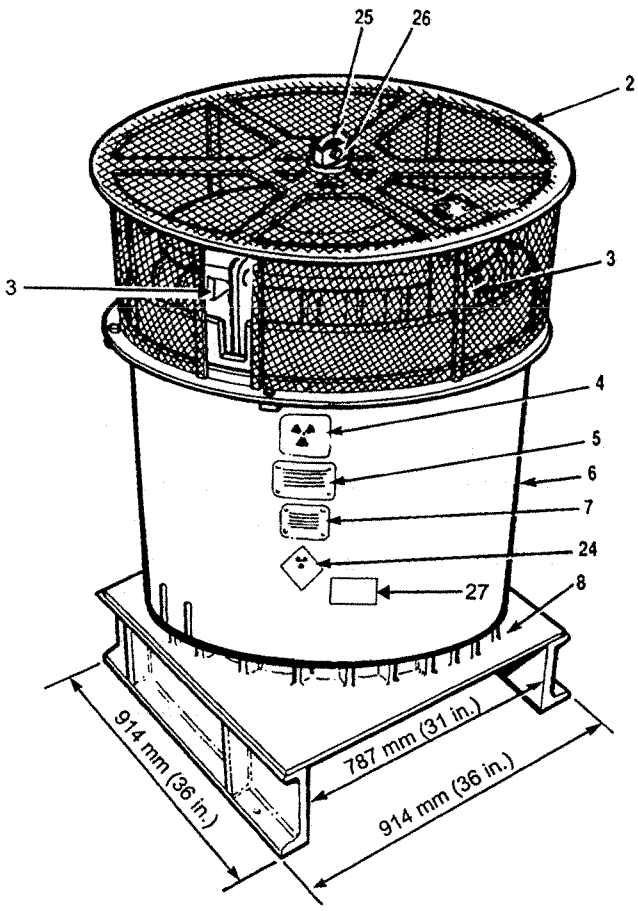

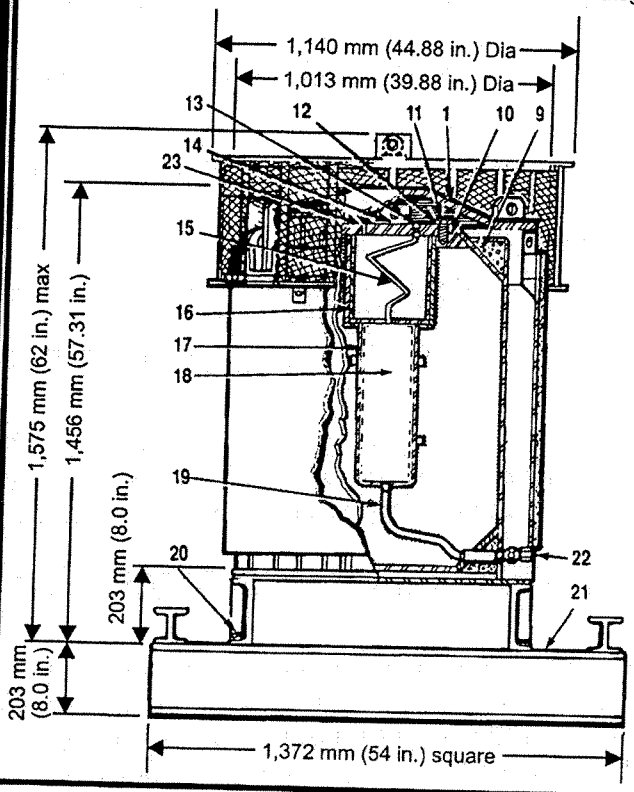

Notes

1. CNSC Certificate CDN/2012/B(U)
2. Meets IAEA Type B(U) Requirements
3. Steel encased lead shielding: 266 mm (10.5 in.)
4. Gross Weight: 5,445 kg (12,000 lb.)
5. Plug Weight: 177 kg (390 lb.)
6. Projected Floor Loading: 2,900 kg/m² (593 lb./ft.²)
7. Radionuclides carried:
   1. Cobalt-60
   2. Antimony-124
   3. Cesium-137
8. Labels may be positioned as illustrated, or 45° to that shown
9. Heat screen used only for air and non-exclusive use shipments

MDS Nordion
447 March Road, P.O. Box 13500
Kanata, Ontario, Canada, K2K 1X8
Tel: (613) 592-2790 · Fax. (613) 592-6937

THIS DRAWING IS THE PROPERTY OF MDS NORDION AND IS SUBMITTED FOR CONSIDERATION ON THE UNDERSTANDING THAT THERE SHALL BE NO EXPLOITATION OF ANY INFORMATION CONTINUED HEREIN EXCEPT WITH THE SPECIFIC WRITTEN AGREEMENT OF MDS NORDION.

TITLE	**F-168 Transport Package**		
REF.	IN/SS 1192 F168 F116801-001/F116801-020	REVISED June 03	DCN A1944-D-10B
DATE	November 1965	No. **F-168**	ISSUE **32**
DRAWN BW	CHECKED KD	APPROVED MK	SHEET 1 OF 1

U.S. Department
of Transportation

**Pipeline and
Hazardous Materials
Safety Administration**

**East Building, PHH-23
1200 New Jersey Avenue SE
Washington, D.C. 20590**

CERTIFICATE NUMBER: USA/6306/B(U)-96, Revision 16

ORIGINAL REGISTRANT(S):

Mr. Marc-Andre Charette
Manager, Regulatory Affairs
MDS Nordion
447 March Road
Ottawa, K2K 1X8
CANADA

Luc Desgagne
Senior Licensing Coordinator
MDS Nordion
447 March Road
Ottawa, Ontario K2K 1X8
CANADA

Mr. Marc-Andre Charette
Manager, Regulatory Affairs
MDS Nordion
447 March Road
Ottawa, K2K 1XB
CANADA