U.S. Department
of Transportation

Pipeline and
Hazardous Materials
Safety Administration

1200 New Jersey Ave. S.E.
Washington, D.C. 20590

COMPETENT AUTHORITY CERTIFICATION
FOR A TYPE B(U)
RADIOACTIVE MATERIALS PACKAGE DESIGN
CERTIFICATE USA/6217/B(U), REVISION 17

REVALIDATION OF CANADIAN COMPETENT AUTHORITY CERTIFICATE CDN/2003/B(U)

This certifies that the radioactive materials package design described below is hereby approved for use within the United States for import and export shipments only. Shipments must be made in accordance with the applicable regulations of the International Atomic Energy Agency[1] and the United States of America[2].

1. Package Identification - MDS Nordion F-143 Transfer Case, Serial Nos. 20, 50, 53, 54, 59, 62 and 64; F-158 Transfer Case, Serial Nos. 3, 4, 5, 6, 8, 9, 10 and 14.

2. Packaging Description and Authorized Radioactive Contents - as described in Canadian Certificate of Competent Authority CDN/2003/B(U), Revision 15 (attached).

3. General Conditions -

   a. Each user of this certificate must have in his possession a copy of this certificate and all documents necessary to properly prepare the package for transportation. The user shall prepare the package for shipment in accordance with the documentation and applicable regulations.

   b. Each user of this certificate, other than the original petitioner, shall register his identity in writing to the Office of Hazardous Materials Technology (PHH-23), Pipeline and Hazardous Materials Safety Administration, U.S. Department of Transportation, Washington, D.C. 20590-0001.

   c. This certificate does not relieve any consignor or carrier from compliance with any requirement of the Government of any country through or into which the package is to be transported.

4. Marking and Labeling - The package shall bear the marking USA/6217/B(U) in addition to other required markings and labeling.

5. Expiration Date - This certificate expires on March 31, 2012.

---

[1] "Regulations for the Safe Transport of Radioactive Material, 1996 Edition (Revised), No. TS-R-1 (ST-1, Revised)," published by the International Atomic Energy Agency (IAEA), Vienna, Austria.

[2] Title 49, Code of Federal Regulations, Parts 100-199, United States of America.

CERTIFICATE USA/6217/B(U), REVISION 17

This certificate is issued in accordance with paragraph 816 of the IAEA Regulations[1] and Section 173.473 of Title 49 of the Code of Federal Regulations[2], in response to the petition and information dated April 1, 2008 submitted by MDS Nordion, Kanata, Canada and in consideration of other information on file in this Office.

Certified by:

JUN 10 2008

Bob Richard
Deputy Associate Administrator for Hazardous Materials Safety

(DATE)

Revision 17 - Issued to revalidate Canadian Certificate of Competent Authority No. CDN/2003/B(U), Revision 15, and to extend the expiration date.

Canadian Certificate No.	Issue Date	Expiry Date	CNSC File
CDN/2003/B(U) (Rev. 15)	**Mar-31-2008**	**Mar-31-2012**	**30-A2-126-0**

Certificate
for
Transport Package Design

The transport package design identified below is certified by the Canadian Nuclear Safety Commission pursuant to paragraph 21(1)(h) of the *Nuclear Safety and Control Act* and Section 7 of the *Packaging and Transport of Nuclear Substances Regulations*, and to the 1973 Revised Edition (as amended) of the IAEA *Regulations for the Safe Transport of Radioactive Material.*

REGISTRATION OF USE OF PACKAGES

All users of this authorization shall register their identity in writing with the Canadian Nuclear Safety Commission prior to the first use of this authorization and shall certify that they possess the instructions necessary for preparation of the package for shipment.

PACKAGE IDENTIFICATION

Designer:	**MDS Nordion**
Make/Model:	**F-143 Transfer Case, Serial Nos. 20, 50, 53, 54, 59, 62, 64 and F-158 Transfer Case, Serial Nos. 3, 4, 5, 6, 8, 9, 10, 14**
Mode of Transport:	**Air, Sea, Road, Rail**

IDENTIFICATION MARK

The package shall bear the competent authority identification mark **"CDN/2003/B(U)"**.

PACKAGE DESCRIPTION

The packaging is comprised of a type F-143 Transfer Case with a fire shield as shown on MDS Nordion Drawing No. F614301-001 (Rev. A) or a Type F-158 Transfer Case with a fire shield as shown on the illustrations listed on Identification List A06414 (Rev. B).

The transfer cases have a 250 mm thick lead-shielded, steel-encased inner container and are similar except for the shape and size of the source drawer. The source drawer of the F-158 is round or square and longer than the square drawer of the F-143. The containment system consists of the capsule assembly, the drawer assemblies, end blocks, hinged doors and the steel-encased lead-shielded inner container. The transfer case is covered on the top and sides by a shield constructed to provide fire and impact limiting properties and on the bottom by a steel encased "Transite" sheet attached to the shipping skid.

The outer box of the shield is reinforced sheet metal and envelopes a 45 mm thick layer of cedar lined by a sheet of 12.7 mm plywood. A nominal 12.7 mm air gap separates the plywood from a blanket of 12.7 mm refractory material which is bonded to a sheet metal box that forms the inside surface of the fireshield.

Canadian Certificate No.	Issue Date	Expiry Date	CNSC File
CDN/2003/B(U) (Rev. 15)	**Mar-31-2008**	**Mar-31-2012**	**30-A2-126-0**

Two illustrations of the package are shown on attached Drawing Nos. DS 1095 F143 (Rev. 12) and DS 1096 F158 (Rev. 7).

The configuration of the F-143 Transfer Case is as follows:

Shape: **N/A**
Mass: **2080 kg**
Length: **1118 mm**
Width: **864 mm**

Shielding: **Lead**
Outer Casing: **Steel**
Height: **1245 mm**
Diameter: **n/a**

The configuration of the F-158 Transfer Case is as follows:

Shape: **N/A**
Mass: **2080 kg**
Length: **1118 mm**
Width: **864 mm**

Shielding: **Lead**
Outer Casing: **Steel**
Height: **1245 mm**
Diameter: **n/a**

AUTHORIZED RADIOACTIVE CONTENTS

This package is authorized to contain:

a) not more than 444 TBq (12,000 curies) of Cobalt 60 metal doubly encapsulated in C146 or C151 welded stainless steel capsules or in any doubly encapsulated stainless steel capsule assemblies or in any capsule which meets special form requirements. The decay heat output from this material shall not exceed 200 watts; or

b) not more than 296 TBq (8,000 curies) of Cesium 137 as "normal form" cesium chloride doubly encapsulated within C161 Type 2 or 3 welded stainless steel capsule assemblies. The decay heat output from this material shall not exceed 40 watts.

QUALITY ASSURANCE

Quality assurance for the use, maintenance and inspection of the package shall be in accordance with:

- MDS Nordion Specification No. IN/QA 0224 Z000 (7)*, Radioactive Material Transport Package Quality Plan
- MDS Nordion Document No. IN/OP 0019 Z000 (13)*, Radioactive Material Transport Packaging Inspection and Maintenance Procedure
- Canadian Packaging and Transport of Nuclear Substances Regulations
- IAEA Regulations

Canadian Certificate No.	Issue Date	Expiry Date	CNSC File
CDN/2003/B(U) (Rev. 15)	**Mar-31-2008**	**Mar-31-2012**	**30-A2-126-0**

- * or latest current revision

SHIPMENT

The preparation for shipment of the package shall be in accordance with:

- MDS Nordion Document No. IN/PP 1521 F143/F158 (1), Preparation for Shipment of F-143 and F-158 Type B(U) Radioactive Material Transport Package
- Canadian Packaging and Transport of Nuclear Substances Regulations
- IAEA Regulations

This certificate does not relieve the shipper from any requirement of the government of any country through or into which the package will be transported.

A. Régimbald
Designated Officer pursuant to paragraph 37(2)(a)
of the Nuclear Safety and Control Act

Parts List

1. Removable plate (2): with steel encased transite
2. Drawer chambers
3. Container lifting handles (4)
4. Radiation caution plate (4): on two opposite sides of fireshield and on two opposite sides of transfer case
5. Shipping container identification label (4): on two opposite sides of fireshield and on two opposite sides of transfer case
6. Lead shielding
7. Fireshield - cedar - plywood - kaowool - steel box (inner)
8. Outer steel box on fireshield
9. Lifting handles (4)
10. Lead wire seal (2)
11. Steel jacket 0.63 cm (0.25 in.)
12. Vermiculite
13. Fireshield bolts ½ -13 x 2.5 in. LG hex hd (18)
14. Skid
15. Square or round drawer shipping blocks
16. Hinged door (2): (8) bolts each door 5/8 in. - 11 UNC x 1 in. LG hex hd
17. Neoprene gasket (2)
18. Radioactive category label (2): on two opposite sides
19. UN number label (2): on two opposite sides, next to radioactive category labels
20. Lead wire seal (1)

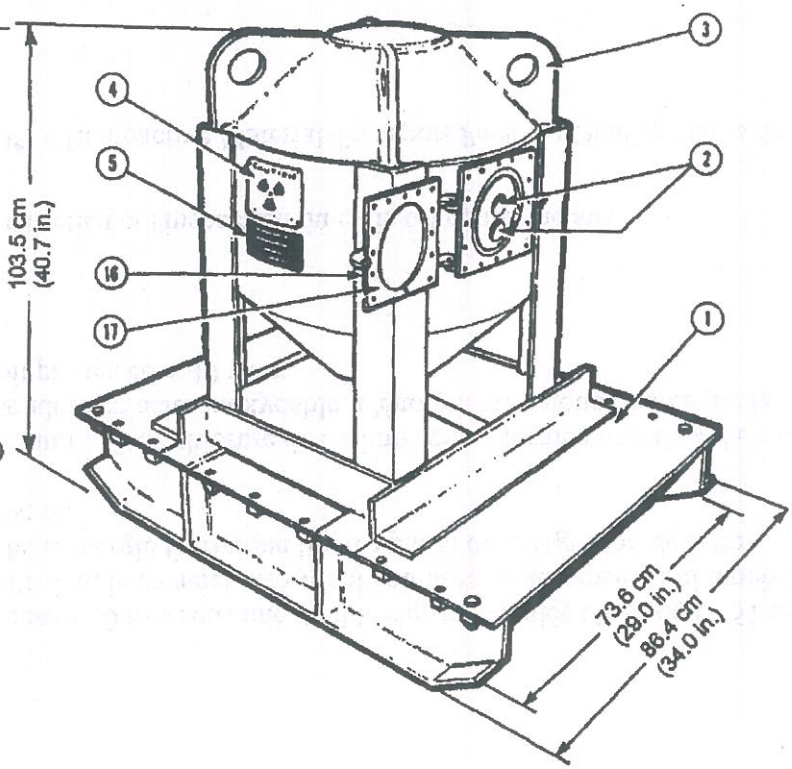

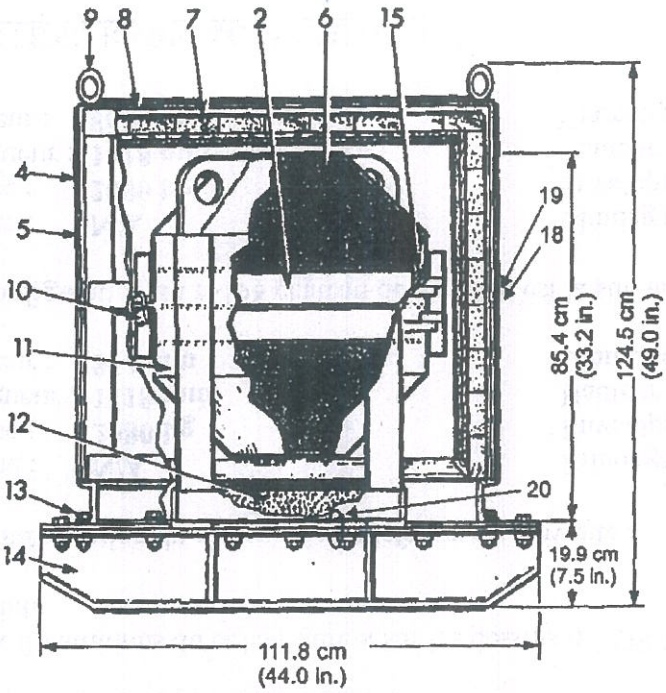

Notes

1. CNSC certification CDN/2003/B(U)
2. Conforms to IAEA type B(U)
3. Lead shielding 25.4 cm (10 in.) steel encased
4. Maximum nominal weight: 2,080 kg (4,590 lb.)
5. Projected floor loading: 0.216 kg/cm² (442 lb./ft.²)
6. Approved contents:
   12,000 curies cobalt-60
   8,000 curies cesium-137

MDS Nordion

447 March Road, P.O. Box 13500
Kanata, Ontario, Canada, K2K 1X8
Tel: (613) 592-2790 · Fax. (613) 592-6937

THIS DRAWING IS THE PROPERTY OF MDS NORDION INC. AND IS SUBMITTED FOR CONSIDERATION ON THE UNDERSTANDING THAT THERE SHALL BE NO EXPLOITATION OF ANY INFORMATION CONTAINED HEREIN EXCEPT WITH THE SPECIFIC WRITTEN AGREEMENT OF MDS NORDION INC.

TITLE

Modified Senior Transfer Case Round or Square Drawer

REF. A06414 IN/SS 1975 F158		REVISED Oct03	DCN A2490-D-03A
DATE November 1971		No. F-158	ISSUE 7
DRAWN JC	CHECKED BM	APPROVED MK	SHEET 1 OF 1

Remarques

1. Certificat de la CCSN CDN/2003/B(U)
2. Conforme au type B(U) de AIEA
3. Écran de protection - 25.4 cm (10.0 po.) de plomb encapsulé d'acier
4. Poids brut - 2,080 kg (4,590 po.)
   Poids du pare-feu - 227 kg (500 lb.)
5. Charge du plancher (basse sur la superficie prévue du plancher) - 0.216 kg/cm² (442 lb/pi.²)
6. Ce conteneur sert a l'expédition de sources de thérapie à faisceau (alvéole carrée seulement)
7. Blocs d'extrémité - F197 - pour alvéole no. G143A, G172, G173 et G173A - 2.54 cm (1.0 po.) d'épaisseur
   - F195 - pour alvéole no. G643, G674, G675 et G675A - 2.69 cm (1.06 po.) d'épaisseur
   - F194 - pour alvéole no. G343, G344 et G344A - 6.50 cm (2.56 po.) d'épaisseur
   - F193 - pour alvéole no. G243, G272, G273 et G273A - 4.45 cm (1.75 po.) d'épaisseur
   - F196 - pour modèle SHDI-T2-82 et SENTW-1-120 de Siemens - 10.57 cm (4.12 po.) d'épaisseur

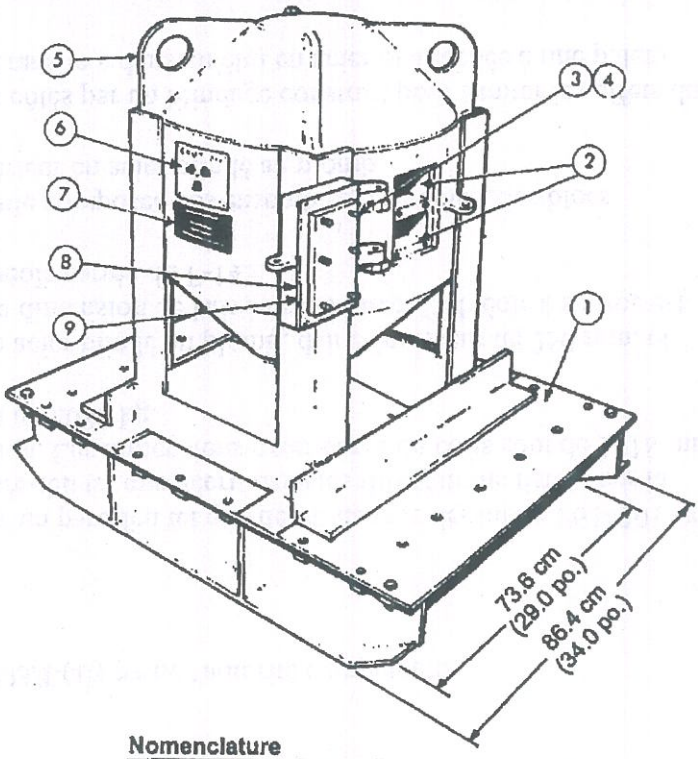

CONTENANCE

SUBSTANCE	COBALT-60	CAESIUM-137
Contenance Max.	12,000 Ci.	8,000 Ci.

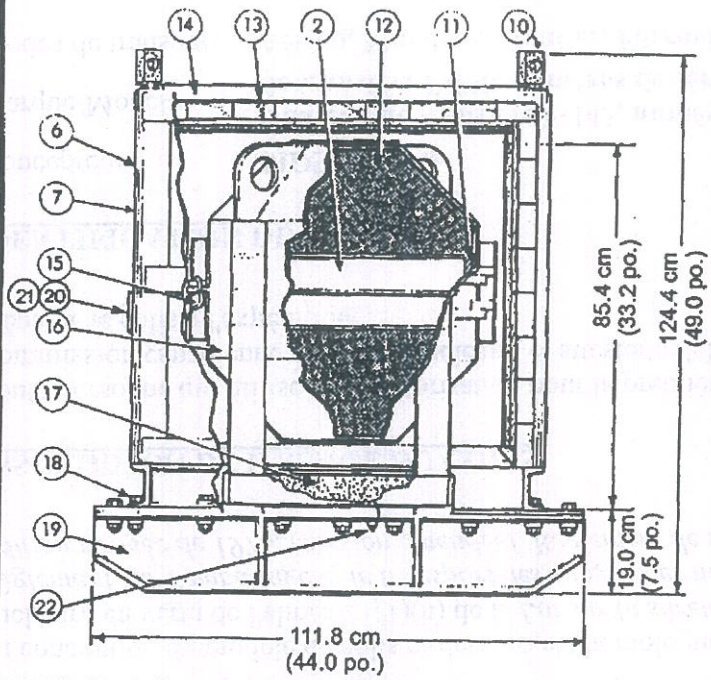

Nomenclature

1. Plaque amovible (2) - munie de "transite" entouré d'acier
2. Alvéoles - 7.6 cm² x 59.0 cm de large (3.0 po.² x 23.25 po. de large)
3. Vis à tête creuse (12) - ½ - 13 x 2 po. de large
4. Joint de type torique (12)
5. Patte de levage du récipient (4)
6. Plaque de mise en garde contre les rayonnements (3) - sur deux côtés opposés du pare-feu et sur le château de transfert
7. Étiquettes d'identification du conteneur d'expédition (4) - sur deux côtés opposés du pare-feu et sur deux côtés opposés du château de transfert
8. Porte articulée (2)
9. Joint en neoprène (2)
10. Poignées de levage du pare-feu avec couvercles installés
11. Blocs d'extrémité (4) - voir note 7
12. Écran de protection en plomb
13. Pare-feu - cèdre - contre-plaqué-"kaowool" - boîte en acier (interne)
14. Boîte externe en acier du pare-feu
15. Fil de scellage (2)
16. Manchon en acier de 0.63 cm (1/4 po.)
17. Garniture en vermiculite
18. Boulon hex (24) - ½ - 13 x 2 ½ po. de large
19. Patin pour expédition
20. Étiquette de catégorie radioactive (2) - sur deux côtés opposés
21. Étiquette avec numéro NU (2) - sur deux côté opposés, à côtés des étiquettes de radioactivité
22. Fil de scellage en plomb (1)

MDS Nordion

447 March Road, P.O. Box 13500
Kanata, Ontario, Canada, K2K 1X8
Tel: (613) 592-2790 · Fax. (613) 592-6937

TITRE

Colis de transport F-143 de Type B(U)

REF. TC-1-1(TC-1-38)		REVISE Dec 02	DCN A2490-D-03A
DATE Novembre 1963		No. F-143	Rev. 12
DESSINE PAR GW	VERIFIE PAR KD	APPROUVE PAR MK MK	Feuille 2 DE 2

THIS DRAWING IS THE PROPERTY OF MDS NORDION INC. AND IS SUBMITTED FOR CONSIDERATION ON THE UNDERSTANDING THAT THERE SHALL BE NO EXPLOITATION OF ANY INFORMATION CONTAINED HEREIN EXCEPT WITH THE SPECIFIC WRITTEN AGREEMENT OF MDS NORDION INC.

U.S. Department
of Transportation

**Pipeline and
Hazardous Materials
Safety Administration**

**East Building, PHH-23
1200 New Jersey Avenue SE
Washington, D.C. 20590**

CERTIFICATE NUMBER: USA/6217/B(U)-96, Revision 17

ORIGINAL REGISTRANT(S):

Mr. Marc-Andre Charette
Manager, Regulatory Affairs
MDS Nordion
447 March Road
Ottawa, K2K 1X8
CANADA

Luc Desgagne
Senior Licensing Coordinator
MDS Nordion
447 March Road
Ottawa, Ontario K2K 1X8
CANADA

Mr. Marc-Andre Charette
Manager, Regulatory Affairs
MDS Nordion
447 March Road
Ottawa, K2K 1XB
CANADA

REGISTERED USER(S):

Blair Menna
Best Theratronics Ltd.
Best Theratronics Ltd.
Care of MDS Nordion
447 March Road
Ottawa, K2K 1X8
Canada