U.S. Department
of Transportation

Pipeline and
Hazardous Materials
Safety Administration

400 Seventh St. S.W.
Washington, D.C. 20590

**COMPETENT AUTHORITY CERTIFICATION
FOR A TYPE B(U)
RADIOACTIVE MATERIALS PACKAGE DESIGN
CERTIFICATE USA/6214/B(U), REVISION 20**

**REVALIDATION OF CANDADIAN COMPETENT AUTHORITY
CERTIFICATE CDN/1002/B(U)**

This certifies that the radioactive materials package design described is hereby approved for use within the United States for import and export shipments only. Shipments must be made in accordance with the applicable regulations of the International Atomic Energy Agency[1] and the United States of America[2].

1. Package Identification - MDS Nordion F-327/F-112 Shipping Containers Serial Nos. 10, 11, 20, 29, 31, 33, 34, 36, 37, 40, 43, 61, 62, 64, 65 and 68. MDS Nordion F-327/F-113 Shipping Containers Serial Nos. 1, 4, 5, 7, 8, 9, 10, 13, 15, 16, 17, 18, 20, 22, 23, 24, 26, 27, 28, 29, 30, 32, 33, 35, 36, 38, 40, 41, 42, 43, 44, 46, 47, 49, 51, 56, 57, 59, 60, 61, 63, 64, 65, 66, 68, 69, 72, 73, 74, 76, 77, 78, 105, 106, 107, 108, 109, and 110.

2. Packaging Description and Authorized Radioactive Contents - as described in Canadian Certificate of Competent Authority CDN/1002/B(U), Revision 21 (attached).

3. General Conditions -

   a. Each user of this certificate must have in his possession a copy of this certificate and all documents necessary to properly prepare the package for transportation. The user shall prepare the package for shipment in accordance with the documentation and applicable regulations.

   b. Each user of this certificate, other than the original petitioner, shall register his identity in writing to the Office of Hazardous Materials Technology (PHH-23), Pipeline and Hazardous Materials Safety Administration, U.S. Department of Transportation, Washington, D.C. 20590-0001.

   c. This certificate does not relieve any consignor or carrier from compliance with any requirement of the Government of any country through or into which the package is to be transported.

---

[1] "Regulations for the Safe Transport of Radioactive Material, 1996 Edition (Revised), No. TS-R-1 (ST-1, Revised)," published by the International Atomic Energy Agency (IAEA), Vienna, Austria.

[2] Title 49, Code of Federal Regulations, Parts 100-199, United States of America.

CERTIFICATE USA/6214/B(U), REVISION 20

4. Marking and Labeling - The package shall bear the marking USA/6214/B(U) in addition to other required markings and labeling.

5. Expiration Date - This certificate expires on February 28, 2011.

This certificate is issued in accordance with paragraph 816 of the IAEA Regulations[1] and Section 173.473 of Title 49 of the Code of Federal Regulations[2], in response to the petition and information dated August 29, 2008 submitted by MDS Nordion, Kanata, Canada and in consideration of other information on file in this Office.

Certified by:

SEP -3 2008

Bob Richard
for Deputy Associate Administrator for Hazardous Materials Safety

(DATE)

Revision 20 - Issued to revalidate Canadian Certificate of Competent Authority No. CDN/1002/B(U), Revision 21, through February 28, 2011.

Canadian Nuclear Safety Commission | Commission canadienne de sûreté nucléaire

Canadian Certificate No.	Issue Date	Expiry Date	CNSC File
CDN/1002/B(U) (Rev. 21)	**Aug-27-2008**	**Feb-28-2011**	**30-A2-153-0**

Certificate
for
Transport Package Design

RECEIVED
AUG 29 2008
REGULATORY AFFAIRS

The transport package design identified below is certified by the Canadian Nuclear Safety Commission pursuant to paragraph 21(1)(h) of the *Nuclear Safety and Control Act* and Section 7 of the *Packaging and Transport of Nuclear Substances Regulations*, and to the 1973 Revised Edition (as amended) of the IAEA *Regulations for the Safe Transport of Radioactive Material*.

REGISTRATION OF USE OF PACKAGES

All users of this authorization shall register their identity in writing with the Canadian Nuclear Safety Commission prior to the first use of this authorization and shall certify that they possess the instructions necessary for preparation of the package for shipment.

PACKAGE IDENTIFICATION

Designer: **MDS Nordion**
Make/Model: **F-327/F-112 and F-327/F-113**
Mode of Transport: **Air, Sea, Road, Rail**

IDENTIFICATION MARK

The package shall bear the competent authority identification mark **"CDN/1002/B(U)"**.

PACKAGE DESCRIPTION

F-112 Serial Nos: 10, 11, 20, 29, 31, 33, 34, 36, 37, 40, 43, 61, 62, 64, 65, and 68.

F-113 Serial Nos: 1, 4, 5, 7, 8, 9, 10, 13, 15, 16, 17, 18, 20, 22, 23, 24, 26, 27, 28, 29, 30, 32, 33, 35, 36, 38, 40, 41, 42, 43, 44, 46, 47, 49, 51, 56, 57, 59, 60, 61, 63, 64, 65, 66, 68, 69, 72, 73, 74, 76, 77, 78, 105, 106, 107, 108, 109 and 110.

The packaging, as shown on MDS Nordion Drawing No. F132701-001, (Rev. H), consists of a removable head type steel drum with a lead-shielded, stainless steel-encased, gasketted F-112 or F-113 inner container, centered and supported within the drum by a wood lining for thermal and impact protection.

The inner container may contain one of the following auxilliary shielding inserts; F-174, F-286, F-382 or F-389. The containment is provided by either the F-256 or F-260 leak proof inserts or welded stainless steel capsules.

Illustrations of the package models F-327/F-112 and F-327/F-113 are shown on attached Drawing Nos. IS/SS 1476 F327/F112 (Issue 17) and IS/SS 1477 F327/F113 (Issue 17).

The configuration of the F-327/F-112 is as follows:

Shape:	**Cylinder**	Shielding:	**Lead**
Mass:	**61 kg**	Outer Casing:	**Steel**
Length:	**n/a**	Height:	**521 mm**
Width:	**n/a**	Diameter:	**489 mm**

The configuration of the F-327/F-113 is as follows:

Shape:	**Cylinder**	Shielding:	**Lead**
Mass:	**100 kg**	Outer Casing:	**Steel**
Length:	**n/a**	Height:	**521 mm**
Width:	**n/a**	Diameter:	**489 mm**

AUTHORIZED RADIOACTIVE CONTENTS

The authorized radioactive contents shall not exceed the maximum allowable activities for each of the radionuclides listed below. If more than one radionuclide is transported, the activity of each radionuclide divided by the maximum authorized activity, when summed, shall not exceed one.

1. For the authorized radioactive contents listed in TABLE A in the attached appendices, the radioactive material shall be contained in either:

   a. Any welded stainless steel capsule that meets the fabrication and leak test requirements of MDS Nordion Specification No. IS/TS 0010 C000 (Rev. 9), "Technical Specification for Radiography Capsules and Sources"; or

   b. Any MDS Nordion S.A. Type G1, G2, G3, G4, G5, G6, G6A, G6B, G8, G10, G11 or G21 Special Form Capsules containing Cobalt 60 or Iridium 192.

The contents of any individual capsule of Iridium 192 shall not exceed 5550 GBq (150 Ci).

For the authorized radioactive contents listed in TABLE B in the attached appendices, the radioactive material shall be contained in either the F-256 or F-260 leak proof insert.

Not more than 1.9 GBq of Actinium 227/Beryllium encapsulated in welded stainless steel source capsule as shown on Atomic Energy of Canada Ltd., Drawing No. A12063 Issue B, and further identified as source serial number AC-9-38. The source shall be retained within a Lucite shielding insert and a F-112 shipping container.

QUALITY ASSURANCE

Quality assurance for the use, maintenance and inspection of the package shall be in accordance with:

- Canadian Packaging and Transport of Nuclear Substances Regulations
- IAEA Regulations

SHIPMENT

The preparation for shipment of the package shall be in accordance with:

- MDS Nordion Preparation Procedure No. IS/PP 0016 F000 (11), Preparation for Shipment Procedure For the F-327 Family Transport Packagings
- Canadian Packaging and Transport of Nuclear Substances Regulations
- IAEA Regulations

This certificate does not relieve the shipper from any requirement of the government of any country through or into which the package will be transported.

S. Faille
Designated Officer pursuant to paragraph 37(2)(a)
of the Nuclear Safety and Control Act

TABLE A
Maximum Allowable Quantity for Radionuclides Shipped in Sealed Sources or Special Form Capsules
(In GBq)

Radionuclide	Container							
	F-112	F-112/ F-174	F-112/ F-286	F-112/ F-382	F-113	F-113/ F-174	F-113/ F-286	F-113/ F-382
Am-241	18,500	18,500	18,500	18,500	18,500	18,500	18,500	18,500
Co-60	1.11	3.33	1.11	1.30	4.81	9.25	4.81	4.81
Cs-137/ Ba-137	11.4	111	11.4	11.4	178	1,480	178	178
Ir-192	92.5	888	111	296	2,405	9,250	7,400	33,300
Sb-124	1.55	5.18	1.55	1.55	5.55	11.1	5.55	5.55

TABLE B
Maximum Allowable Quantity for Radionuclides Shipped in Leak Proof Inserts
(In GBq)

Radionuclide	Container					
	F-112/ F-256	F-112/ F-256/ F-389	F-112/ F-260/ F-174	F-113/ F-256	F-113/ F-256/ F-389	F-113/ F-260/ F-174
Au-198	0	0	0	2,960	2,960	0
Ba-133	3,500	3,500	0	51,800	0	0
Co-60	1.3	1.3	3.0	4.8	4.8	9.0
Cr-51	74,000	74,000	0	74,000	74,000	0
Cu-64	111	111	370	370	370	0
Fe-55	74,000	74,000	0	74,000	74,000	0
Fe-59	1.85	1.85	7.0	7.5	7.5	22
Hg-197/Hg-197m	44,000	0	0	44,000	44,000	0
I-125	74,000	0	0	74,000	0	0
I-131	190	314	320	5,000	7,300	0
Mo-99	55.5	92.5	259	555	1,030	0
S-35	1,850	1,850	0	1,850	1,850	0
Sn-113/In-113m	50	50	0	1,500	0	0
Yb-169	44,000	0	0	44,000	0	0

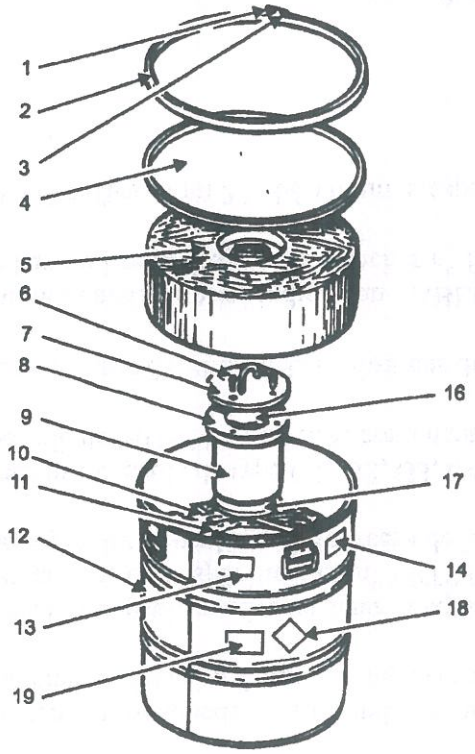

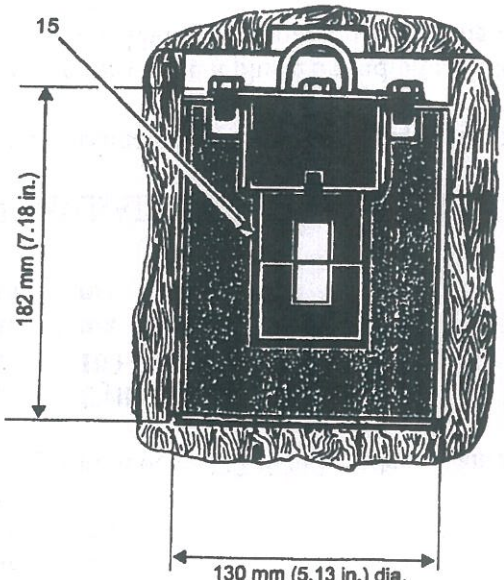

CROSS SECTION THROUGH ITEM 9

Parts List

1. Wire seal in locking bolt
2. Closure ring
3. Locking bolt 5/8 - 11 x 4 in. long
4. Drum lid
5. Wood filler (upper) 4.88 in. (123.8 mm) thick
6. Plug bolts - hex head 1/2 - 13 x 3/4 in. lg (4)
7. Lead filled plug
8. Neoprene gasket
9. Lead filled shielding vessel - 45 lbs. (20.41 kg)
10. Wood filler (middle) 6.13 in. (155.6 mm) thick
11. Wood filler (bottom) 4.88 in. (123.8 mm) thick
12. Steel drum 19.25 in. dia. x 20.5 in. high (489 mm x 521 mm)
13. Radiation caution plate
14. MDS Nordion container identification plate
15. Auxiliary insert (F-174 shown) (see Table)
16. Container cavity - 2.88 in. dia. x 4.22 in. high (72 mm x 107 mm)
    Cavity inserts:
    a) The F-383 stainless steel insert (4 holes) is used with the C-181 welded stainless steel capsules.
    b) The F-286 stainless steel insert (6 holes) is used with the C-204 and C-352 welded stainless steel capsules.
    c) The F-382 tungsten insert (6 holes) is used with the C-204, C-349, C-352 and C-357 welded stainless steel capsules.
    d) If the capsule is not welded stainless steel, the F-256 or F-260 leakproof insert is used.
    e) The F-174 lead/stainless steel insert (25.4 mm (1 in.) lead shielding) is used with the F-260 leakproof insert.
    f) The F-268 lead insert and 1/2 oz glass bottle with absorbent material, are used with the F-256 leakproof insert.
    g) The F-389 tungsten insert and 2-oz. glass bottle with absorbent material are used with the F-256 leakproof insert.
17. Lead shielding disc, 9.7 mm (0.38 in.) thick x 130 mm (5.13 in.) diameter, screwed to item 11.
18. Radioactive Category Labels (2): on opposite sides.
19. UN number labels (2): one next to each of the two radioactive category labels.

Notes

1. CNSC Certificate CDN/1002/B(U)
2. Meets IAEA Type B(U) requirements
3. Package weight 61 kg (135 lb.)
4. Lead Shielding 25.4 mm (1 in.) thick
5. Projected floor loading area: 0.177 m^2 (1.91 $ft.^2$)
6. Floor Loading 345 kg/m^2 (71 $lb./ft.^2$)
7. Accommodates shielding inserts listed in table below, and the F-256 and F-260 leakproof insert.

Shielding Inserts

Insert	Material	Weight
F-174	Lead/Stainless Steel	3.9 kg (8.6 lb.)
F-268	Lead	2.1 kg (4.7 lb.)
F-286	Stainless Steel	3.4 kg (7.5 lb.)
F-382	Tungsten	7.0 kg (15.4 lb.)
F-383	Stainless Steel	3.6 kg (8.0 lb.)
F-389	Tungsten	1.3 kg (2.9 lb.)

MDS Nordion
447 March Road, P.O. Box 13500
Kanata, Ontario, Canada, K2K 1X8
Tel: (613) 592-2790 · Fax. (613) 592-6937

THIS DRAWING IS THE PROPERTY OF MDS NORDION INC. AND IS SUBMITTED FOR CONSIDERATION ON THE UNDERSTANDING THAT THERE SHALL BE NO EXPLOITATION OF ANY INFORMATION CONTAINED HEREIN EXCEPT WITH THE SPECIFIC WRITTEN AGREEMENT OF MDS NORDION INC.

TITLE

F-327/F-112 Transport Packaging

REF. IS/SS 1476 F327/F112 F132701001/A01986		REVISED Aug 03	DCN A1944-D-37B
DATE April 69		No. F-327/F-112	ISSUE 17
DRAWN BW	CHECKED KD	APPROVED MK	SHEET 1 OF 1

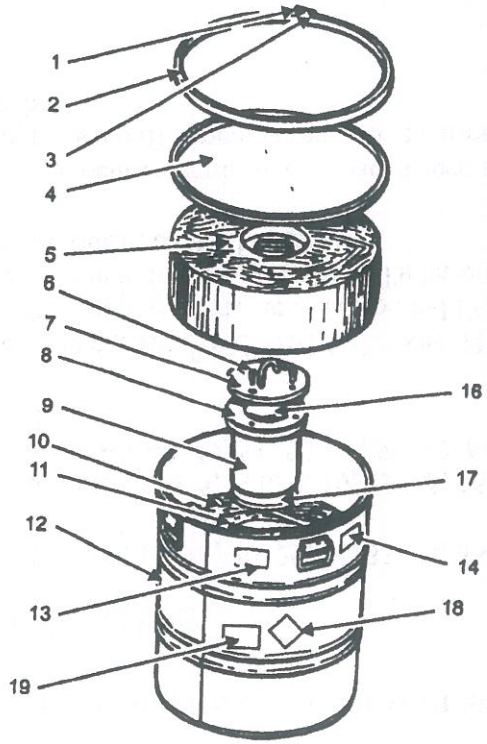

Parts List

1. Wire seal locking bolt
2. Closure ring
3. Locking bolt 5/8 - 11 x 4 in. long
4. Drum lid
5. Wood filler (upper) 123.8 mm (4.88 in.) thick
6. Plug bolts - hex head 1/2 - 13 x 3/4 in. lg (4)
7. Lead filled plug
8. Neoprene gasket
9. Lead filled shielding vessel - 59 kg (130 lb.)
10. Wood filler (middle) 155.6 mm (6.13 in.) thick
11. Wood filler (bottom) 123.8 mm (4.88 in.) thick
12. Steel drum 489 mm dia. x 521 mm high (19.25 in. x 20.5 in.)
13. Radiation caution plate (2)
14. MDS Nordion container identification plate (2)
15. Auxiliary insert (F-174 shown) (see Table)
16. Container cavity - 72 mm dia. x 107 mm high (2.88 in. x 4.22 in.)
    Cavity insert:
    a) The F-383 stainless steel insert (4 holes) is used with the C-181 welded stainless steel capsules.
    b) The F-286 stainless steel insert (6 holes) is used with the C-204 and C-352 welded stainless steel capsules.
    c) The F-382 tungsten insert (6 holes) is used with the C-204, C-349, C-352 and C-357 welded stainless steel capsules.
    d) If the capsule is not welded stainless steel, the F-256 or F-260 leakproof insert is used.
    e) The F-174 lead/stainless steel insert (25.4 mm (1 in.) lead shielding) is used with the F-260 leakproof insert.
    f) The F-268 lead insert and 1/2 oz glass bottle with absorbent material, are used with the F-256 leakproof insert.
    g) The F-389 tungsten insert and 2-oz. glass bottle with absorbent material are used with the F-256 leakproof insert.
17. Lead shielding disc, 9.7 mm (0.38 in.) thick x 184 mm (7.25 in.) diameter, screwed to item 11.
18. Radioactive Category Labels (2): on opposite sides.
19. UN number labels (2): one next to each of the two radioactive category labels

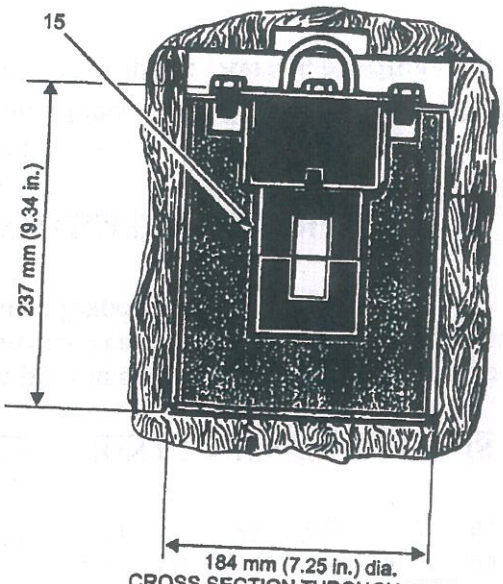

CROSS SECTION THROUGH ITEM 9

Notes

1. CNSC Certificate CDN/1002/B(U)
2. Meets IAEA Type B(U) requirements
3. Package weight 100 kg (220 lb.)
4. Lead Shielding 50.8 mm (2 in.) thick
5. Projected floor loading area: 0.177 m^2 (1.91 $ft.^2$)
6. Floor Loading 554 kg/m^2 (114 $lb./ft.^2$)
7. Accommodates shielding inserts listed in table below, and the F-256 and F-260 leakproof insert.

Shielding Inserts

Insert	Material	Weight
F-174	Lead/Stainless Steel	3.9 kg (8.6 lb.)
F-268	Lead	2.1 kg (4.7 lb.)
F-286	Stainless Steel	3.4 kg (7.5 lb.)
F-382	Tungsten	7.0 kg (15.4 lb.)
F-383	Stainless Steel	3.6 kg (8.0 lb.)
F-389	Tungsten	1.3 kg (2.9 lb.)

MDS Nordion
447 March Road, P.O. Box 13500
Kanata, Ontario, Canada, K2K 1X8
Tel: (613) 592-2790 · Fax. (613) 592-6937

THIS DRAWING IS THE PROPERTY OF MDS NORDION INC. AND IS SUBMITTED FOR CONSIDERATION ON THE UNDERSTANDING THAT THERE SHALL BE NO EXPLOITATION OF ANY INFORMATION CONTAINED HEREIN EXCEPT WITH THE SPECIFIC WRITTEN AGREEMENT OF MDS NORDION INC.

TITLE

F-327/F-113 Transport Packaging

REF. IS/SS 1477 F327/F113 F132701001/A01985		REVISED Aug 03	DCN A1944-D-37B
DATE April 69		No. F-327/F-113	ISSUE 17
DRAWN BW	CHECKED KD	APPROVED MK	SHEET 1 OF 1

U.S. Department
of Transportation

**Pipeline and
Hazardous Materials
Safety Administration**

**East Building, PHH-23
1200 New Jersey Avenue SE
Washington, D.C. 20590**

CERTIFICATE NUMBER: USA/6214/B(U)-85, Revision 20

ORIGINAL REGISTRANT(S):

Mr. Marc-Andre Charette
Manager, Regulatory Affairs
MDS Nordion
447 March Road
Ottawa, K2K 1X8
CANADA

Luc Desgagne
Senior Licensing Coordinator
MDS Nordion
447 March Road
Ottawa, Ontario K2K 1X8
CANADA

Mr. Marc-Andre Charette
Manager, Regulatory Affairs
MDS Nordion
447 March Road
Ottawa, K2K 1XB
CANADA

REGISTERED USER(S):

Ms. Lori Podolak
Product Licensing Specialist
QSA Global, Inc.
40 North Avenue
Burlington, MA 01803

Ms. Cathleen Roughan
Director, Regulatory Affairs and QA
QSA Global, Inc.
40 North Avenue
Burlington, MA 01803

Mr. Michael Fuller
Regulatory Compliance Associate
QSA Global, Inc.
40 North Avenue
Burlington, MA 01803