U.S. Department
of Transportation
Pipeline and
Hazardous Materials
Safety Administration

400 Seventh Street, S.W.
Washington, D.C. 20590

**COMPETENT AUTHORITY CERTIFICATION
FOR A TYPE B(U)
RADIOACTIVE MATERIALS PACKAGE DESIGN
CERTIFICATE USA/6050/B(U), REVISION 14**

REVALIDATION OF CANDADIAN COMPETENT AUTHORITY CERTIFICATE CDN/2005/B(U)

This certifies that the radioactive materials package design described below is hereby approved for use within the United Sates for import and export shipments only. Shipments must be made in accordance with the applicable regulations of the International Atomic Energy Agency[1] and United States of America[2].

1. Package Identification - MDS Nordion Shipping Containers F-144, serial numbers 1, 5, and 9; and F-144-AC, serial number 3.

2. Packaging Description and Authorized Radioactive Contents - as described in Canadian Certificate of Competent Authority CDN/2005/B(U), Revision 14 (attached).

3. General Conditions -

   a. Each user of this certificate must have in his possession a copy of this certificate and all documents necessary to properly prepare the package for transportation in accordance with the endorsed certificate.

   b. Each user of this certificate, other than the original petitioner, shall register his identity in writing to the Office of Hazardous Materials Technology (PHH-23), Pipeline and Hazardous Materials Administration, U.S. Department of Transportation, Washington, D.C. 20590-0001.

   c. This certificate does not relieve any consignor or carrier from compliance with any requirement of the Government of any country through or into which the package is to be transported.

4. Marking and Labeling - The package shall bear the marking USA/6050/B(U) in addition to other required markings and labeling.

5. Expiration Date - This certificate expires on May 31, 2010.

---

1 "Regulations for the Safe Transport of Radioactive Materials, 1996 Edition (Revised), No. TS-R-1 (ST-1 Revised)," published by the International Atomic Energy Agency (IAEA), Vienna, Austria.

2 Title 49, Code of Federal Regulations, Parts 100 - 199, United States of America.

CERTIFICATE USA/6050/B(U), REVISION 14

This certificate is issued in accordance with paragraph 816 of the IAEA Regulations and Section 173.473 of Title 49 of the Code of Federal Regulations, in response to the petition and information dated May 19, 2006 submitted by MDS Nordion, Kanata, Canada and in consideration of other information on file in this Office.

Certified By:

for Robert A. McGuire
Associate Administrator for Hazardous Materials Safety

Oct 19 2006
(DATE)

Revision 14 - Issued to revalidate Canadian Certificate of Competent Authority No. CDN/2005/B(U), Rev. 14.

Canadian Nuclear Safety Commission | Commission canadienne de sûreté nucléaire

Canadian Certificate No.	Issue Date	Expiry Date	CNSC File
CDN/2005/B(U) (Rev.14)	**May-05-2006**	**May-31-2010**	**30-A2-138-0**

Certificate
for
Transport Package Design

The transport package design identified below is certified by the Canadian Nuclear Safety Commission pursuant to paragraph 21(1)(h) of the *Nuclear Safety and Control Act* and Section 7 of the *Packaging and Transport of Nuclear Substances Regulations*, and to the 1973 Revised Edition (as amended) of the IAEA *Regulations for the Safe Transport of Radioactive Material.*

REGISTRATION OF USE OF PACKAGES

All users of this authorization shall register their identity in writing with the Canadian Nuclear Safety Commission prior to the first use of this authorization and shall certify that they possess the instructions necessary for preparation of the package for shipment.

PACKAGE IDENTIFICATION

Designer :	**MDS Nordion**
Make/Model :	**Shipping Containers F-144, serial nos. 1, 5, 9; and F-144-AC, serial no. 3**
Mode of Transport :	**Air, Sea, Road, Rail**

IDENTIFICATION MARK

The package shall bear the competent authority identification mark **"CDN/2005/B(U)"**.

PACKAGE DESCRIPTION

The MDS Nordion Model No. F-144 transport packaging as shown on Nordion Drawings Nos. A05890, (Rev. J) and CP-36B-226, (Rev. L), consists of a lead-filled, steel encased cylindrical assembly, surrounded by a removable fireshield box. The container is bolted to a steel shipping skid by four hex head bolts. There is a 12.7 mm thick steel encased transite thermal insulation attached to the bottom of the skid. The fireshield box is fabricated from steel, wood, and a 12.7 mm thick layer of Kaowool thermal insulation and is secured to the skid on all four sides by 24 hex head bolts. The existing drain line from the source cavity has been permanently sealed with a steel plug.

The Model No. F-144-AC has a cavity plug with a clamping ring and gaskets rather than an integral flange.

The containment system consists of the welded source assemblies, the source cavity of the container and when required, the F-166 insert assembly.

Illustrations of the packages are shown on attached Drawing Nos. F-144, (Rev. 12) and F 144 AC, (Rev. 3).

Canada

The configuration of the package is as follows:

Shape:	**Cube**	Shielding:	**Lead**
Mass:	**1680 kg**	Outer Casing:	**Carbon Steel**
Length:	**813 mm**	Height:	**1136 mm**
Width:	**826 mm**	Diameter:	**n/a**

AUTHORIZED RADIOACTIVE CONTENTS

This package is authorized to contain not more than 370 TBq (10,000 Ci) of cobalt-60 in the form of nickel-plated pellets (1 mm diameter by 1 mm long) or slugs (6.3 mm diameter by 25 mm long) contained within one or more of the following sealed capsules:

MDS Nordion Design Nos.:

C-132, C-133, C-140, C-146, C-151, C-164, C-170, C-174A, C-174B, C-196, C-199, C-200, C-205, C-215, XC-233, XC-325 and TC-239; or

Lawrence Radiation Laboratory Design Nos.:

HCD69893/B and HCD69903/B.

When the activity is greater than 148 TBq (4,000 Ci) of cobalt-60 the F-166 insert assembly must be used.

QUALITY ASSURANCE

Quality assurance for the use, maintenance and inspection of the package shall be in accordance with:

- Canadian Packaging and Transport of Nuclear Substances Regulations
- IAEA Regulations

SHIPMENT

The preparation for shipment of the package shall be in accordance with:

- MDS Nordion Operating Procedure No. IN/PP 0041 (Rev. 5), "Preparation for Shipment of F-144 and

F-144-AC Type B(U) RAM Transport Packages"

- Canadian Packaging and Transport of Nuclear Substances Regulations
- IAEA Regulations

This certificate does not relieve the shipper from any requirement of the government of any country through or into which the package will be transported.

P. Nelson
Designated Officer pursuant to paragraph 37(2)(a)
of the Nuclear Safety and Control Act

Parts List

1. Removable skid
2. ½ in. - 13 UNC x 2 in. long hex bolt (24) SAE Gr 5
3. Transite 12.7 mm (0.5 in.) steel encased
4. Insert - see note 6
5. Cavity: 215.9 mm x 95.3 mm dia. (8.5 in. x 3.75 in. dia.)
6. Plug: Ref 241.3 mm x 152.4 mm dia. (9.5 in. x 6 in dia.)
7. Radiation caution plate (2)
8. Container identification plate (2)
9. Container lift lug (fireshield)
10. Fireshield, Outer: steel frame - bellyband - steel box
11. Fireshield, Inner: cedar - plywood - Kaowool - steel box
12. Plug lift lug
13. Lead shielding, steel encased
14. Draintube (permanently sealed off)
15. 5/8 in. - 18 UNF x 1.5 in. long hex bolt (4) SAE Gr 5
16. Container lift lug (4)
17. Lead wire seal
18. Chain seal
19. Outer shell steel 0.25 in. thick x 520.6 mm (20.5 in.) OD
20. Pipe plug
21. Plug bolts 5/8 in. - 18 UNF x 1.25 in. long hex (4) SAE Gr 8
22. Neoprene gasket
23. Radioactive category label (2): on two opposite sides
24. UN number label (2): one next to each of the two radioactive category labels

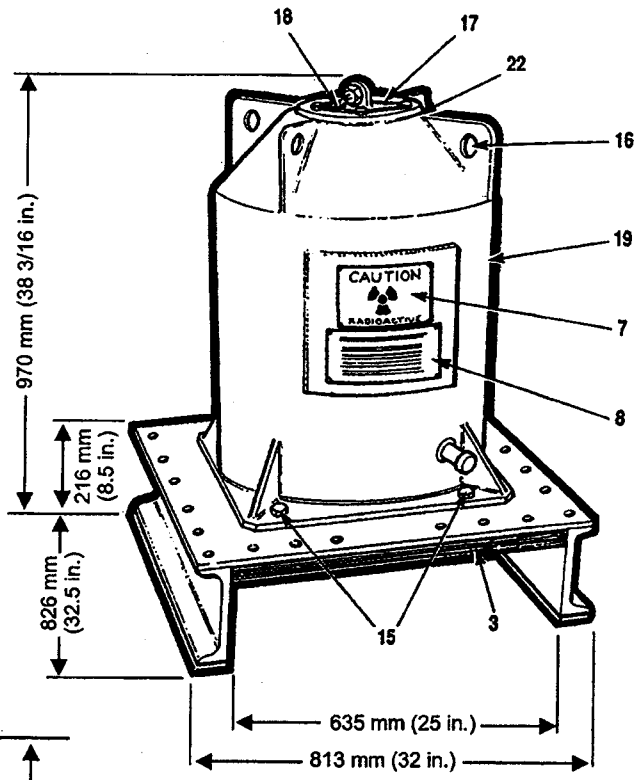

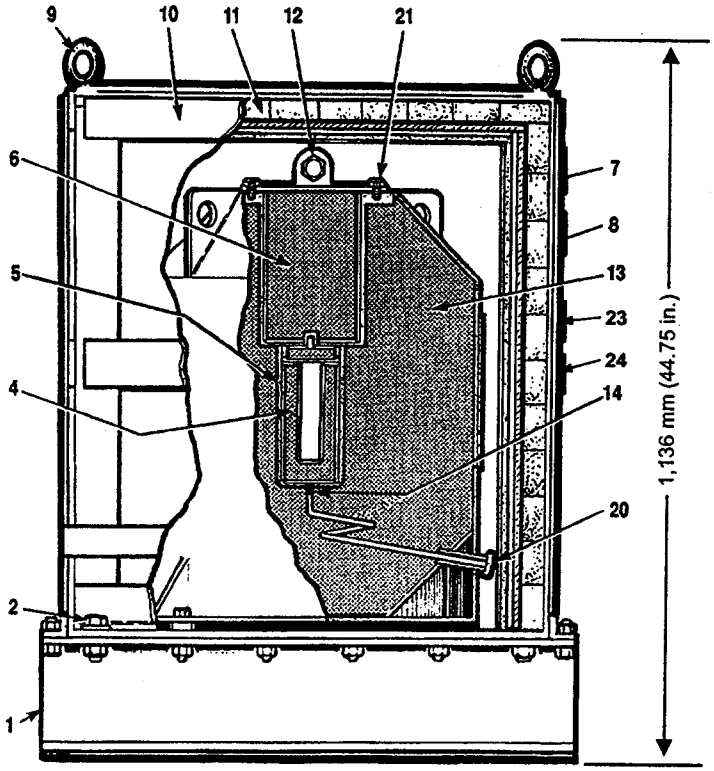

Notes

1. CNSC Certificate No. CDN/2005/B(U)
2. Conforms to IAEA Type B requirements
3. Shielding: 200 mm (7 7/8 in.) lead steel encased;
   with F-166 Insert: 225.4 mm (8 7/8 in.)
   Weight: 15 kg (33 lb.) lead steel encased
4. Gross container weight with insert: 1,682 kg (3,700 lb.)
5. Floor loading based on projected floor area of removable skid: 2,500 kg/m² (512 lb/ft²)
6. Inserts available:
   F-165 - Bucket - Cavity 171.4 mm x 88.9 mm dia. (6.75 in. x 3.5 in. dia.)
   F-222 - Bucket - Cavity 108 mm x 82.5 mm dia. (4.25 in. x 3.25 in. dia.)
   F-166 - Insert - Cavity 158.8 mm x 36.5 mm dia. (6.25 in. x 1.437 in. dia.)
7. Capacity:

F-144 Container	Ci Co-60
Without inserts, or with buckets (F-165, F-222)	4,000
With F-166	10,000

MDS Nordion
447 March Road, P.O. Box 13500
Kanata, Ontario, Canada, K2K 1X8
Tel: (613) 592-2790 · Fax. (613) 592-6937

TITLE

F-144 Transport Packaging

REF. IN/SS 1523 F144 A05890/CP36-B-226		REVISED JUL 03	DCN A1944-D-31B
DATE 9 JUNE 1964		No. F-144	ISSUE 12
DRAWN BW	CHECKED KD	APPROVED MK	SHEET 1 OF 1

THIS DRAWING IS THE PROPERTY OF MDS NORDION AND IS SUBMITTED FOR CONSIDERATION ON THE UNDERSTANDING THAT THERE SHALL BE NO EXPLOITATION OF ANY INFORMATION CONTINUED HEREIN EXCEPT WITH THE SPECIFIC WRITTEN AGREEMENT OF MDS NORDION.

Parts List

1. Removable skid
2. ½ in. - 13 UNC x 2 in. long hex bolt (24) SAE Gr 5
3. Transite 12.7 mm (0.5 in.) steel encased
4. Insert - see note 6
5. Cavity: 215.9 mm x 95.3 mm dia. (8.5 in. x 3.75 in. dia.)
6. Modified plug: Ref 241.3 mm x 152.4 mm dia. (9.5 in. x 6 in dia.)
7. Radiation caution plate (2)
8. Container identification plate (2)
9. Container lift lug (fireshield)
10. Fireshield, outer: steel frame - bellyband - steel box
11. Fireshield, inner: cedar - plywood - Kaowool - steel box
12. Plug lift lug
13. Lead shielding, steel encased
14. Draintube (permanently sealed off)
15. 5/8 in. - 18 UNF x 1.5 in. long hex bolt (4) SAE Gr 5
16. Container lift lug (4)
17. Lead wire seal
18. Chain seal
19. Outer shell steel 0.25 in. thick x 520.6 mm (20.5 in.) OD
20. Pipe plug
21. Plug bolts 5/8 in. - 18 UNF x 1.25 in. long hex (4) SAE Gr 8
22. Neoprene gasket
23. Retaining plate with neoprene gasket
24. Radioactive category label (2): on two opposite sides
25. UN number label (2): one next to each of the two radioactive category labels
26. Radioactivity caution plate (1)

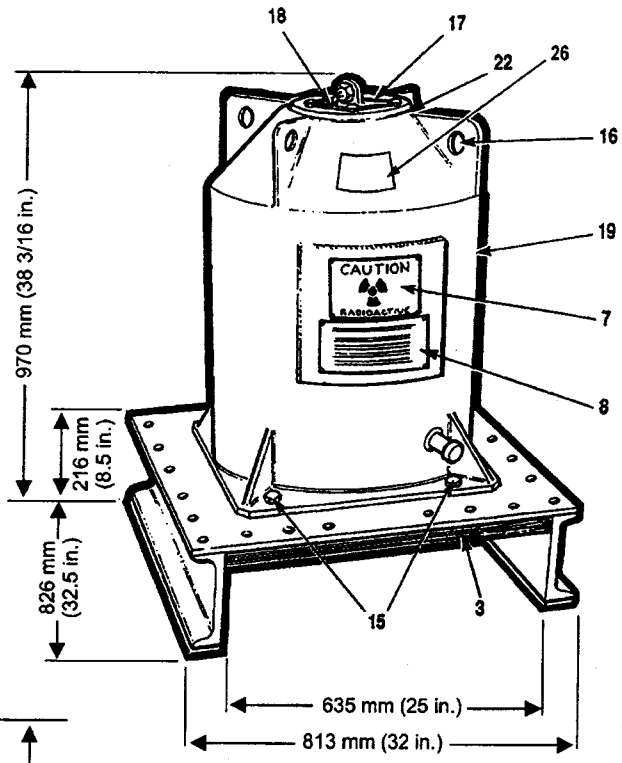

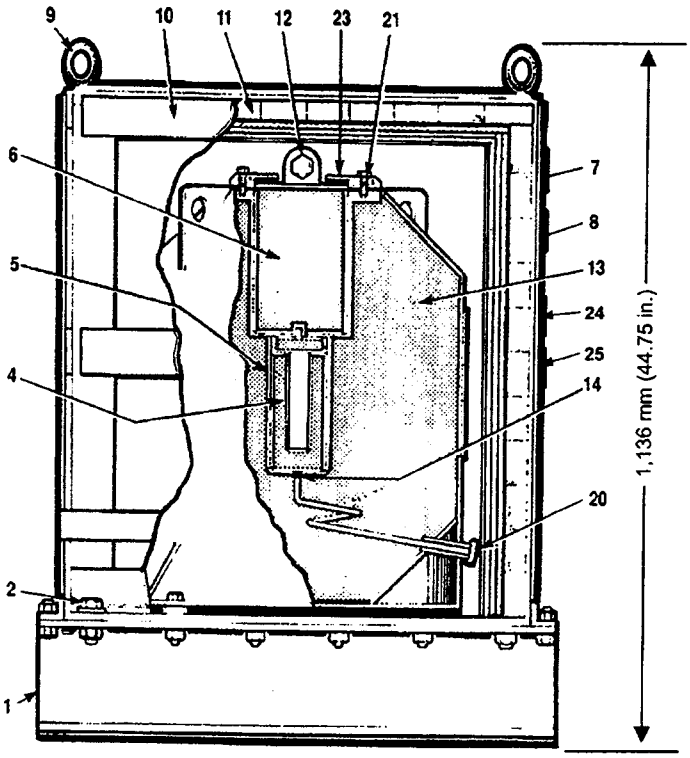

Notes

1. CNSC Certificate No. CDN/2005/B(U)
2. Conforms to IAEA Type B requirements
3. Shielding: 200 mm (7 7/8 in.) lead steel encased; with F-166 Insert: 225.4 mm (8 7/8 in.)
   Weight: 15 kg (33 lb.) lead steel encased
4. Gross container weight with insert: 1,682 kg (3,700 lb.)
5. Floor loading based on projected floor area of removable skid: 2,500 kg/m² (512 lb/ft²)
6. Inserts available:
   F-165 - Bucket - Cavity 171.4 mm x 88.9 mm dia. (6.75 in. x 3.5 in. dia.)
   F-222 - Bucket - Cavity 108 mm x 82.5 mm dia. (4.25 in. x 3.25 in. dia.)
   F-166 - Insert - Cavity 158.8 mm x 36.5 mm dia. (6.25 in. x 1.437 in. dia.)
7. Capacity:

F-144 Container	Ci Co-60
Without inserts, or with buckets (F-165, F-222)	4,000
With F-166	10,000

MDS Nordion
447 March Road, P.O. Box 13500
Kanata, Ontario, Canada, K2K 1X8
Tel: (613) 592-2790 · Fax. (613) 592-6937

TITLE

F-144-AC Transport Packaging

REF. IN/SS 1524 F144AC A05890/A02301		REVISED MAR 05	DC 19717
DATE 9 JUNE 1964		No. F-144-AC	ISSUE 3
DRAWN BW	CHECKED VE	APPROVED MK	SHEET 1 OF 1

THIS DRAWING IS THE PROPERTY OF MDS NORDION AND IS SUBMITTED FOR CONSIDERATION ON THE UNDERSTANDING THAT THERE SHALL BE NO EXPLOITATION OF ANY INFORMATION CONTINUED HEREIN EXCEPT WITH THE SPECIFIC WRITTEN AGREEMENT OF MDS NORDION.