U.S. Department
of Transportation

Pipeline and
Hazardous Materials
Safety Administration

1200 New Jersey Ave. S.E.
Washington, D.C. 20590

COMPETENT AUTHORITY CERTIFICATION
FOR A SPECIAL ARRANGEMENT SHIPMENT OF A TYPE B(U)
RADIOACTIVE MATERIALS PACKAGE DESIGN
CERTIFICATE USA/0760/X-96, REVISION 1

This certifies that the radioactive materials package design described below has been certified by the Competent Authority of the United States as meeting the regulatory requirements for Special Arrangement transportation of packaging for radioactive materials as prescribed in the regulations of the International Atomic Energy Agency[1] and the United States of America[2].

1. Package Identification - MDS Nordion F-168(1996) and F-168-X(1996) Transport Packages, Serial Nos. 53 and up.

2. Packaging Description - as described in Canadian Certificate CDN/2081/B(U)-96, Revision 2 (attached).

   Special arrangement is required because the proposed contents have not previously been authorized for these packages.

3. Authorized Radioactive Contents - Up to 156.2 TBq (4220 Ci) of cobalt-60 encapsulated in Model GEPR-183 GE Sources identified in the application.

4. General Conditions -

   a. Each user of this certificate must have in his possession a copy of this certificate and all documents necessary to properly prepare the package for transportation

   b. Each user of this certificate, other than the original petitioner, shall register his identity in writing to the Office of Hazardous Materials Technology, (PHH-23), Pipeline and Hazardous Materials Administration, U.S. Department of Transportation, Washington D.C. 20590-0001.

   c. This certificate does not relieve any consignor or carrier from compliance with any requirement of the Government of any country through or into which the package is to be transported.

---

[1] "Regulations for the Safe Transport of Radioactive Material, 1996 Edition (Revised), No. TS-R-1 (ST-1, Revised)," published by the International Atomic Energy Agency (IAEA), Vienna, Austria.

[2] Title 49, Code of Federal Regulations, Parts 100 - 199, United States of America.

5. Special Conditions -

a. No more than 48 hours before transfer of the sources from the storage pool to the package, it shall be confirmed that the water passing through the pool filtration system shows no evidence of source leakage.

b. The package shall be prepared for shipment under the direction of MDS Nordion personnel in accordance with MDS Nordion specification IN/PP 0517 F168, "Preparation for Shipment of the F-168 and F-168-X Transport Packagings," (Revision 14).

c. The package shall be adequately braced so as to prevent movement during normal conditions of transport.

d. Transport shall be by exclusive use road vehicle.

e. To the maximum extent possible, transport shall be on interstate highways and during periods of low road usage.

f. The shipment shall be escorted in a separate vehicle by at least one person qualified in radiation protection. Only personnel involved in the shipment shall be in the transport conveyance and the escort vehicle.

g. The transport driver and escort person(s) shall be provided with mobile communication devices for communicating with each other. The person qualified in radiation protection shall be provided with radiation survey instruments, supplies to establish an emergency exclusion area, and written guidance to be followed in an emergency situation.

h. Written notification of the shipment shall be provided to affected state radiation control officials, and to the U. S. Competent Authority, (U. S. Department of Transportation, Pipeline and Hazardous Materials Safety Administration, Radioactive Materials Branch, PHH-23, 1200 New Jersey Ave. SE, Washington, DC 20590) not less than four business days prior to the departure of the shipment.

i. The advance notification to the U. S. Competent Authority shall include verification of the routing and estimated times for departure from point of origin, arrival and departure from the U. S./Canada border, arrival at the destination, and any road vehicle stop longer than 2 hours, as well as the information required by paragraph 559 of the IAEA regulations[1].

j. The U. S. Competent Authority shall be notified on writing of any incidents.

CERTIFICATE USA/0760/X-96, REVISION 1

6. Marking and Labeling - The package shall bear the marking USA/0760/X-96, in addition to other required markings and labeling.

7. Expiration Date - This certificate expires on October 31, 2009.

This certificate is issued in accordance with paragraphs 825 and 826 of the IAEA Regulations, in response to the petition and information dated May 2, 2008 submitted by MDS Nordion, Inc., Kanata, Ontario, Canada, and in consideration of other information on file in this Office.

Certified by:

for Bob Richard
Deputy Associate Administrator for Hazardous Materials Safety

OCT 24 2008
(DATE)

Revision 1 - Issued to correct a typographical error on USA/0760/X-96, Revision 0.

Canadian Certificate No.	Issue Date	Expiry Date	CNSC File
CDN/2081/B(U)-96 (Rev. 2)	**Dec-04-2007**	**Nov-30-2012**	**30-A2-94-3**

Certificate
for
Transport Package Design

The transport package design identified below is certified by the Canadian Nuclear Safety Commission pursuant to paragraph 21(1)(h) of the *Nuclear Safety and Control Act* and Section 7 of the *Packaging and Transport of Nuclear Substances Regulations*, and to the 1996 Edition (Revised) of the IAEA *Regulations for the Safe Transport of Radioactive Material.*

REGISTRATION OF USE OF PACKAGES

All users of this authorization shall register their identity in writing with the Canadian Nuclear Safety Commission prior to the first use of this authorization and shall certify that they possess the instructions necessary for preparation of the package for shipment.

PACKAGE IDENTIFICATION

Designer: **MDS Nordion**
Make/Model: **F-168 (1996) and F-168-X (1996), Serial Nos. 53 and up**
Mode of Transport: **Air, Sea, Road, Rail**

IDENTIFICATION MARK

The package shall bear the competent authority identification mark **"CDN/2081/B(U) - 96"**.

PACKAGE DESCRIPTION

The F-168 packaging, as shown on MDS Nordion Drawing Nos. F116801-001, (Rev. R) and F116801-020, (Rev. H) and the F-168-X packaging, as shown on MDS Nordion Drawing Nos. F116801-100 (Rev. F) and F116801-101 (Rev. J), consists of a 266 mm lead-filled shielding steel encased right cylinder with external fins, insulated steel flame shields on the top and side, steel covered insulation on the bottom and an optional heat screen on the top. The cavity is equipped with a drain and vent line for pool loading. The drain and vent line of the F-168-X package are sealed with a stainless steel plug. The package is permanently mounted on a structural steel base. The containment system is the source outer encapsulation. An illustration of the package is shown on attached Drawing No. F-168(-X) (1996) (Issue 2).

The configuration of the F-168 and F-168-X is as follows:

Shape:	**Cylinder**	Shielding:	**Lead**
Mass:	**5445 kg**	Outer Casing:	**Steel**
Length:	**n/a**	Height:	**1659 mm**
Width:	**n/a**	Diameter:	**1013 mm**

Canadian Certificate No.	Issue Date	Expiry Date	CNSC File
CDN/2081/B(U)-96 (Rev. 2)	**Dec-04-2007**	**Nov-30-2012**	**30-A2-94-3**

AUTHORIZED RADIOACTIVE CONTENTS

See Appendix A

QUALITY ASSURANCE

Quality assurance for the design, manufacture, testing, documentation, use, maintenance and inspection of the package shall be in accordance with:

- MDS Nordion Specification No. IN/DS 1811 F-168 (2), "Design, Manufacturing and Operating Specification for F-168 and F-168-X Transport Packages"
- MDS Nordion Specification No. IN/QA 0224 Z000 (7)*, "Radioactive Material Transport Package Quality Plan"
- MDS Nordion Specification No. IN/QA 0562 A000 (4)*, "Sealed Source Quality Plan"
- Canadian Packaging and Transport of Nuclear Substances Regulations
- IAEA Regulations
- * or latest current revision

SHIPMENT

The preparation for shipment of the package shall be in accordance with:

- MDS Nordion Specification No. IN/DS 1811 F-168 (2), "Design, Manufacturing and Operating Specification for F-168 and F-168-X Transport Packages"
- Canadian Packaging and Transport of Nuclear Substances Regulations
- IAEA Regulations

Canadian Certificate No.	Issue Date	Expiry Date	CNSC File
CDN/2081/B(U)-96 (Rev. 2)	**Dec-04-2007**	**Nov-30-2012**	**30-A2-94-3**

This certificate does not relieve the shipper from any requirement of the government of any country through or into which the package will be transported.

A. Régimbald
Designated Officer pursuant to paragraph 37(2)(a)
of the Nuclear Safety and Control Act

Appendix A

The package is authorized to contain not more than:

Radionuclide	Maximum Quantity (TBq)	Form	Maximum Decay Heat (W)	Sealed Capsule
Cobalt-60	7,400	Metal pellets, metal wafer, metal slug, stainless steel clad wire, aluminium clad cobalt slugs	3,200	C-132, C-133, C-146, C-151, C-177, C-185, C-188, C-189, C-190, C-198, C-199, C-200, C-238, TC-239, C-246, C-247, C-248, C-252, C-306, C-335, XC-318, XC-325, C-348, C-442, AC-191*, AC-195*, AC-345*, AC-339*, welded stainless steel capsules that meet the requirements of the International Organization of Standardization International Standard 2919 (First Edition) under classification number E53424, or special form sources similar to source models listed above, all with the capsules retained within a holder that distribute them throughout the cavity volume.
Cobalt-60	2,590	Metal slug aluminium sheathed	1,070	C-350 or special form sources similar to the source models listed above, all with the capsules retained within a holder that distribute them throughout the cavity volume.
Cobalt-60	5,550	Metal slug nickel plated	2,320	C-351 or special form sources similar to the source models listed above, all with the capsules retained within a holder that distribute them throughout the cavity volume.
Antimony-124	1,850	Cast metal	660	C-232 or special form sources similar to the source models listed above, all with the capsules retained within a holder that distribute them throughout the cavity volume.
Cesium-137	3,700	Cesium chloride	522	Special form sources with double encapsulation in stainless steel, all with the capsules retained within a holder that distribute them throughout the cavity volume.

* Transported in F-168-X only

Combination loading of the above materials is authorized provided that the sum of the ratios of loaded activity to authorized activity, for all material loaded, does not exceed 1.0.

Parts List

1. Upper Fireshield
2. Optional Heat Screen
3. Retaining Brackets (4) for Upper Fireshield
4. Radiation Caution Plate
5. MDS Nordion Identification Plate
6. Fireshield (Removable) - O.D. 1013 mm (39.88 in.), Laminated Construction: 2 x 6.3 mm (0.25 in.) Steel + 25.4 mm (1 in.) Kaowool
7. Warning Plate "CAUTION - HEAT EMITTER - DO NOT STORE IN INSULATED OR REFRIGERATION CONTAINER OR INSULATED SPACE"
8. Ceramic insulation - Steel Encased
9. Vermiculite Packing
10. Gasket (Neoprene)
11. 7/8 - 9 Hex Bolt (8)
12. Wire Seal
13. 3/8 in. NPT Pipe Plug (2)
14. Plug Lift Lug
15. Vent Tube
16. Plug
17. Cavity: 479 mm x 162 mm Dia. (18.87 in. x 6.37 in. Dia.)
18. Radioactive Contents and Carrier
19. Drain Tube (sealed at cavity for F-168-X)
20. 3/4 -10 Hex Bolt for Skid (4)
21. Optional Removable Shipping Skid, 54 in. (1370 mm) square
22. Nipple and Drainline Cap (sealed with standard pipe plug for F-168-X)
23. Shield Plate with 3/8 -16 Screws (3)
24. Category Label (2)
25. Eye Bolt
26. Eye Bolt Cover
27. UN Number Label (2)

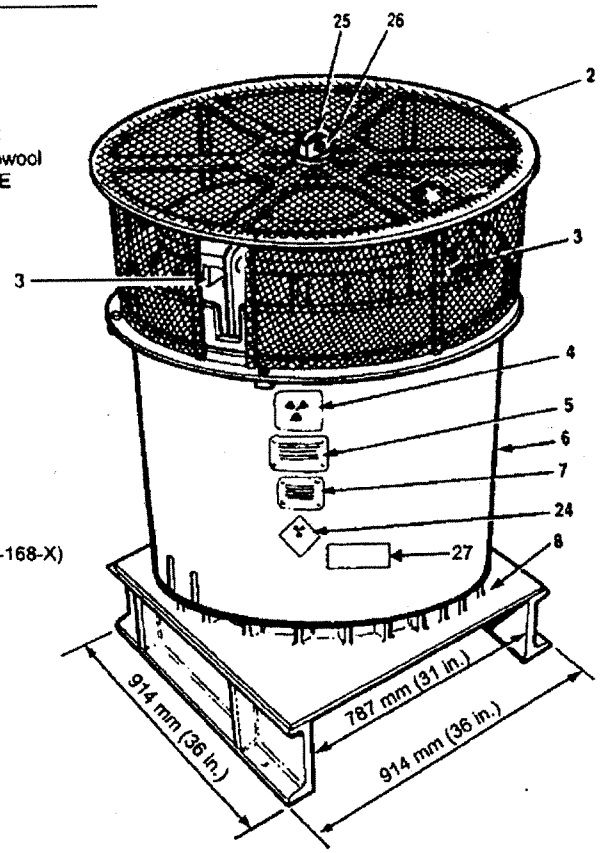

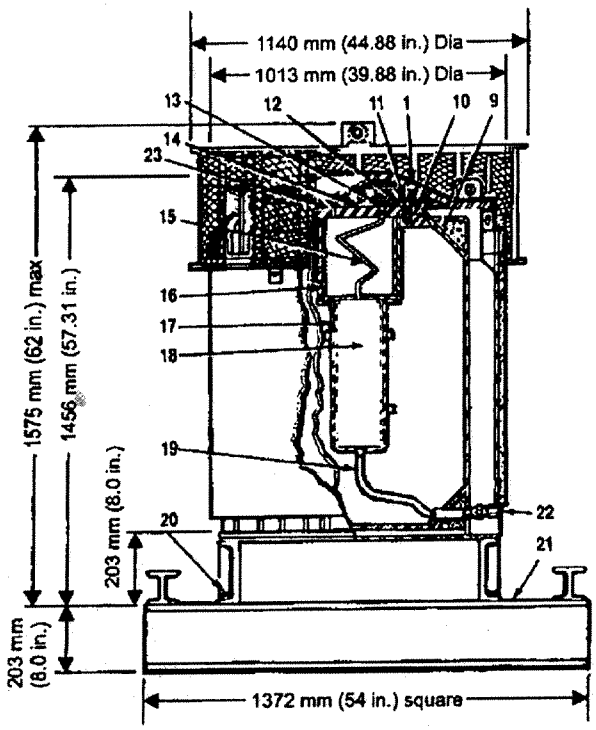

Notes

1. CNSC Certificate CDN/2081/B(U)-96
2. Meets IAEA Type B(U) Requirements
3. Steel encased lead shielding: 266 mm (10.5 in.)
4. Gross Weight: 5445 kg (12,000 lb.)
5. Plug Weight: 177 kg (390 lb.)
6. Projected Floor Loading: 2900 kg/m^2 (593 lb/ft^2)
7. Radionuclides carried:
   1. Cobalt-60
   2. Antimony-124
   3. Cesium-137
8. Labels may be positioned as illustrated, or 45° to that shown

MDS Nordion

447 March Road, P.O. Box 13500
Kanata, Ontario, Canada, K2K 1X8
Tel: (613) 592-2790 · Fax. (613) 592-6937

THIS DRAWING IS THE PROPERTY OF MDS NORDION AND IS SUBMITTED FOR CONSIDERATION ON THE UNDERSTANDING THAT THERE SHALL BE NO EXPLOITATION OF ANY INFORMATION CONTINUED HEREIN EXCEPT WITH THE SPECIFIC WRITTEN AGREEMENT OF MDS NORDION.

TITLE

F-168 and F-168-X Transport Package (To IAEA 1996 Transport Regulations)

REF. IN/SS 1812 F168X F116801-001/F116801-020		REVISED Nov 02	DCN A2119-D-08A
DATE Nov 2001		No. F-168(-X) (1996)	ISSUE 2
DRAWN BW	CHECKED JR	APPROVED MK	SHEET 1 OF 2

U.S. Department
of Transportation

**Pipeline and
Hazardous Materials
Safety Administration**

**East Building, PHH-23
1200 New Jersey Avenue SE
Washington, D.C. 20590**

CERTIFICATE NUMBER: USA/0760/B(U)-96, Revision 1

ORIGINAL REGISTRANT(S):

Mr. Marc-Andre Charette
Manager, Regulatory Affairs
MDS Nordion
447 March Road
Ottawa, K2K 1X8
CANADA

Luc Desgagne
Senior Licensing Coordinator
MDS Nordion
447 March Road
Ottawa, Ontario K2K 1X8
CANADA

Mr. Marc-Andre Charette
Manager, Regulatory Affairs
MDS Nordion
447 March Road
Ottawa, K2K 1XB
CANADA

Ms. Jackie Kavanagh
Manager, Facility & Transportation Licensing
MDS Nordion
MDS Nordion
447 March Road
Ottawa, K2K 1X8
Canada