U.S. Department
of Transportation
**Pipeline and
Hazardous Materials
Safety Administration**

**400 Seventh Street, S.W.
Washington, D.C. 20590**

**IAEA CERTIFICATE OF COMPETENT AUTHORITY
SPECIAL FORM RADIOACTIVE MATERIALS
CERTIFICATE NUMBER USA/0715/S, REVISION 0**

This certifies that the source described has been demonstrated to meet the regulatory requirements for special form radioactive material as prescribed in the regulations of the International Atomic Energy Agency[1] and the United States of America[2] for the transport of radioactive materials.

1. Source Identification - AEA Technology QSA, Inc. Model X101 (Manufactured on or after January 4, 1979).

2. Source Description - Cylindrical single encapsulation made of stainless steel and tungsten inert gas or laser seal welded. Approximate outer dimensions are 3.2 mm (0.13 in.) in diameter and 10.4 mm (0.41 in.) in length. Minimum wall thickness is 0.15 mm (0.006 in.). Construction shall be in accordance with attached AEA Technology QSA, Inc. Drawing No. RBA10818, Rev. A.

3. Radioactive Contents - No more than 740.0 MBq (20.0 mCi) of either Americium-241 or Californium-252. The Am-241 is in the form of an oxide incorporated into a ceramic enamel. The Cf-252 is in the form of a solid metal or a ceramic.

4. Quality Assurance - Records of Quality Assurance activities required by Paragraph 310 of the IAEA regulations[1] shall be maintained and made available to the authorized officials for at least three years after the last shipment authorized by this certificate. Consignors and consignees in the United States exporting or importing shipments under this certificate shall satisfy the requirements of Subpart H of 10 CFR 71.

5. Expiration Date - This certificate expires September 30, 2010.

---

1 "Regulations for the Safe Transport of Radioactive Material, 1996 Edition (Revised), No. TS-R-1 (ST-1, Revised)," published by the International Atomic Energy Agency (IAEA), Vienna, Austria.

2 Title 49, Code of Federal Regulations, Parts 100 - 199, United States of America.

CERTIFICATE USA/0715/S, REVISION 0

This certificate is issued in accordance with paragraph 804 of the IAEA Regulations and Section 173.476 of Title 49 of the Code of Federal Regulations, in response to the petition and information dated July 27, 2005 and September 26, 2005 submitted by AEA Technology QSA, Inc., Burlington, MA, and in consideration of other information on file in this Office.

Certified by:

Robert A. McGuire
Associate Administrator for
Hazardous Materials Safety

OCT - 6 2005
(DATE)

Revision 0 - Original issue.

Item No	Description	No off
1	BODY STAIN. STL.	1
2	LID STAIN. STL.	1
3	CERAMIC FIBRE	A/R
4	ACTIVE MATERIAL	A/R

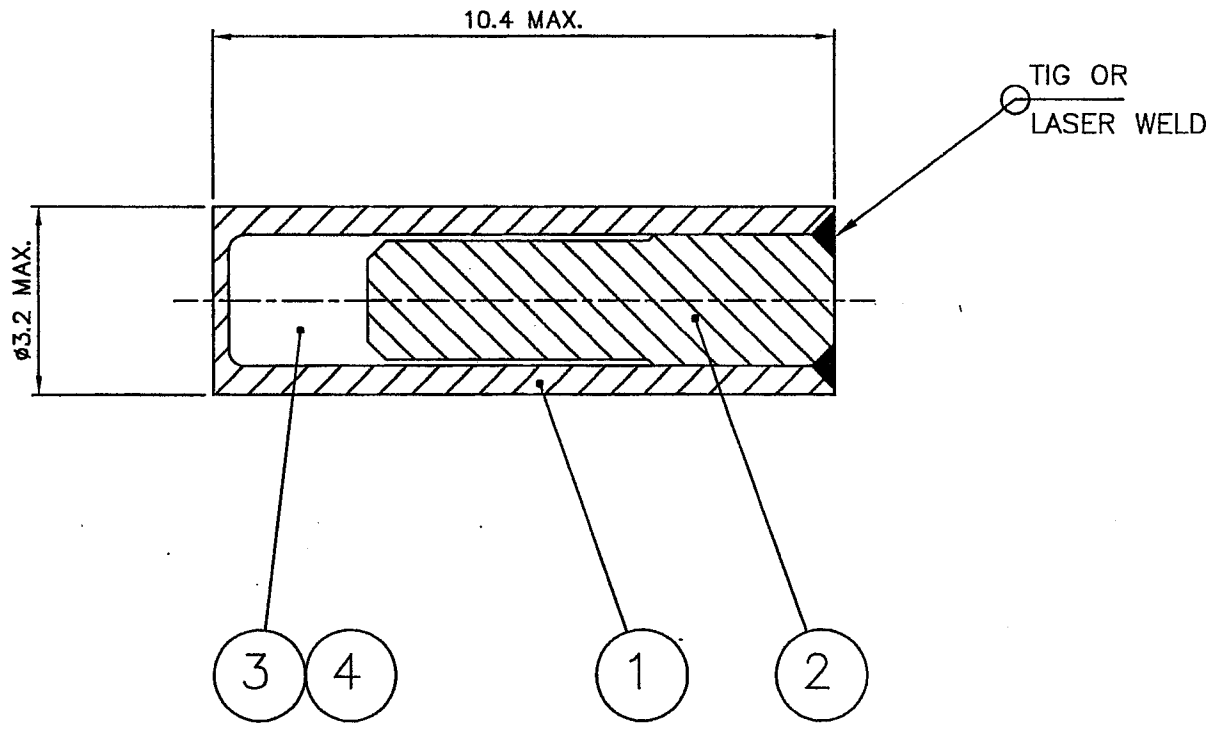

APPROVALS	
	7/25/05
	25 Jul 05

DIMENSIONS IN MILLIMETERES
UNLESS OTHERWISE STATED TOLERANCES:

X ±0.5
X.X ±0.1
X.XX ±0.05
ANGULAR ±5°

INTERNAL N7
EXTERNAL N8

AEA TECHNOLOGY QSA
40 NORTH AVE, BURLINGTON, MA 01803

DESCRIPTIVE DRAWING

TITLE X101 CAPSULE ASSEMBLY

SIZE A | DWG. NO. RBA10818 | REV A

SCALE: NONE | SHEET 1 OF 1

ERF # 1106