U.S. Department
of Transportation

**Pipeline and
Hazardous Materials
Safety Administration**

**East Building, PHH-23
1200 New Jersey Avenue SE
Washington, D.C. 20590**

**COMPETENT AUTHORITY CERTIFICATION
FOR A TYPE B(U)
RADIOACTIVE MATERIALS PACKAGE DESIGN
CERTIFICATE USA/0697/B(U)-96, REVISION 3**

**REVALIDATION OF CANADIAN COMPETENT AUTHORITY
CERTIFICATE CDN/2078/B(U)-96**

This certifies that the radioactive material package design described is hereby approved for use within the United States for import and export shipments only. Shipments must be made in accordance with the applicable regulations of the International Atomic Energy Agency[1] and the United States of America[2].

1. Package Identification - MDS Nordion F-458/F-245, F-458/F-247, F-458/F-251, F-458/F-251 MK2, F-458/F-318 and F-458/F-448 Transport Packages.

2. Package Description and Authorized Radioactive Contents - as described in Canada Certificate of Competent Authority CDN/2078/B(U)-96, 3 (attached).

3. General Conditions -

   a. Each user of this certificate must have in his possession a copy of this certificate and all documents necessary to properly prepare the package for transportation. The user shall prepare the package for shipment in accordance with the documentation and applicable regulations.

   b. Each user of this certificate, other than the original petitioner, shall register his identity in writing to the Office of Hazardous Materials Technology, (PHH-23), Pipeline and Hazardous Materials Safety Administration, U.S. Department of Transportation, Washington D.C. 20590-0001.

   c. This certificate does not relieve any consignor or carrier from compliance with any requirement of the Government of any country through or into which the package is to be transported.

---

[1] "Regulations for the Safe Transport of Radioactive Material, 1996 Edition (Revised), No. TS-R-1 (ST-1, Revised)," published by the International Atomic Energy Agency(IAEA), Vienna, Austria.

[2] Title 49, Code of Federal Regulations, Parts 100-199, United States of America.

d. Records of Quality Assurance activities required by Paragraph 310 of the IAEA regulations[1] shall be maintained and made available to the authorized officials for at least three years after the last shipment authorized by this certificate. Consignors in the United States exporting shipments under this certificate shall satisfy the applicable requirements of Subpart H of 10 CFR 71.

4. Special Conditions -

a. For shipments of radioactive material not in special form:

(a) The radioactive materail must be packaged in a leakproof insert.

(b) The maximum decay heat is 6.1 watts per package.

(c) The leakproof inset O-ring must be tested to demonstrate a leakage rate not more than 1E-7 ref-cm3/s prior to use. This test may be performed prior to loading the contents in the leakproof insert.

(d) Radioactive iodine is limited to a quantity of 30 A2 per package.

(e) After loading and prior to shipment of Sr-90 or Mo-99, the seals of the leakproof insert must show no leakage when tested to a sensitivity of at least 1E-3 ref-cm3/s.

b. The shipper must provide the consignee special instructions for safely opening the package. The instructions must give special consideration to any byproducts generated by the radiolysis of water.

5. Marking and Labeling - The package shall bear the marking USA/0697/B(U)-96 in addition to other required markings and labeling.

6. Expiration Date - This certificate expires on October 31, 2011.

CERTIFICATE USA/0697/B(U)-96, REVISION 3

This certificate is issued in accordance with paragraph 808 of the IAEA Regulations and Section 173.473 of Title 49 of the Code of Federal Regulations, in response to the December 02, 2008 petition by MDS Nordion, Ottawa, Ontario, and in consideration of other information on file in this Office.

Certified By:

Jan 16 2009

Robert A. Richard (DATE)
Deputy Associate Administrator for Hazardous Materials Safety

Revision 3 - Issued to revalidate Canadian Certificate of Competent Authority CDN/2078/B(U)-96, Rev. 3, with the indicated conditions.

Canadian Certificate No.	Issue Date	Expiry Date	CNSC File
CDN/2078/B(U)-96 (Rev. 3)	**Nov-24-2008**	**Oct-31-2011**	**30-A2-243-0**

Certificate
for
Transport Package Design

The transport package design identified below is certified by the Canadian Nuclear Safety Commission pursuant to paragraph 21(1)(h) of the *Nuclear Safety and Control Act* and Section 7 of the *Packaging and Transport of Nuclear Substances Regulations*, and to the 1996 Edition (Revised) of the IAEA *Regulations for the Safe Transport of Radioactive Material*.

REGISTRATION OF USE OF PACKAGES

All users of this authorization shall register their identity in writing with the Canadian Nuclear Safety Commission prior to the first use of this authorization and shall certify that they possess the instructions necessary for preparation of the package for shipment.

PACKAGE IDENTIFICATION

Designer: **MDS Nordion**
Make/Model: **F-458/F-245; F-247; F-251; F-251 MK2; F-318 and F-448**
Mode of Transport: **Air, Sea, Road, Rail**

IDENTIFICATION MARK

The package shall bear the competent authority identification mark **"CDN/2078/B(U) - 96"**.

PACKAGE DESCRIPTION

The packaging consists of a containment system, a shielding vessel and an outer container.

The containment system consist of a special form capsule, a C-133 welded sealed capsule within an F-336 tungsten alloy insert or an F-248, F-242, F-256 or F-320 leak proof insert. The leak proof insert consists of a stainless steel body and a lid that is screwed into place and sealed with an O-ring.

The shielding consists of an F-251, F-251 MK2, F-318, F-245 or F-247 vessel made of depleted uranium encased in stainless steel or an F-448 vessel made of lead encased in stainless steel.

The outer container consists of a double-wall cylindrical stainless steel drum closed by a lid and six M10 stainless steel bolts. The void between the two walls is filled with polyurethane foam for thermal and impact protection. Two vent holes, closed by a plastic pipe thread plug are located on the body of the drum and two are located on the lid.

Canadian Certificate No.	Issue Date	Expiry Date	CNSC File
CDN/2078/B(U)-96 (Rev. 3)	**Nov-24-2008**	**Oct-31-2011**	**30-A2-243-0**

The various packaging models are further shown on MDS Nordion Drawings Nos. F-458/F245: F624501-002 (Issue D); F 458/F247: F624701-002 (Issue D); F-458/F251 et F251 MK2: F625101-002 (Issue E); F-458/F318: F631801-002 (Issue D) et F-458/F448: F644801-002 (Issue D).

An illustration of the packages are shown in the attached MDS Nordion Drawing No. F-458, (Issue 8).

The total mass of each package is as follows:

F-458/F-251 and F-458/F-251 MKII: 167 kg
F-458-F-318: 164 kg
F-458/F-245: 153 kg
F-458/F-247: 125 kg
F-458/F-448: 138 kg

The configuration of the F-458 packaging is as follows:

Shape: **Cylinder**
Mass: **n/a**
Length: **n/a**
Width: **n/a**

Shielding: **Lead or Depleted Uranium**
Outer Casing: **Stainless Steel**
Height: **494 mm**
Diameter: **400 mm**

AUTHORIZED RADIOACTIVE CONTENTS

The radioactive contents for the various configurations of the F-458 Transport Packages are listed in Appendix A attached.

QUALITY ASSURANCE

Quality assurance for the design, manufacture, testing, documentation, use, maintenance and inspection of the package shall be in accordance with:

- MDS Nordion Document No. IN/QA 0224 Z000 (7)* "Radioactive Material Transport Package Quality Plan"
- MDS Nordion Document No. IN/QA 0562 A000 (4)* "Sealed Source Quality Plan"
- MDS Nordion Document No. IS/DS 1789 F458 (10) "Design, Manufacturing and Operating Specification for the F-458 Family of Transport Package"
- Canadian Packaging and Transport of Nuclear Substances Regulations
- IAEA Regulations

Canadian Certificate No.	Issue Date	Expiry Date	CNSC File
CDN/2078/B(U)-96 (Rev. 3)	**Nov-24-2008**	**Oct-31-2011**	**30-A2-243-0**

- * or latest current revision

SHIPMENT

The preparation for shipment of the package shall be in accordance with:

- MDS Nordion Document No. IS/DS 1789 F458 (10) "Design, Manufacturing and Operating Specification for the F-458 Family of Transport Package"
- Canadian Packaging and Transport of Nuclear Substances Regulations
- IAEA Regulations

This certificate does not relieve the shipper from any requirement of the government of any country through or into which the package will be transported.

S. Faille
Designated Officer pursuant to paragraph 37(2)(a)
of the Nuclear Safety and Control Act

Canada

Appendix A

The radioactive contents for the various configurations of the F-458 Transport Packages are listed in the following tables:

Package Configurations and Authorized Radioactive Contents for F-458/F-251 and F-458/F-318

Isotope	Package Configuration			Chemical and Physical Form
	F-251 or F-318 with F-248 insert	F-251 or F-318 with F-320 insert	F-251 or F-318 with F-368 insert	
I-131	20 TBq (540 Ci)	20 TBq (540 Ci)	20 TBq (540 Ci)	Solid
I-131	7.4 TBq (200 Ci)	13 TBq (351 Ci)	--	Aqueous NaOH solution or aqueous NaOH with up to 0.02 M Na_2SO_4
Ir-192	--	--	300 TBq (8100 Ci)	Special Form capsule
Mo-99/ Tc-99m	37 TBq (1000 Ci)	55.5 TBq (1500 Ci)	--	Solid or aqueous NaOH solution or aqueous NaOH with up to 1 M NH_4NO_3 or up to 0.4% NaOCl
Sr-90/ Y-90	18.5 TBq (500 Ci)	18.5 TBq (500 Ci)	--	Solid
Sr-90/ Y-90	6.4 TBq (173 Ci)	11.1 TBq (300 Ci)	--	Liquid in up to 1 N HCl
Y-90	18.5 TBq (500 Ci)	18.5 TBq (500 Ci)	--	Solid
Y-90	6.4 TBq (173 Ci)	11.1 TBq (300 Ci)	--	Liquid in 0.04 N HCl

Package Configurations and Authorized Radioactive Contents for F-458/F-245 and F-458/F-247

Isotope	Package Configuration			Chemical and Physical Form
	F-245 with F-248 insert	F-247 with F-242 insert	F-245 with F-336 insert	
Co-60	--	--	275 GBq (7.4 Ci)	Solid
I-131	7500 GBq (202 Ci)	3300 GBq (89 Ci)	--	Solid or aqueous NaOH solution or aqueous NaOH with up to 0.2 M Na_2S0_4
Ir-192	--	37 TBq (1000 Ci)	--	Solid pellets
Ir-192	--	--	300 TBq (8100 Ci)	Solid pellets in a C-133 capsule
Ir-192	--	110 TBq (2970 Ci)	300 TBq (8100 Ci)	Special form capsule
Mo-99/ Tc-99m	37 TBq (1000 Ci)	25 TBq (676 Ci)	--	Solid or aqueous NaOH solution or aqueous NaOH solution with up to 1 M NH_4NO_3 or up to 0.4% NaOCl

Package Configurations and Authorized Radioactive Contents for F-458/F-448 in F-256 Leakproof Insert

Isotope	Package Configuration		
	F-448/F-256	F-448/F-256/F-389	Chemical and Physical Form
I-125	7,400 GBq (200 Ci)	7,400 GBq (200 Ci)	Solid or Aqueous NaOH solution
I-131	5,180 GBq (140 Ci)	10,000 GBq (270 Ci)	Solid or Aqueous NaOH solution or Aqueous NaOH solution with 0.02 M Na_2SO_4
Mo-99/ Tc-99m	555 GBq (15 Ci)	1,110 GBq (30 Ci)	Solid or Aqueous NaOH solution or Aqueous NaOH with 1 M NH_4NO_3 or up to 0.4% NaOCl
Y-90	16,000 GBq (432 Ci)	--	Solid or Liquid in 0.04 N HCl
Sr-90/Y-90	16,000 GBq (432 Ci)	--	Solid or Liquid in 1 N HCl

Package Configurations and Authorized Radioactive Contents for F-458/F-448 in Special Form Sealed Sources

Isotope	Package Configuration			
	F-448	F-448/F-174	F-448-F/286	F-448/F-382
Co-60	4.0 GBq (0.1 Ci)	15.0 GBq (0.4 Ci)	4.0 GBq (0.1 Ci)	15.0 GBq (0.4 Ci)
Ir-192	2,405 GBq (65 Ci)	9,250 GBq (250 Ci)	4,800 GBq (130 Ci)	33,300 GBq (900 Ci)
Sb-124	7.4 GBq (0.2 Ci)	11.1 GBq (0.3 Ci)	7.4 GBq (0.2 Ci)	44.4 GBq (1.2 Ci)
Y-90	18,000 GBq (486 Ci)	18,000 GBq (486 Ci)	18,000 GBq (486 Ci)	18,000 GBq (486 Ci)
Sr-90/Y-90	18,000 GBq (486 Ci)	18,000 GBq (486 Ci)	18,000 GBq (486 Ci)	18,000 GBq (486 Ci)

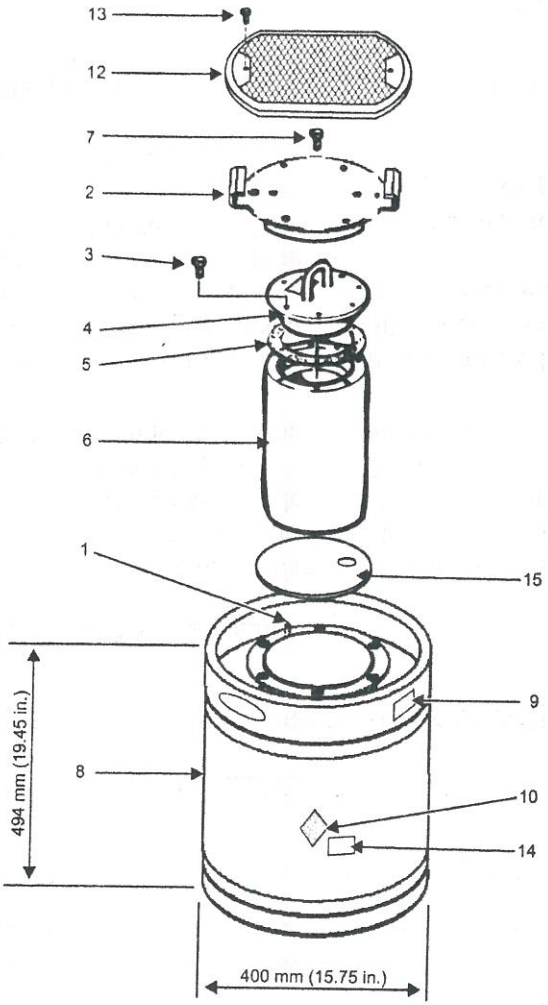

Parts List

1. Wire seal on guide pin
2. Lid
3. 3/8 - 16UNC hex head cap screws, SAE J429, Gr. 5, (F-245, F-247 and F-251 – 4 pcs., F-448, F-251 MKII and F-318 – 6 pcs.)
4. Shielded plug
5. Neoprene gasket
6. Shielding vessel
7. Stainless steel bolt M10 x 30 mm long (6)
8. Stainless steel cylinder
9. Shipping container identification and radiation caution label (2)
10. Radioactive Category Labels (2): on two opposite sides
11. Leakproof insert and radioactive contents
12. Heat screen. See Note 5.
13. Stainless steel bolt M8 x 16 mm long (2)
14. UN Number Labels (2): one next to each of the radioactive category label
15. Bottom spacer disk (as required for F-245, F-247, F-448)

Notes

1. Meets IAEA Type B(U) requirements
2. CNSC Certificate CDN/2078/B(U)-96
3. Prepare for shipment in accordance with IS/PP 1693 F458
4. Supplemental shielding inserts may be used in some configurations
5. Supplemental heat screen to be used for shipments of Ir-192 in excess of 150 TBq

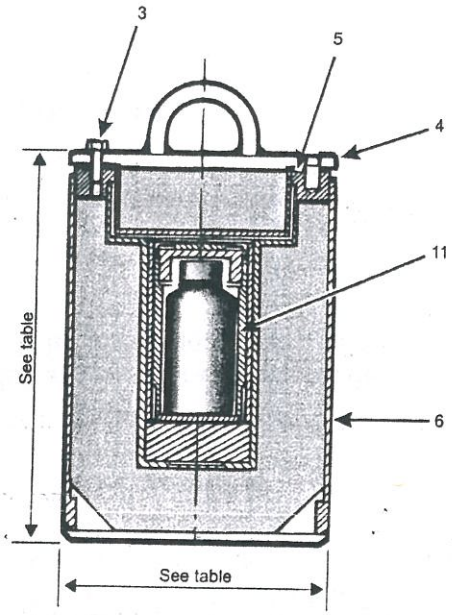

CROSS SECTION THROUGH ITEM 6

Shielding Vessels & Inserts

Package Model Type	Package Total Weight (kg)	Shielding Vessel Diameter (mm)	Shielding Vessel Height (mm)	Leakproof Insert Type	Shielding Insert Type
F-458/F-251 F-458/F-251MKII	167	184	274	F-320 F-248	F-368
F-458/F-318	164	171	268	F-320 F-248	F-368
F-458/F-245	153	181	245	F-248	F-336
F-458/F-247	125	165	218	F-242	
F-458/F-448	138	184	256	F-256	F-174 F-286 F-382 F-389

MDS Nordion
447 March Road
Ottawa, Ontario
Canada, K2K 1X8
Tel: (613) 592-2790
Fax: (613) 592-6937

TITLE

02 MAY 2008

F-458 Transport Packaging

REF. IS/SS 1699 F458 F545801-001		REVISED APR 08	CF 2161
DATE Nov 00		No. F-458	ISSUE 8
DRAWN BW	CHECKED SM	APPROVED JR	SHEET 1 OF 1

THIS DRAWING IS THE PROPERTY OF MDS NORDION AND IS SUBMITTED FOR CONSIDERATION ON THE UNDERSTANDING THAT THERE SHALL BE NO EXPLOITATION OF ANY INFORMATION CONTAINED HEREIN EXCEPT WITH THE SPECIFIC WRITTEN AGREEMENT OF MDS NORDION.

U.S. Department
of Transportation

**Pipeline and
Hazardous Materials
Safety Administration**

**East Building, PHH-23
1200 New Jersey Avenue SE
Washington, D.C. 20590**

CERTIFICATE NUMBER: USA/0697/B(U)-96, Revision 3

ORIGINAL REGISTRANT(S):

Mr. Marc-Andre Charette
Manager, Regulatory Affairs
MDS Nordion
447 March Road
Ottawa, K2K 1X8
CANADA

Luc Desgagne
Senior Licensing Coordinator
MDS Nordion
447 March Road
Ottawa, Ontario K2K 1X8
CANADA

Mr. Marc-Andre Charette
Manager, Regulatory Affairs
MDS Nordion
447 March Road
Ottawa, K2K 1XB
CANADA

Ms. Jackie Kavanagh
Manager, Facility & Transportation Licensing
MDS Nordion
MDS Nordion
447 March Road
Ottawa, K2K 1X8
Canada