U.S. Department of Transportation
Research and Special Programs Administration

400 Seventh St., S.W.
Washington, D.C. 20590

IAEA CERTIFICATE OF COMPETENT AUTHORITY
SPECIAL FORM RADIOACTIVE MATERIALS
CERTIFICATE NUMBER USA/0694/S, REVISION 0

This certifies that the source described has been demonstrated to meet the regulatory requirements for special form radioactive material as prescribed in the regulations of the International Atomic Energy Agency[1] and the United States of America[2] for the transport of radioactive materials.

1. Source Identification - AEA Technology QSA, Inc. Model XN46 Capsule in a Model X0876 Holder (Manufactured on or after November 24, 1994).

2. Source Description - The Model XN46 is a cylindrical single encapsulation made of stainless steel and seal welded. Approximate exterior dimensions are 3.6 mm (0.14 in.) in diameter and 83.8 mm (3.3 in.) in length. Minimum wall thickness is 0.15 mm (0.006 in.). The Model XN46 is retained in the Model X0876 slotted cylindrical stainless steel source holder by means of a retaining block at each end of the XN46 that is fastened by welded in-place screws. Approximate exterior dimensions of the Model X0876 with extensions are 12.7 mm (0.5 in.) in diameter and 177.8 mm (7.0 in.) in length. Construction shall be in accordance with attached AEA Technology QSA, Inc. Drawing Nos. RBA63137, Rev. B and RBA62541, Rev A.

3. Radioactive Contents - No more than 37.0 GBq (1.0 Ci) of Americium-241. The Am-241 is in the form of an oxide incorporated into a ceramic matrix.

4. Quality Assurance - Records of Quality Assurance activities required by Paragraph 310 of the IAEA regulations[1] shall be maintained and made available to the authorized officials for at least three years after the last shipment authorized by this certificate. Consignors and consignees in the United States exporting or importing shipments under this certificate shall satisfy the requirements of Subpart H of 10 CFR 71.

5. Expiration Date - This certificate expires January 31, 2010.

---

1 "Regulations for the Safe Transport of Radioactive Material, 1996 Edition (Revised), No. TS-R-1 (ST-1, Revised)," published by the International Atomic Energy Agency (IAEA), Vienna, Austria.

2 Title 49, Code of Federal Regulations, Parts 100 - 199, United States of America.

CERTIFICATE USA/0694/S, REVISION 0

This certificate is issued in accordance with paragraph 804 of the IAEA Regulations and Section 173.476 of Title 49 of the Code of Federal Regulations, in response to the petition and information dated November 24, 2004, December 1, 2004 and December 6, 2004 submitted by AEA Technology QSA, Inc., Burlington, MA, and in consideration of other information on file in this Office.

Certified by:

Robert A. McGuire
Associate Administrator for
Hazardous Materials Safety

DEC 10 2004
(DATE)

Revision 0 - Original issue.

ITEM	DESCRIPTION	QTY
1	CAPSULE HOLDER X0876 ST. STEEL	1
2	RETAINER ST. STEEL	2
3	SCREW CH. HD. 10BAx1/8" LG. STAIN. STEEL	4
4	ASSY. OF CAPSULE XN46	1
5	ACTIVE MATERIAL	——

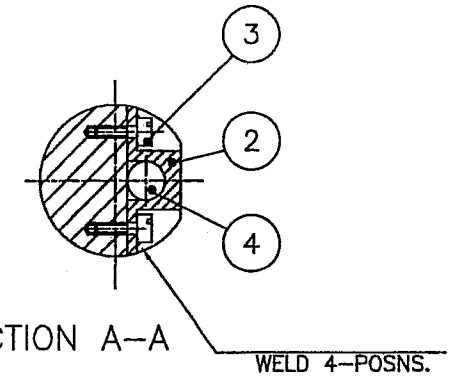

SECTION A–A

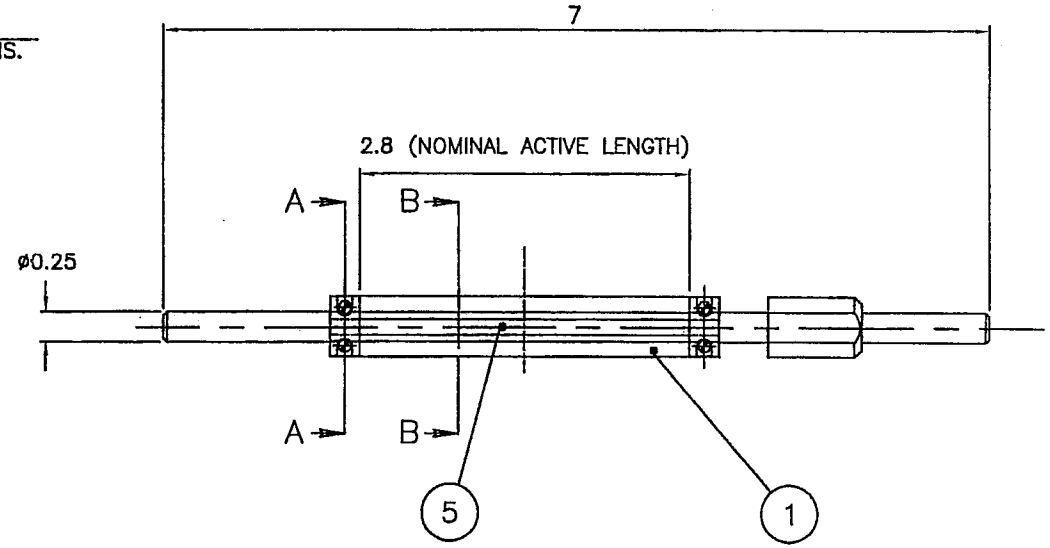

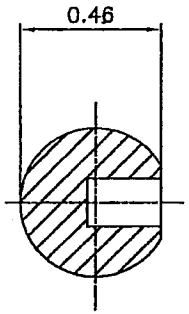

SECTION B–B

APPROVALS	
R. [signature]	1 Dec 04
[signature]	1 Dec 04

DIMENSIONS IN INCHES

AEA TECHNOLOGY QSA
40 NORTH AVE, BURLINGTON, MA 01803

DESCRIPTIVE DRAWING

TITLE XN46 CAPSULE IN X0876

SIZE A | DWG. NO. RBA63137 | REV B

SCALE: NONE | SHEET 1 OF 1

ERF # 944

ITEM	DESCRIPTION		QTY
1	BODY	STAIN. STEEL	1
2	PLUG	STAIN. STEEL	2
3	CERAMIC FIBRE PACKING		A/R
4	Am241 GLASS BEADS ø 0.108		A/R

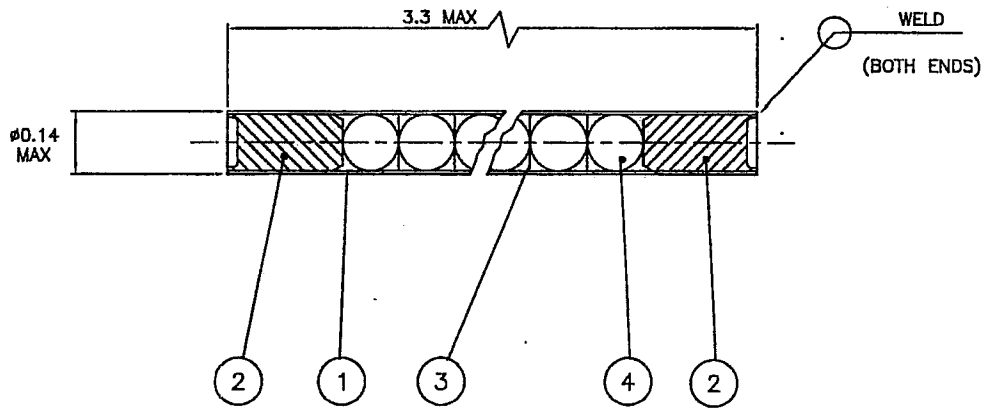

APPROVALS	
R. [signature]	22 Nov 04
[signature]	22 Nov 04

DIMENSIONS IN INCHES

AEA TECHNOLOGY QSA
40 NORTH AVE, BURLINGTON, MA 01803

DESCRIPTIVE DRAWING

TITLE XN46 CAPSULE ASSEMBLY

SIZE A | DWG. NO. RBA62541 | REV A

SCALE: NONE | SHEET 1 OF 1

ERF # 937