U.S. Department
of Transportation
**Research and
Special Programs
Administration**

400 Seventh St., S.W.
Washington, D.C. 20590

IAEA CERTIFICATE OF COMPETENT AUTHORITY
SPECIAL FORM RADIOACTIVE MATERIALS
CERTIFICATE NUMBER USA/0692/S, REVISION 0

This certifies that the sources described have been demonstrated to meet the regulatory requirements for special form radioactive material as prescribed in the regulations of the International Atomic Energy Agency[1] and the United States of America[2] for the transport of radioactive materials.

1. Source Identification - AEA Technology QSA, Inc. Models X2162/1 through X2162/7 (All models manufactured on or after November 23, 1994).

2. Source Description - Cylindrical double encapsulations made of stainless steel and seal welded. Approximate exterior dimensions are 6.3 mm (0.25 in.) in diameter and 24.0 mm (0.94 in.) in length. Minimum wall thickness of the outer encapsulation is 0.48 mm (0.02 in.). Cavity size of the inner encapsulations vary by model. Construction shall be in accordance with attached AEA Technology QSA, Inc. Drawing No. RBA62556, Rev. A.

3. Radioactive Contents - No more than 7.5 TBq (202.7 Ci) of Cobalt-60. The Co-60 is in the form of a metallic solid.

4. Quality Assurance - Records of Quality Assurance activities required by Paragraph 310 of the IAEA regulations[1] shall be maintained and made available to the authorized officials for at least three years after the last shipment authorized by this certificate. Consignors and consignees in the United States exporting or importing shipments under this certificate shall satisfy the requirements of Subpart H of 10 CFR 71.

5. Expiration Date - This certificate expires January 31, 2010.

---

1 "Regulations for the Safe Transport of Radioactive Material, 1996 Edition (Revised), No. TS-R-1 (ST-1, Revised)," published by the International Atomic Energy Agency (IAEA), Vienna, Austria.

2 Title 49, Code of Federal Regulations, Parts 100 - 199, United States of America.

CERTIFICATE USA/0692/S, REVISION 0

This certificate is issued in accordance with paragraph 804 of the IAEA Regulations and Section 173.476 of Title 49 of the Code of Federal Regulations, in response to the petition and information dated November 24, 2004 submitted by AEA Technology QSA, Inc., Burlington, MA, and in consideration of other information on file in this Office.

Certified by:

Robert A. McGuire
Associate Administrator for
Hazardous Materials Safety

DEC - 6 2004
(DATE)

Revision 0 - Original issue.

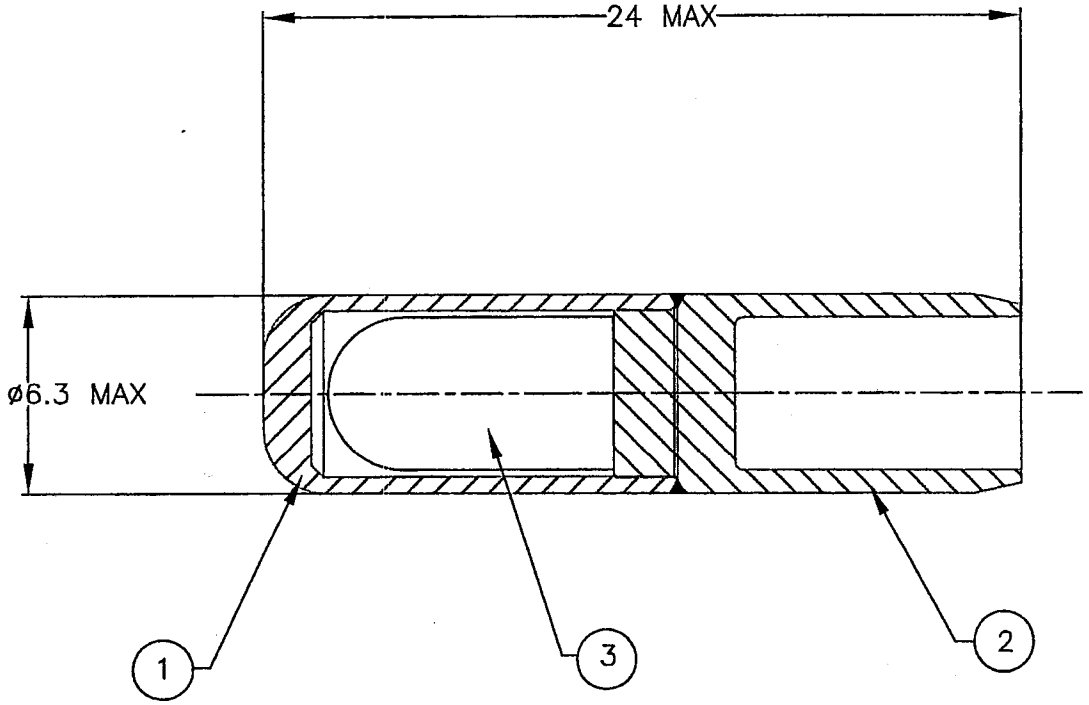

NOTE: INNER CAPSULE INTERNAL DIMENSIONS ARE VARIABLE TO PRODUCE THE x2162/n DESIGNATIONS. OUTER DIMENSIONS OF ALL INNER CAPSULES VARIATIONS ARE 5mm DIAMETER BY 9.5mm LONG.

ITEM #	DESCRIPTION	MATERIAL
3	INNER CAPSULE ASSY	TITANIUM
2	SHEATH LID	STAIN. STEEL
1	SHEATH BODY	STAIN. STEEL

APPROVALS	DATE
R. [signature]	22 Nov 04
[signature]	22 Nov 04

UNLESS OTHERWISE SPECIFIED DIMENSIONS IN MILLIMETERS

AEA TECHNOLOGY QSA
40 NORTH AVE, BURLINGTON, MA 01803

DESCRIPTIVE DRAWING

TITLE X2162/1 THRU 7 CAPSULE

SIZE A | DWG. NO. RBA62556 | REV A

SCALE: – | SHEET 1 OF 1

ERF #	937