U.S. Department
of Transportation
**Research and
Special Programs
Administration**

400 Seventh St., S.W.
Washington, D.C. 20590

IAEA CERTIFICATE OF COMPETENT AUTHORITY
SPECIAL FORM RADIOACTIVE MATERIALS
CERTIFICATE NUMBER USA/0685/S, REVISION 0

This certifies that the source described has been demonstrated to meet the regulatory requirements for special form radioactive material as prescribed in the regulations of the International Atomic Energy Agency[1] and the United States of America[2] for the transport of radioactive materials.

1. Source Identification - AEA Technology QSA, Inc. Model X.117 (Manufactured on or after May 11, 1981).

2. Source Description - Cylindrical double encapsulation made of stainless steel and tungsten inert gas or laser seal welded. The Model X.117 incorporates silver gaskets and tungsten and alumina inserts. Approximate exterior dimensions are 18.95 mm (0.75 in.) in diameter and 12.25 mm (0.48 in.) in length. Minimum wall thickness is 0.06 mm (0.002 in.). Construction shall be in accordance with attached AEA Technology QSA, Inc. Drawing No. RBA61891, Rev. A.

3. Radioactive Contents - No more than 22.2 GBq (600.0 mCi) of Strontium-90. The Sr-90 is in the form of an enamel.

4. Quality Assurance - Records of Quality Assurance activities required by Paragraph 310 of the IAEA regulations[1] shall be maintained and made available to the authorized officials for at least three years after the last shipment authorized by this certificate. Consignors and consignees in the United States exporting or importing shipments under this certificate shall satisfy the requirements of Subpart H of 10 CFR 71.

5. Expiration Date - This certificate expires October 31, 2009.

---

1 "Regulations for the Safe Transport of Radioactive Material, 1996 Edition (Revised), No. TS-R-1 (ST-1, Revised)," published by the International Atomic Energy Agency (IAEA), Vienna, Austria.

2 Title 49, Code of Federal Regulations, Parts 100 - 199, United States of America.

CERTIFICATE USA/0685/S, REVISION 0

This certificate is issued in accordance with paragraph 804 of the IAEA Regulations and Section 173.476 of Title 49 of the Code of Federal Regulations, in response to the petition and information dated September 23, 2004 submitted by AEA Technology QSA, Inc., Burlington, MA, and in consideration of other information on file in this Office.

Certified by:

Robert A. McGuire
Associate Administrator for
Hazardous Materials Safety

OCT 25 2004
(DATE)

Revision 0 - Original issue.

Item	Description		No off
1	RETAINING RING	STAIN. STL.	1
2	SHEATH WINDOW	STAIN. STL.	1
3	SHEATH BODY	STAIN. STL.	1
4	SHEATH LID	STAIN. STL.	1
5	INNER SURROUND	TUNGSTEN ALLOY	1
6	CELL BODY	STAIN. STL.	1
7	CELL LID	STAIN. STL.	1
8	CELL GASKET	SILVER WIRE ø1	A/R
9	CELL INSERT	ALUMINA	1
10	CELL WINDOW	STAIN. STL.	1
11	SHEATH GASKET	SILVER WIRE ø1	A/R
12	ACTIVE MATERIAL		A/R

CELL DETAIL
SCALE 2/1

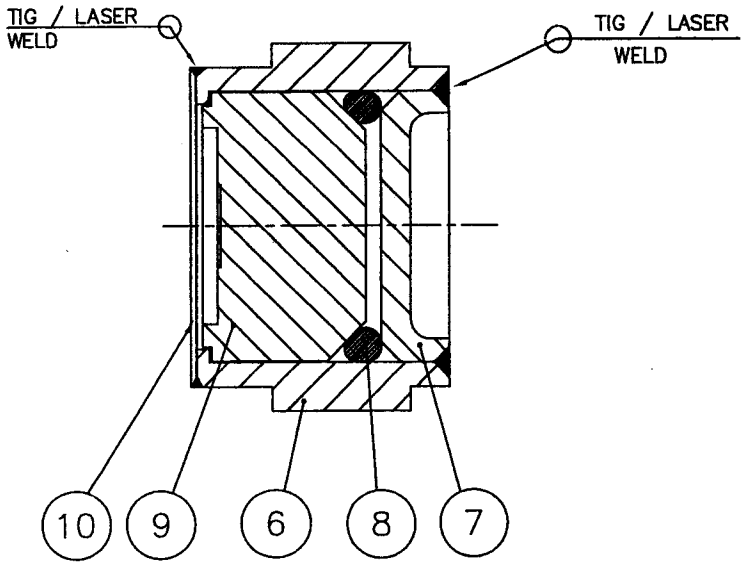

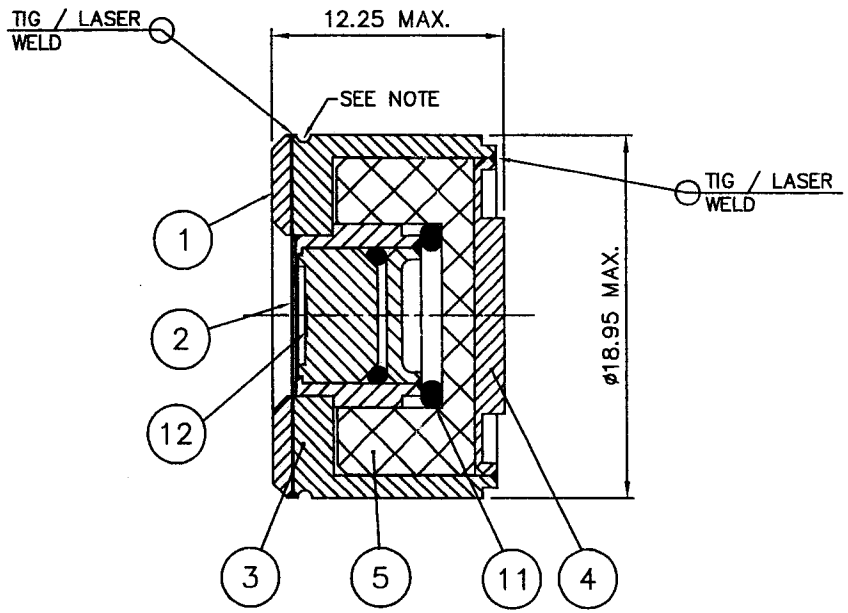

NOTE: RECESS NOT PRESENT ON ALL CAPSULES

ERF #	895

APPROVALS	
R. [signature]	21 Sep 04
[signature]	21 Sep 04

DIMENSIONS IN MILLIMETERES
UNLESS OTHERWISE STATED TOLERANCES:

X ±0.5
X.X ±0.1
X.XX ±0.05
ANGULAR ±5°

INTERNAL N7
EXTERNAL N6

AEA TECHNOLOGY
QSA
40 NORTH AVE, BURLINGTON, MA 01803

DESCRIPTIVE DRAWING

TITLE X117 / VZ-2523 CAPSULE ASSEMBLY

SIZE	DWG. NO.		REV
A	RBA61891		A
	SCALE: NONE	SHEET 1 OF 1	