U.S. Department
of Transportation
**Research and
Special Programs
Administration**

400 Seventh St., S.W.
Washington, D.C. 20590

**IAEA CERTIFICATE OF COMPETENT AUTHORITY
SPECIAL FORM RADIOACTIVE MATERIALS
CERTIFICATE NUMBER USA/0682/S, REVISION 0**

This certifies that the source described has been demonstrated to meet the regulatory requirements for special form radioactive material as prescribed in the regulations of the International Atomic Energy Agency[1] and the United States of America[2] for the transport of radioactive materials.

1. Source Identification - AEA Technology QSA, Inc. Model XN294/XN295 (Manufactured on or after August 20, 1981).

2. Source Description - Cylindrical double encapsulation made of stainless steel and tungsten inert gas or laser seal welded. Approximate exterior dimensions are 27.9 mm (1.1 in.) maximum diameter and 134.6 mm (5.3 in.) in length. Construction shall be in accordance with attached AEA Technology QSA, Inc. Drawing No. RBA61144, Rev. A.

3. Radioactive Contents - No more than 925.0 GBq (25.0 Ci) of Americium-241. The Am-241 is in the form of an oxide mixed with a beryllium powder that is then pressed into a solid pellet.

4. Quality Assurance - Records of Quality Assurance activities required by Paragraph 310 of the IAEA regulations[1] shall be maintained and made available to the authorized officials for at least three years after the last shipment authorized by this certificate. Consignors and consignees in the United States exporting or importing shipments under this certificate shall satisfy the requirements of Subpart H of 10 CFR 71.

5. Expiration Date - This certificate expires October 31, 2009.

---

1 "Regulations for the Safe Transport of Radioactive Material, 1996 Edition (Revised), No. TS-R-1 (ST-1, Revised)," published by the International Atomic Energy Agency (IAEA), Vienna, Austria.

2 Title 49, Code of Federal Regulations, Parts 100 - 199, United States of America.

CERTIFICATE USA/0682/S, REVISION 0

This certificate is issued in accordance with paragraph 804 of the IAEA Regulations and Section 173.476 of Title 49 of the Code of Federal Regulations, in response to the petition and information dated September 7, 2004 submitted by AEA Technology QSA, Inc., Burlington, MA, and in consideration of other information on file in this Office.

Certified by:

Robert A. McGuire
Associate Administrator for
Hazardous Materials Safety

OCT -5 2004
(DATE)

Revision 0 - Original issue.

ITEM	DESCRIPTION		QTY
1	SHEATH LID	STAIN. STL.	1
2	SHEATH BODY	STAIN. STL.	1
3	CELL LID	STAIN. STL.	1
4	CELL BODY	STAIN. STL.	1
5	ACTIVE MATERIAL		A/R

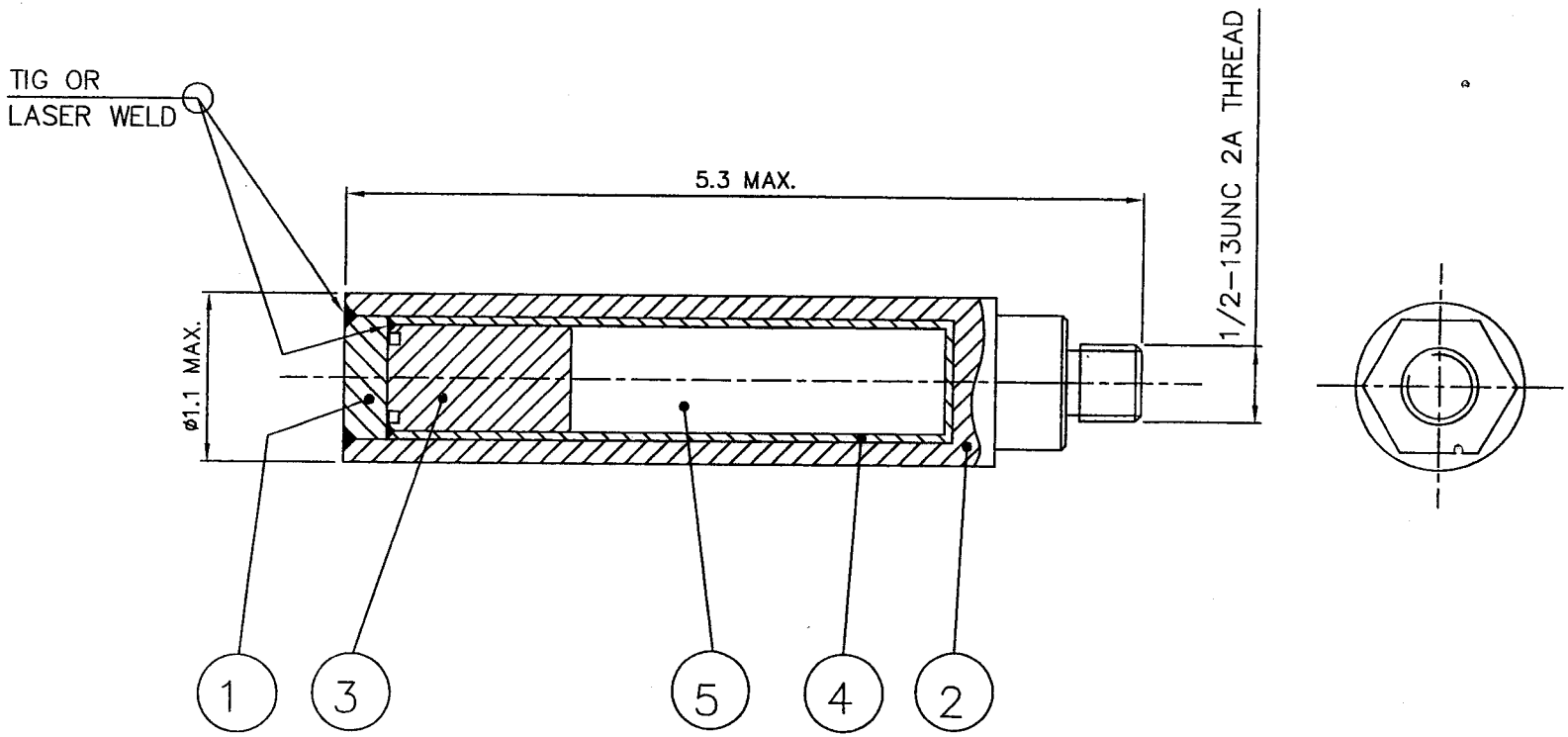

APPROVALS	
R. [illegible]	7 Sep 04
L. [illegible]	7 Sep 04

DIMENSIONS IN INCHES
UNLESS OTHERWISE STATED TOLERANCES:

X ±0.5
X.X ±0.1
X.XX ±0.05
ANGULAR ±5°

INTERNAL N7
EXTERNAL N6

AEA TECHNOLOGY QSA
40 NORTH AVE, BURLINGTON, MA 01803

DESCRIPTIVE DRAWING

TITLE XN294/XN295 CAPSULE ASSEMBLY

SIZE A | DWG. NO. RBA61144 | REV A

SCALE: NONE | SHEET 1 OF 1

ERF # 891