U.S. Department of Transportation
Research and Special Programs Administration

400 Seventh St., S.W.
Washington, D.C. 20590

IAEA CERTIFICATE OF COMPETENT AUTHORITY
SPECIAL FORM RADIOACTIVE MATERIALS
CERTIFICATE NUMBER USA/0678/S, REVISION 0

This certifies that the source described has been demonstrated to meet the regulatory requirements for special form radioactive material as prescribed in the regulations of the International Atomic Energy Agency[1] and the United States of America[2] for the transport of radioactive materials.

1. Source Identification - AEA Technology QSA, Inc. Model X93 (Manufactered on or after May 15, 1981).

2. Source Description - Cylindrical single encapsulation made of stainless steel and tungsten inert gas or laser seal welded. Approximate exterior dimensions are 30.2 mm (1.19 in.) in diameter and 6.3 mm (0.25 in.) in length. Minimum wall thickness is 0.2 mm (0.008 in.). Construction shall be in accordance with attached AEA Technology QSA, Inc. Drawing No. RBA11069, Rev. B.

3. Radioactive Contents - No more than 74.0 GBq (2.0 Ci) of Americium-241 in the form of an oxide pressed into a ceramic.

4. Quality Assurance - Records of Quality Assurance activities required by Paragraph 310 of the IAEA regulations[1] shall be maintained and made available to the authorized officials for at least three years after the last shipment authorized by this certificate. Consignors and consignees in the United States exporting or importing shipments under this certificate shall satisfy the requirements of Subpart H of 10 CFR 71.

5. Expiration Date - This certificate expires August 31, 2009.

This certificate is issued in accordance with paragraph 804 of the IAEA Regulations and Section 173.476 of Title 49 of the Code of Federal Regulations, in response to the petition and information dated June 29, 2004 submitted by AEA Technology QSA, Inc., Burlington, MA, and in consideration of other information on file in this Office.

Certified by:

Robert A. McGuire
Associate Administrator for
Hazardous Materials Safety

SEP - 3 2004
(DATE)

Revision 0 - Original issue.

---

1 "Regulations for the Safe Transport of Radioactive Material, 1996 Edition (Revised), No. TS-R-1 (ST-1, Revised)," published by the International Atomic Energy Agency (IAEA), Vienna, Austria.

2 Title 49, Code of Federal Regulations, Parts 100 - 199, United States of America.

ITEM	DESCRIPTION		QTY
1	BODY	STAIN. STL.	1
2	LID	STAIN. STL.	1
3	INSERT	STAIN. STL.	1
4	GASKET (OPTIONAL)	METAL	1
5	ACTIVE MATERIAL		A/R
6	SPRING (OPTIONAL)	METAL	1

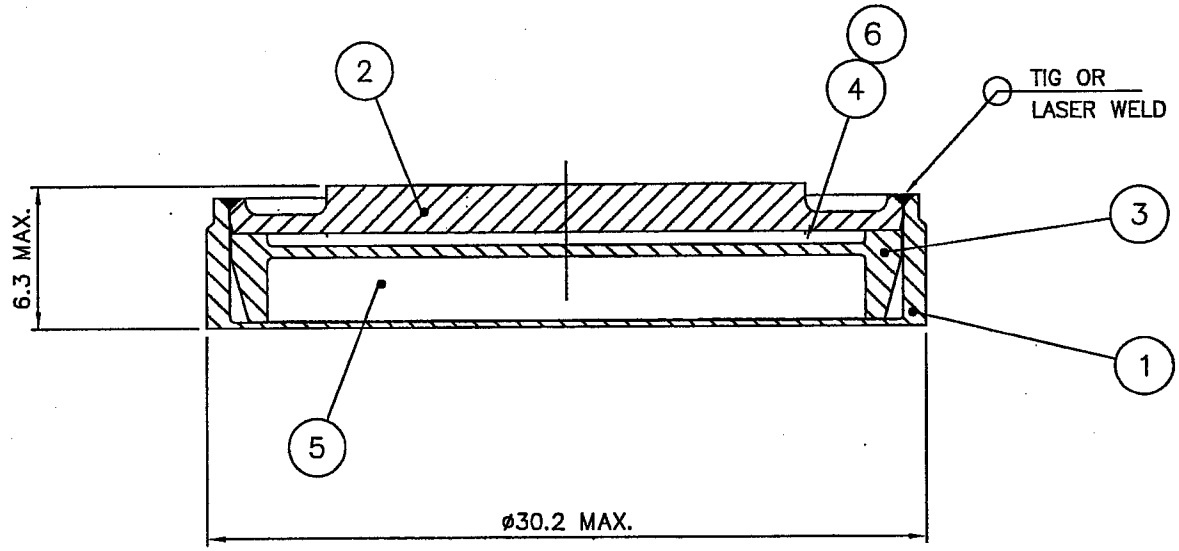

NOTES:

1. ITEMS 4 & 6 MATERIALS TO BE METALS OR METAL ALLOYS WITH A MINIMUM MELTING POINT OF 800°C.

2. ITEMS 4 & 6 DIMENSIONS AS NECESSARY TO ACHIEVE IMMOBILIZATION OF ITEM 3 INSERT WITHIN CAPSULE BODY & LID.

ERF #	853

APPROVALS

[illegible]	29 JUN 04
[illegible]	29 Jun 04

DIMENSIONS IN MILLIMETERES
UNLESS OTHERWISE STATED TOLERANCES:

X ±0.5
X.X ±0.1
X.XX ±0.05
ANGULAR ±5°

INTERNAL N7
EXTERNAL N6

AEATECHNOLOGY
QSA
40 NORTH AVE, BURLINGTON, MA 01803

DESCRIPTIVE DRAWING

TITLE X93 CAPSULE ASSEMBLY

SIZE A | DWG. NO. RBA11069 | REV B

SCALE: NONE | SHEET 1 OF 1