U.S. Department
of Transportation
**Pipeline and
Hazardous Materials
Safety Administration**

400 Seventh Street, S.W.
Washington, D.C. 20590

IAEA CERTIFICATE OF COMPETENT AUTHORITY
SPECIAL FORM RADIOACTIVE MATERIALS
CERTIFICATE NUMBER USA/0516/S-96, REVISION 2

This certifies that the sources described have been demonstrated to meet the regulatory requirements for special form radioactive material as prescribed in the regulations of the International Atomic Energy Agency[1] and United States of America[2] for the transport of radioactive materials.

1. Source Identification - Isotope Products Laboratories (IPL) source capsule Models 3224-01, 3224-02, 3224-03, 3224-11, 3224-12, 3224-13, and 3807.

2. Source Description - Cylindrical single encapsulations made of Type 304 or 304L stainless steel or titanium, with a 0.25 mm (0.010 in.) thick integral window at one end and fusion seal welded. Approximate outer dimensions of the 3224 models are either 3.0 mm (0.12 in.), 4.0 mm (0.16 in.), or 7.0 mm (0.28 in.) in diameter and 10.0 mm (0.39 in.) in length. Approximate outer dimensions of the 3804 model are 3.0 mm (0.12 in.) in diameter and 10.2 mm (0.4 in.) in length. Construction of the 3224 models shall be in accordance with attached IPL Drawing No. 3224-REG, Rev. -, Sheet 1 of 1. Construction of the 3807 model shall be in accordance with attached IPL Drawing No. 3807, Rev. B, Sheet 3 of 6.

3. Radioactive Contents - The sources described by this certificate are authorized to contain any one of the following radionuclides limited to the activity shown. The radionuclides are in the form of chlorides, nitrates, or oxides in ceramic or resin bead; oxides in gold or aluminum; or metal plated onto substrate. The Na-22 may also be in the form of NaCl in gold. The Ge-68 may also be in the form of GeO_2 in silver. The Sr-90 may also be in the form of $SrTiO_4$ in silver. The Ba-133 may also be in the form of $BaSO_4$ in ceramic.

Radionuclide	Activity MBq	(mCi)
Na-22	185	(5)
Co-57	11,100	(300)
Co-58	11,100	(300)
Co-60	370	(10)
Ge-68	1,850	(50)
Sr-90	4,625	(125)
Ru-106	1,850	(50)
Ba-133	3,700	(100)
Cs-137	11,100	(300)
Lanthanides*	11,100	(300)
Actinides**	11,100	(300)

* (Isotopes of Ce, Pr, Sm, Eu, Yb, and Tm only)
** (Isotopes of Ac, Th, Pa, U, Pu, Am, and Cm only)

---

[1] "Regulations for the Safe Transport of Radioactive Materials, 1996 Edition (Revised), No. TS-R-1 (ST-1, Revised)," published by the International Atomic Energy Agency (IAEA), Vienna, Austria.

[2] Title 49, Code of Federal Regulations, Parts 100 - 199, United States of America.

4. Quality Assurance - Records of Quality Assurance activities required by Paragraph 310 of the IAEA regulations[1] shall be maintained and made available to the authorized officials for at least three years after the last shipment authorized by this certificate. Consignors and consignees in the United States exporting or importing shipments under this certificate shall satisfy the requirements of Subpart H of 10 CFR 71.

5. Expiration Date - This certificate expires June 30, 2011.

This certificate is issued in accordance with paragraph 804 of the IAEA Regulations and Section 173.476 of Title 49 of the Code of Federal Regulations, in response to the petition and information dated May 23, 2006 submitted by Isotope Products Laboratories, Valencia, CA and in consideration of other information on file in this Office.

Certified by:

JUN 19 2006

Robert A. McGuire
Associate Administrator
for Hazardous Materials Safety

(DATE)

Revision 2 - Issued to update model numbers, drawings and radioactive contents; and extend the expiration date.

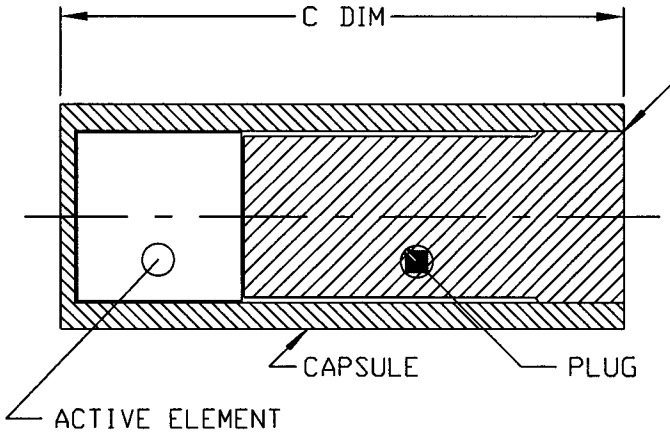

SECTION A-A

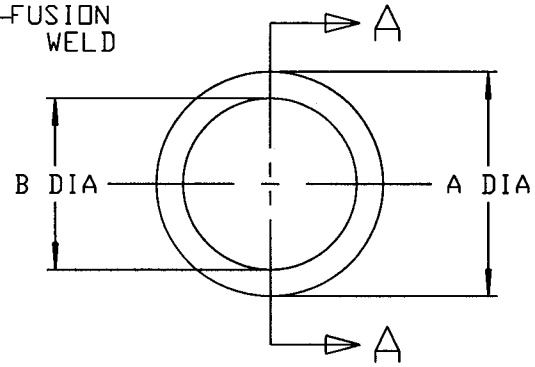

P/N: 3224-XY ASSEMBLY

TABLE 1	
X	MATERIAL
0	304 or 304L STAINLESS STEEL
1	TITANIUM

TABLE 2			
Y	A DIA	B DIA	C DIM
1	0. 12	0. 08	0. 39
2	0. 16	0. 12	0. 39
3	0. 28	0. 19	0. 39
4	0. 12	0. 10	0. 20
5	0. 08	0. 05	0. 39

1. ASSEMBLE COMPLETE PER ENGINEERING DRAWING AND FUSION WELD AS REQUIRED

NOTE: UNLESS OTHERWISE SPECIFIED

Isotope Products Laboratories
An Eckert & Ziegler Company
VALENCIA, CALIFORNIA 91355

DESIGN	DRAWING TITLE			
LZ/DI	GFS INDUSTRIAL PHOTON SOURCE			
SCALE	SERIES TITLE			
NONE	INDUSTRIAL SOURCES, GFS AND XFB			
SIZE	CAGE CODE	REVISION	DRAWING NUMBER	SHEET
A	32993	-	3224-REG	1 OF 1

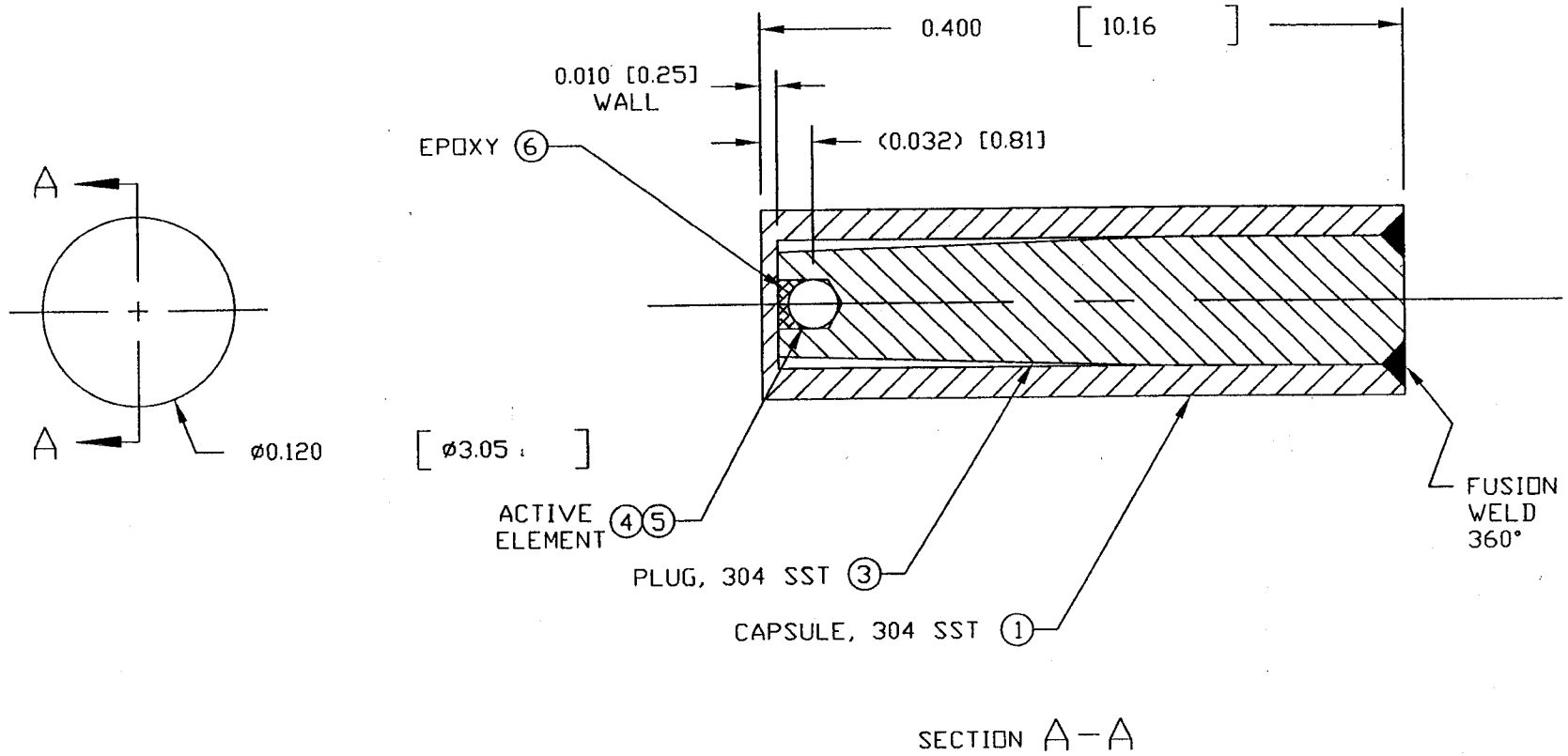

2. METRIC DIMENSIONS [mm] ARE IN MILLIMETERS.
1. ASSEMBLE COMPLETE PER ENGINEERING DRAWING.

NOTES: UNLESS OTHERWISE SPECIFIED

3807 ASSEMBLY

Isotope Products Laboratories An Eckert & Ziegler Company VALENCIA, CALIFORNIA 91355	DRAWN EW 12-JAN-87 ME/CHECKER KA 16-JAN-87 ENGR EW 12-JAN-87 SCALE NONE / SIZE A	TITLE Co-57 SOURCE AMERSHAM X. 101/2 CAPSULE DRAWING NO. 3807 / REV B SERIES TITLE INDUSTRIAL SOURCES, CUSTOM / SHEET 3 OF 6	