U.S. Department
of Transportation
**Pipeline and
Hazardous Materials
Safety Administration**

400 Seventh Street, S.W.
Washington, D.C. 20590

IAEA CERTIFICATE OF COMPETENT AUTHORITY
SPECIAL FORM RADIOACTIVE MATERIALS
CERTIFICATE NUMBER USA/0515/S-96, REVISION 2

This certifies that the sources described have been demonstrated to meet the regulatory requirements for special form radioactive material as prescribed in the regulations of the International Atomic Energy Agency[1] and United States of America[2] for the transport of radioactive materials.

1. Source Identification - Isotope Products Laboratories (IPL) source capsule Models 3201, 3202, and 3210.

2. Source Description - Cylindrical single encapsulations made of Type 304 or 304L stainless steel, with a 0.25 mm (0.010 in.) thick integral window at one end, and fusion seal welded. Approximate outer dimensions of the Models 3201 and 3202 are 7.9 mm (0.312 in.) in diameter and 5.1 mm (0.200 in.) in length. Approximate outer dimensions of the Model 3210 are 8.0 mm (0.313 in.) in diameter and 5.1 mm (0.200 in.) in length. Construction shall be in accordance with attached IPL Drawing Nos. 3201, Rev. G, Sheet 4 of 7; 3202, Rev. H, Sheet 5 of 8; or 3210, Rev -, Sheet 1 of 1.

3. Radioactive Contents - The sources described by this certificate are authorized to contain any one of the following radionuclides limited to the activity shown. The radionuclides are in the form of chlorides, nitrates, or oxides in ceramic; oxides in gold or aluminum; or metal plated onto substrate. The Na-22 may also be in the form of NaCl in gold or ceramic. The Ge-68 may also be in the form of GeO_2 in silver. The Sr-90 may also be in the form of $SrTiO_4$ in silver. The Ba-133 may also be in the form of $BaSo_4$ in ceramic.

Radionuclide	Activity MBq	(mCi)
Na-22	185	(5)
Co-57	11,100	(300)
Co-58	11,100	(300)
Co-60	370	(10)
Ge-68	1,850	(50)
Sr-90	4,625	(125)
Ru-106	1,850	(50)
Ba-133	3,700	(100)
Cs-137	11,100	(300)
Lanthanides*	11,100	(300)
Actinides**	11,100	(300)

* (Isotopes of Ce, Pr, Sm, Eu, Yb, and Tm only)
** (Isotopes of Ac, Th, Pa, U, Pu, Am, and Cm only)

---

[1] "Regulations for the Safe Transport of Radioactive Materials, 1996 Edition (Revised), No. TS-R-1 (ST-1, Revised)," published by the International Atomic Energy Agency (IAEA), Vienna, Austria.

[2] Title 49, Code of Federal Regulations, Parts 100 - 199, United States of America.

4. Quality Assurance - Records of Quality Assurance activities required by Paragraph 310 of the IAEA regulations[1] shall be maintained and made available to the authorized officials for at least three years after the last shipment authorized by this certificate. Consignors and consignees in the United States exporting or importing shipments under this certificate shall satisfy the requirements of Subpart H of 10 CFR 71.

5. Expiration Date - This certificate expires March 31, 2011.

This certificate is issued in accordance with paragraph 804 of the IAEA Regulations and Section 173.476 of Title 49 of the Code of Federal Regulations, in response to the petition and information dated January 16, 2006 submitted by Isotope Products Laboratories, Valencia, CA and in consideration of other information on file in this Office.

Certified by:

for Robert A. McGuire
Associate Administrator
for Hazardous Materials Safety

MAR 17 2006
(DATE)

Revision 2 - Issued to update model numbers, drawings, dimensions, and radioactive contents and extend the expiration date.

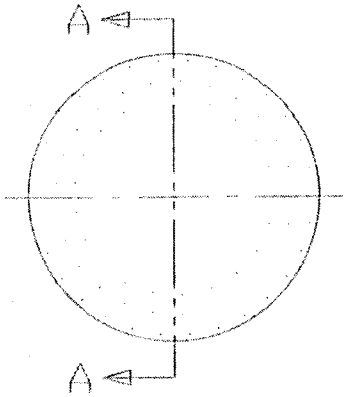

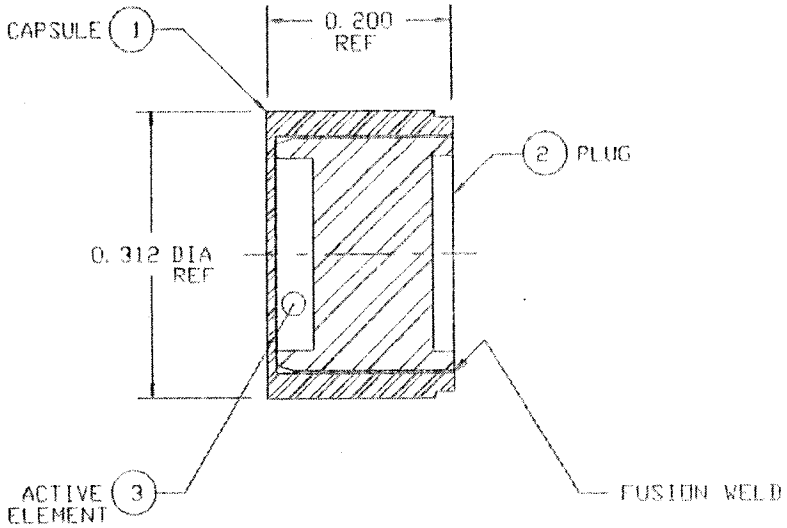

SECTION A-A

P/N: 3201 ASSEMBLY

ISOTOPE PRODUCTS LABORATORIES
BURBANK, CALIFORNIA 91504

	DATE: 01/25/94	DESIGNED: MG/DI
	TITLE: MODEL 3201 PHOTON SOURCE	REV/CHG: G
		SCALE: NONE
	SERIES: GFS AND XFB SOURCES (PHI & BFI)	DRAWING NUMBER 3201
		SHEET: 4 OF 7

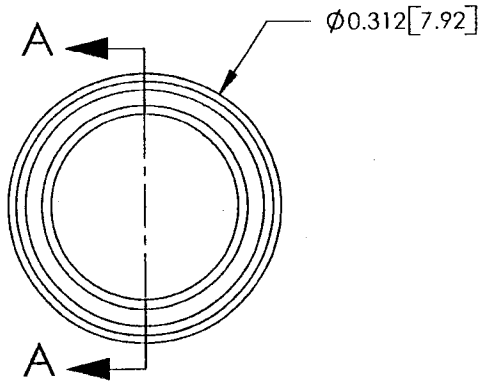

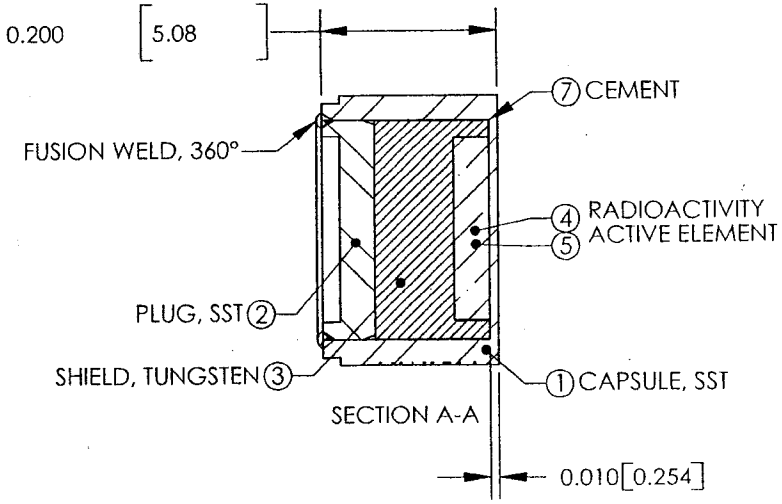

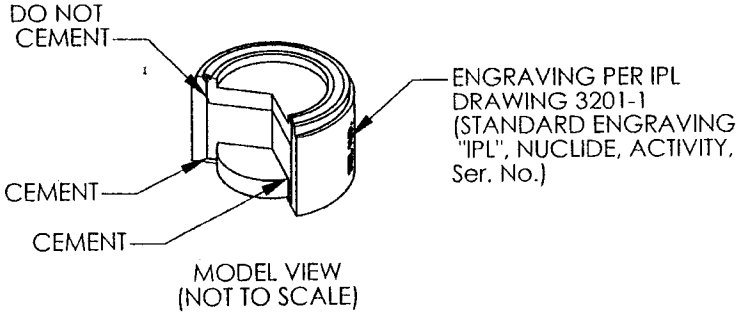

Isotope Products Laboratories An Eckert & Ziegler Company VALENCIA, CALIFORNIA 91355	UNLESS OTHERWISE SPECIFIED DIMENSIONS ARE IN INCH-SIZES. METRIC UNITS [mm] ARE IN MILLIMETERS.	DRAWN RLT ME/CHECKER EW ENGINEER JMD		TITLE MODEL GFS-3 PHOTON SOURCE SERIES TITLE GFS AND XFB SOURCES (PHI & BFI)			
		SCALE NONE	SIZE A	CAGE CODE 32993	DRAWING NO. 3202	REV H	SHEET 5 OF 8

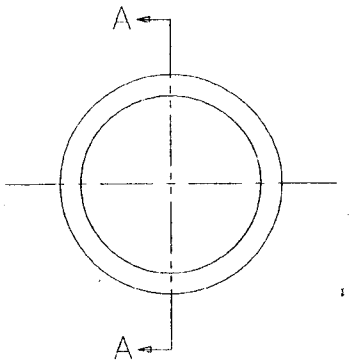

3210 CAPSULE ASSEMBLY

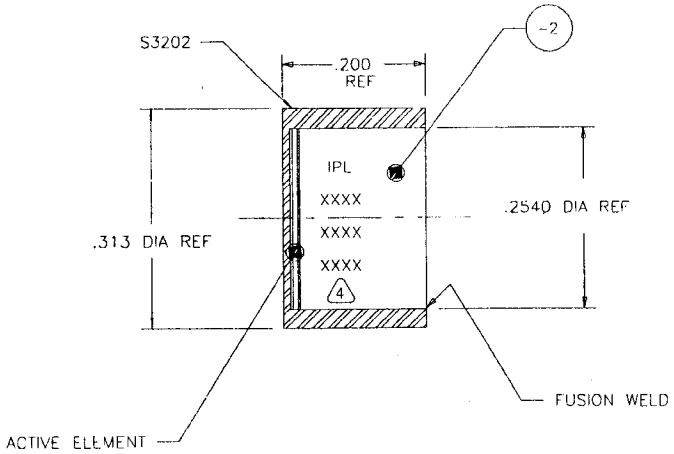

SECTION A–A

ISOTOPE PRODUCTS LABORATORIES
BURBANK, CALIFORNIA 91504

SCALE: NTS		DESIGNED: DFB/RLT
DATE: 09/17/93		REV/CHG: –
TITLE: CAPSULE ASSEMBLY, IPL MODEL GFS-3 WITH .010 WINDOW – PHOTON SOURCE		SHEET: 1 OF 1
SERIES: SERIES 3200 CAPSULE GFS & XFB SOURCES		DRAWING NUMBER 3210