U.S. Department of Transportation
Pipeline and Hazardous Materials Safety Administration

IAEA CERTIFICATE OF COMPETENT AUTHORITY
SPECIAL FORM RADIOACTIVE MATERIAL
CERTIFICATE NUMBER USA/0498/S-96, REVISION 2

400 Seventh Street, S.W.
Washington, D.C. 20590

This certifies that the source described has been demonstrated to meet the regulatory requirements for special form radioactive material as prescribed in the regulations of the International Atomic Energy Agency[1] and United States of America[2] for the transport of radioactive materials.

1. Source Identification - Isotope Products Laboratories (IPL) Model HEG-1.

2. Source Description - Cylindrical single encapsulation made of Type 304 or 304L stainless steel and fusion seal welded. Approximate outer dimensions are 4.7 mm (0.186 in.) in diameter and 5.7 mm (0.225 in.) in length. Construction shall be in accordance with attached IPL Drawing No. 3025, Sheet 3 of 3, dated 12/29/94.

3. Radioactive Contents - The source described by this certificate is authorized to contain any one of the following radionuclides in the chemical form identified and limited to the activity shown.

Radionuclide	Form	Activity GBq (Ci)
Na-22	NaCl in gold or ceramic	3.7 (0.10)
Co-57	CoO, $CoCl_2$ or $Co(NO_3)_2$ in ceramic	11.1 (0.30)
Co-58	CoO in ceramic	11.1 (0.30)
Co-60	CoO in ceramic or Ni clad Co pellets	11.1 (0.30)
Ge-68	$GeCl_4$ in ceramic	1.85 (0.05)
Ba-133	$BaSO_4$ or $BaCl_2$ in gold or ceramic	3.7 (0.10)
Cs-137	CsCl in gold or Cs in ceramic	11.1 (0.30)
Ra-226	$RaSO_4$ in gold or ceramic	1.85 (0.05)
Cf-252	Oxide in metal or ceramic	0.037(0.001)
Actinides*	Oxides in gold or ceramic	1.85 (0.05)

* (Isotopes of Ac, Th, Pa, Np, U, Pu, Am, and Cm)

4. Quality Assurance - Records of Quality Assurance activities required by Paragraph 310 of the IAEA regulations[1] shall be maintained and made available to the authorized officials for at least three years after the last shipment authorized by this certificate. Consignors and consignees in the United States exporting or importing shipments under this certificate shall satisfy the requirements of Subpart H of 10 CFR 71.

5. Expiration Date - This certificate expires October 31, 2010.

---

[1] "Regulations for the Safe Transport of Radioactive Materials, 1996 Edition (Revised), No. TS-R-1 (ST-1, Revised)," published by the International Atomic Energy Agency (IAEA), Vienna, Austria.

[2] Title 49, Code of Federal Regulations, Parts 100 - 199, United States of America.

CERTIFICATE USA/0498/S-96, REVISION 2

This certificate is issued in accordance with paragraph 804 of the IAEA Regulations and Section 173.476 of Title 49 of the Code of Federal Regulations, in response to the petition and information dated July 27, 2005 submitted by Isotope Products Laboratories, Valencia, CA and in consideration of other information on file in this Office.

Certified by:

for Robert A. McGuire
Associate Administrator
for Hazardous Materials Safety

NOV 29 2005
(DATE)

Revision 2 - Issued to extend the expiration date and correct typographical errors.

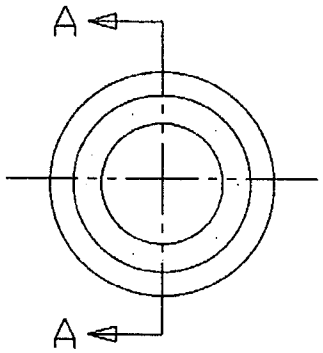

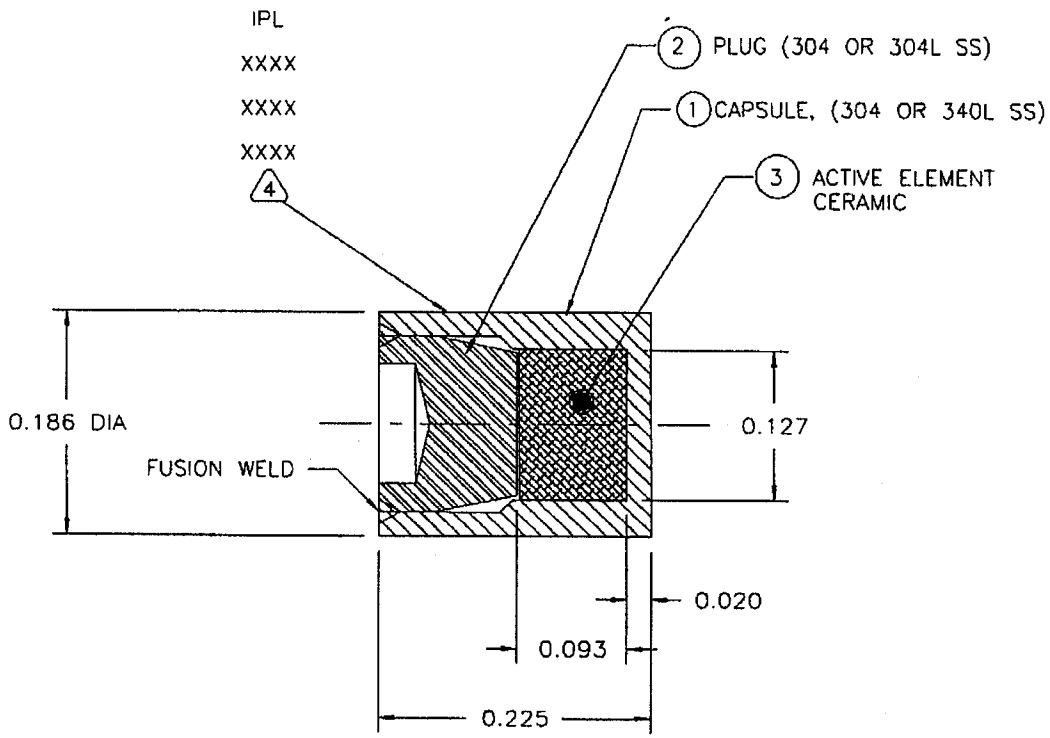

P/N: A3025 ASSEMBLY

SECTION A–A

5. PACKAGE AND IDENTIFY PART NUMBER THEREON

4 ENGRAVE CHARACTERS 0.060 HIGH x 0.003 DEEP MAX
ON CIRCUMFERENCE AND BLACK FILL WHEN NOT INSTALLED IN SECONDARY CAPSULE:
IPL
ISOTOPE
ACTIVITY
SERIAL NUMBER

3. TOLERANCES: 0.XXX 0.002, 0.XX 0.01 ±0.X 0.1, ANGLE 0.5 ± °
2. DIMENSIONS ARE IN INCHES
1. ASSEMBLE COMPLETE PER ENGINEERING DRAWING
AND FUSION WELD AS REQUIRED

NOTE: UNLESS OTHERWISE SPECIFIED

DATE: 12/29/94	SCALE: NTS	DRAWING NUMBER	SHEET:
DESIGNED: JMD/RLT	REV/CHG: –	3025	3 OF 3