U.S. Department
of Transportation
**Research and
Special Programs
Administration**

400 Seventh St., S.W.
Washington, D.C. 20590

IAEA CERTIFICATE OF COMPETENT AUTHORITY
SPECIAL FORM RADIOACTIVE MATERIALS
CERTIFICATE NUMBER USA/0464/S, REVISION 2

This certifies that the source described has been demonstrated to meet the regulatory requirements for special form radioactive material as prescribed in the regulations of the International Atomic Energy Agency[1] and the United States of America[2] for the transport of radioactive materials.

1. Source Identification - J.L. Shepherd & Associates Model 6810-190.

2. Source Description - Cylindrical triple encapsulation made of Type 304 stainless steel (outer encapsulation) and two Type 316 stainless steel inner double encapsulations, all heliarc seal welded. The outer encapsulation contains a double encapsulation at each end, separated by a spacer bar. Approximate exterior dimensions are 41.9 mm (1.65 in.) in diameter and 401.8 mm (15.82 in.) in length. Construction shall be in accordance with attached J.L. Shepherd and Associates Drawing Nos. A-0068-190-10 and A-0068-190.

3. Radioactive Contents - No more than 166.5 TBq (4,500.0 Ci) of Cesium-137. The Cs-137 is in the form of cesium chloride pellets.

4. Quality Assurance - Records of Quality Assurance activities required by Paragraph 310 of the IAEA regulations[1] shall be maintained and made available to the authorized officials for at least three years after the last shipment authorized by this certificate. Consignors and consignees in the United States exporting or importing shipments under this certificate shall satisfy the requirements of Subpart H of 10 CFR 71.

5. Expiration Date - This certificate expires September 30, 2009.

---

1 "Regulations for the Safe Transport of Radioactive Material, 1996 Edition (Revised), No. TS-R-1 (ST-1, Revised)," published by the International Atomic Energy Agency (IAEA), Vienna, Austria.

2 Title 49, Code of Federal Regulations, Parts 100 - 199, United States of America.

CERTIFICATE USA/0464/S, REVISION 2

This certificate is issued in accordance with paragraph 804 of the IAEA Regulations and Section 173.476 of Title 49 of the Code of Federal Regulations, in response to the petition and information dated September 21, 2004 submitted by J.L. Shepherd & Associates, San Fernando, CA, and in consideration of other information on file in this Office.

Certified by:

OCT - 8 2004

Robert A. McGuire
Associate Administrator for
Hazardous Materials Safety

(DATE)

Revision 2 - Issued to renew the expiration date.

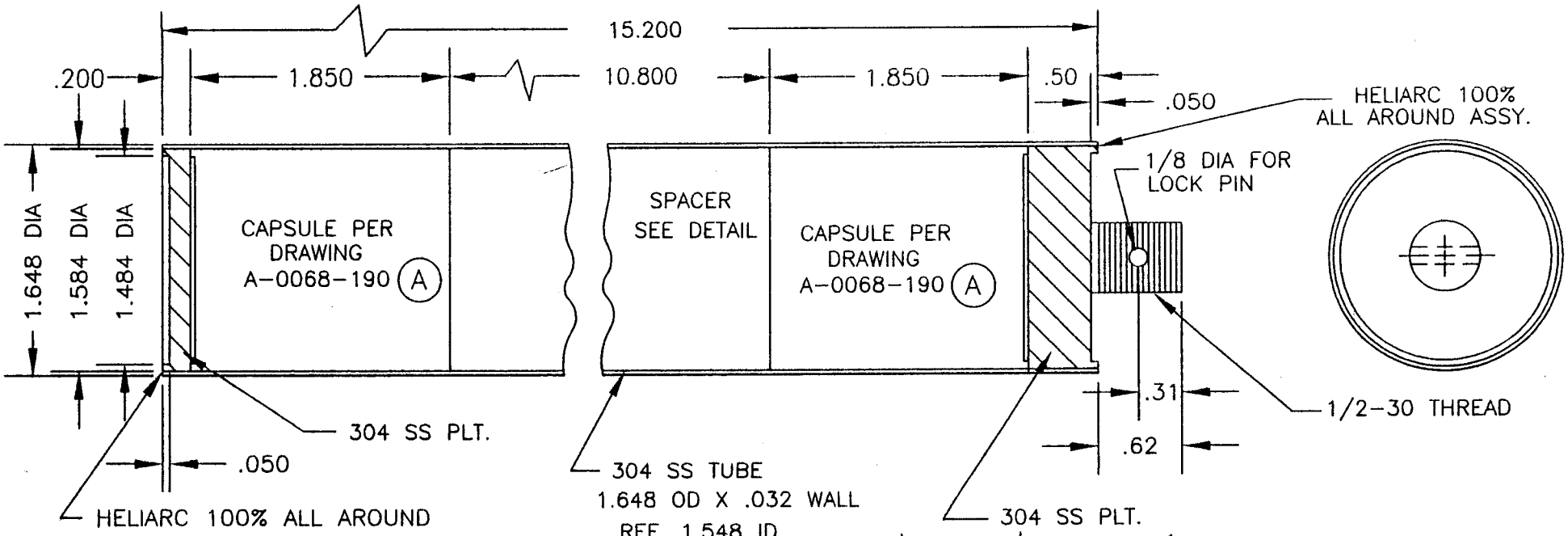

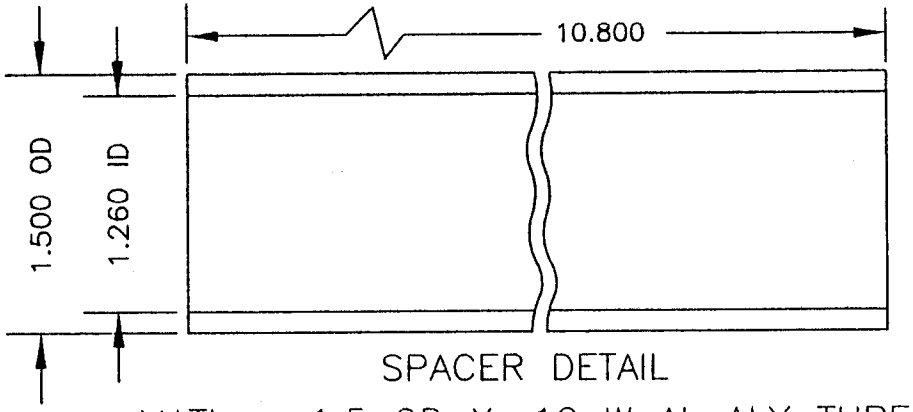

SPACER DETAIL

MATL = 1.5 OD X .12 W AL ALY TUBE

NOTES:

1. BOTH ENDCAPS TO HAVE .006 REGISTER & HAVE .0005 INTERFERENCE FIT.
2. THREADED END CAP TO BE WELDED PRIOR TO LOADING & BE HELIUM LEAK TESTED TO SENSITIVITY OF 1×10^{7} CC/Min.
3. LOCK PIN HOLE TO BE MATCH DRILLED WITH TUNGSTEN SOURCE HOLDER
4. COMPLETED CAPSULE TO HAVE 5 x 10 mCi COMTAMINATION.
5. COMPLETED CAPSULE MUST PASS HELIUM LEAK TEST OR LIQUID N_2 BUBBLE TEST.
6. CAPSULE TO BE CERTIFIED "SPECIAL FORM"

REV. (A) 8-06-98 DWG. NUMBER CORRECTION

J. L. SHEPHERD *and Associates*			
DRAWN BY D. TRAN	DATE 10-7-92	APPROVED BY	SCALE NONE
TYPE 6810-190-10 TRIPLE SOURCE			
CAPSULE TYPE 6810-2000 Ci Cs-137		A-0068-190-10	

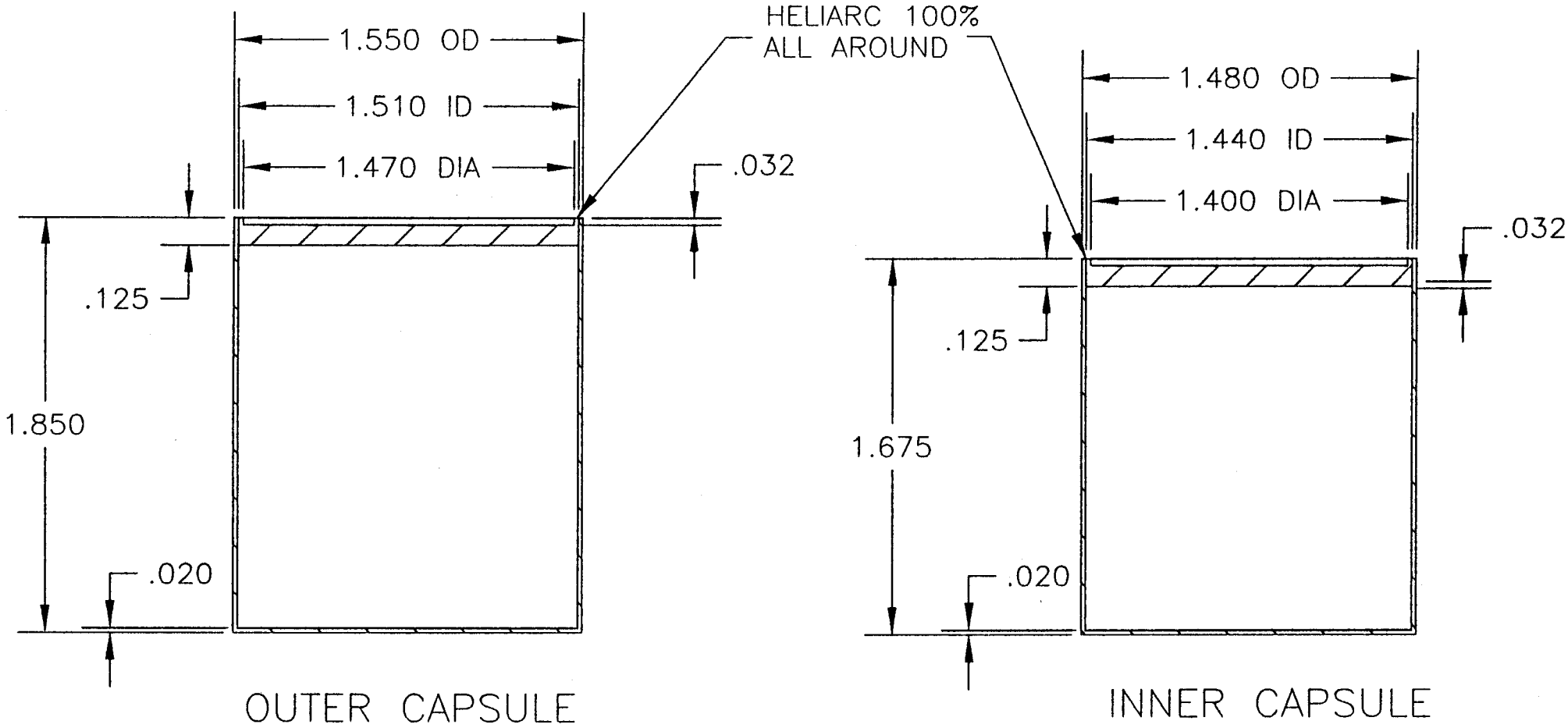

NOTED:

1. MATL 316L S.S.
2. PLUGS .0005 INTERFERENCE FIT.
3. REMOVEABLE CONTAMINATION $\leqslant 5 \times 10^{-4}$ mCI
4. INNER & OUTER MUST PASS BUBBLE TEST & HELIUM LEAKS TEST AFTER FABRICATION
5. CHEMICAL FORM OF CS-137 IS CsCi SPECIFICATION $\geqslant$12 Ci/gm WT CsCi<100g

J. L. SHEPHERD *and Associates*			
DRAWN BY D. TRAN	DATE 10-7-92	APPROVED BY	SCALE NONE
TYPE 6810-190 CAPSULES			
		A-0068-190	