U.S. Department
of Transportation

**Pipeline and
Hazardous Materials
Safety Administration**

**400 Seventh Street, S.W.
Washington, D.C. 20590**

**COMPETENT AUTHORITY CERTIFICATION
FOR A FISSILE
RADIOACTIVE MATERIALS PACKAGE DESIGN
CERTIFICATE USA/0411/AF, REVISION 9**

This certifies that the radioactive materials package design described below has been certified by the Competent Authority of the United States as meeting the regulatory requirements for a Type AF packaging for fissile radioactive materials as prescribed in the regulations of the International Atomic Energy Agency and the United States of America.

1. Package Identification - Cylinder Model Nos. 5A, 5B, 8A, 12A, 12B, 30A, 30B, 48A, 48X, 48F, 48Y, 48G, 48H, and 48HX.

2. Packaging Description - The packaging authorized by this certificate are bare metal cylinders (no protective overpacks required) which are designed, fabricated, inspected and marked in accordance with American National Standards Institute (ANSI) N14.1 standard in effect at the time of manufacture. Cylinders must be periodically inspected, tested, marked, repaired, and modified in accordance with the ANSI N14.1 standard in effect at the time of the action.

3. Authorized Radioactive Contents - The cylinders authorized by this certificate may contain fissile quantities of residual (heels) uranium hexafluoride as described and limited by Table 1. Minimum criticality safety index for these cylinders is 0.0.

TABLE 1 - Allowable Content Of Uranium Hexafluoride (UF_6) "Heels" In An ANSI N14.1 Cylinder

Maximum cylinder diameter		Cylinder Volume		Maximum Uranium-235 enrichment (weight percent)	Maximum "heel" weight per cylinder			
					UF6		Uranium-235	
Inches	Centi-meters	Cubic Feet	Liters		kg	Lb	kg	Lb
5	12.7	0.311	8.8	100	0.045	0.1	0.031	0.07
8	20.3	1.359	39	12.5	0.227	0.5	0.019	0.04
12	30.5	2.410	68	5	0.454	1.0	0.015	0.03
30	76.0	25.64	725	5	11.3	25	0.383	0.84
48	122.0	108.9 (10 ton)	3084	4.5	22.7	50	0.690	1.52
48	122.0	142.7 (14 ton)	4041	4.5	22.7	50	0.690	1.52

---

[1]"TS-R-1 (ST-1, Revised), Regulations for the Safe Transport of Radioactive Material, 1996 Edition (Revised)," published by the International Atomic Energy Agency (IAEA), Vienna, Austria.

[2]Title 49, Code of Federal Regulations, Parts 100 - 199, United States of America

CERTIFICATE USA/0411/AF, REVISION 9

4. General Conditions

   a. Each user of this certificate must have in his possession a copy of this certificate and all documents necessary to properly prepare the package for transportation in accordance with the endorsed certificate.

   b. Each user of this certificate, other than the original petitioner, shall register his identity in writing to the Office of Hazardous Materials Technology (PHH-23), Pipeline and Hazardous Materials Safety Administration, U.S. Department of Transportation, Washington D.C. 20590.

   c. This certificate does not relieve any consignor or carrier from compliance with any requirement of the Government of any country through or into which the package is to be transported.

4. Marking and Labeling - The package shall bear the marking USA/0411/AF in addition to other required markings and labeling.

5. Expiration Date - This certificate expires on September 1, 2011.

This certificate is issued in accordance with paragraph 814 of the IAEA Regulations and Section 173.472 of Title 49 of the Code of Federal Regulations, in response to a August 26, 2006 petition submitted by United States Enrichment Corporation, Paducah, KY, and in consideration of other information on file in this Office.

Certified by:

Robert A. McGuire
Associate Administrator for Hazardous Materials Safety

AUG 11 2006
(DATE)

Revision 9 - Issued to restrict use to fissile material and to extend the expiration date.

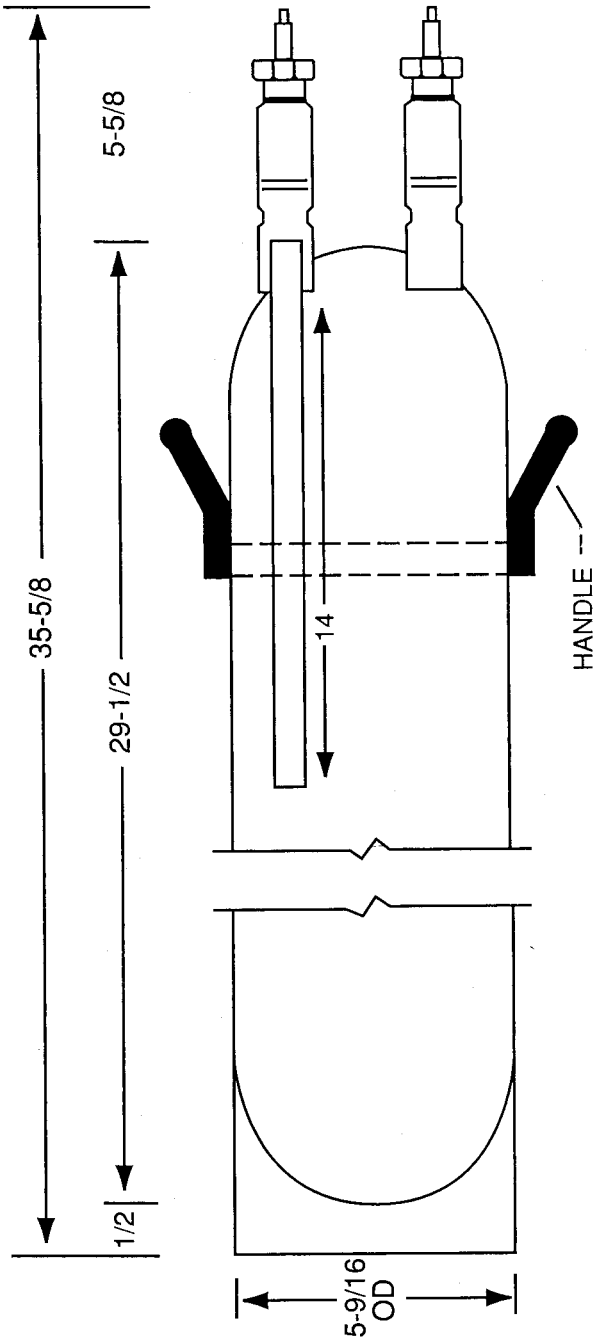

FIGURE 16

Schematic of Cylinder Models 5A and 5B

6.4 UF_6 Cylinder Models 5A and 5B

Nominal Diameter ..... 5 in. (127 mm)
Nominal Length ..... 36 in. (914 mm)
Wall Thickness ..... 1/4 in. (6.5 mm)
Nominal Tare Weight ..... 55 lb (24.95 kg)
Maximum Net Weight ..... 55 lb (24.95 kg)
Nominal Gross Weight ... 110 lb (without cap) (49.9 kg)
Minimum Volume ..... 0.284 ft^3 (8.04 liters)
Basic Material of Construction 5A ..... Monel
Basic Material of Construction 5B ..... Nickel
Service Pressure ..... 200 psig (1380 kPa gage)
Hydrostatic Test Pressure ..... 400 psig (2760 kPa gage)
Isotopic Content Limit ..... 100% ^{235}U

Valve Used - 3/4-in. valve.

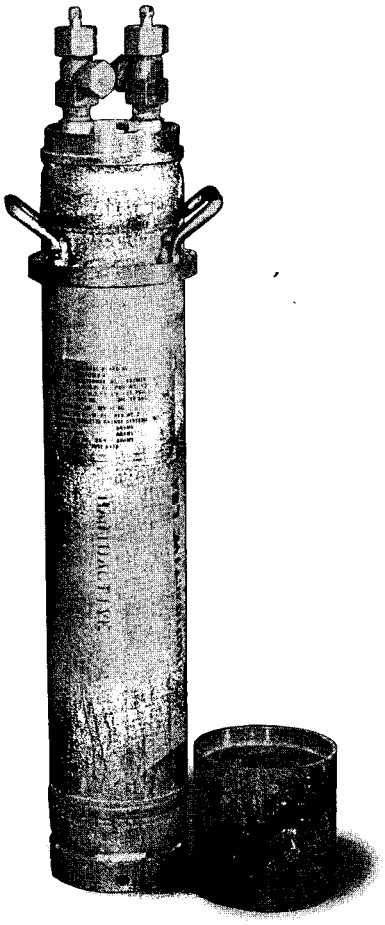

FIGURE 17

Cylinder Models 5A and 5B

6.5 UF_6 Cylinder Model 8A

Nominal Diameter ..... 8 in. (20 cm)
Nominal Length ..... 56 in. (142 cm)
Wall Thickness ..... 3/16 in. (0.5 cm)
Nominal Tare Weight ..... 120 lb (54.43 kg)
Maximum Net Weight ..... 255 lb (115.67 kg)
Nominal Gross Weight .. 375 lb (without cap) (170.1 kg)
Minimum Volume ..... 1.319 ft^3 (37.4 liters)
Basic Material of Construction ..... Monel
Service Pressure ..... 200 psig (1380 kPa gage)
Hydrostatic Test Pressure ..... 400 psig (2760 kPa gage)
Isotopic Content Limit ..... 12.5% ^{235}U (max.)

Valve Used - 3/4-in. valve.

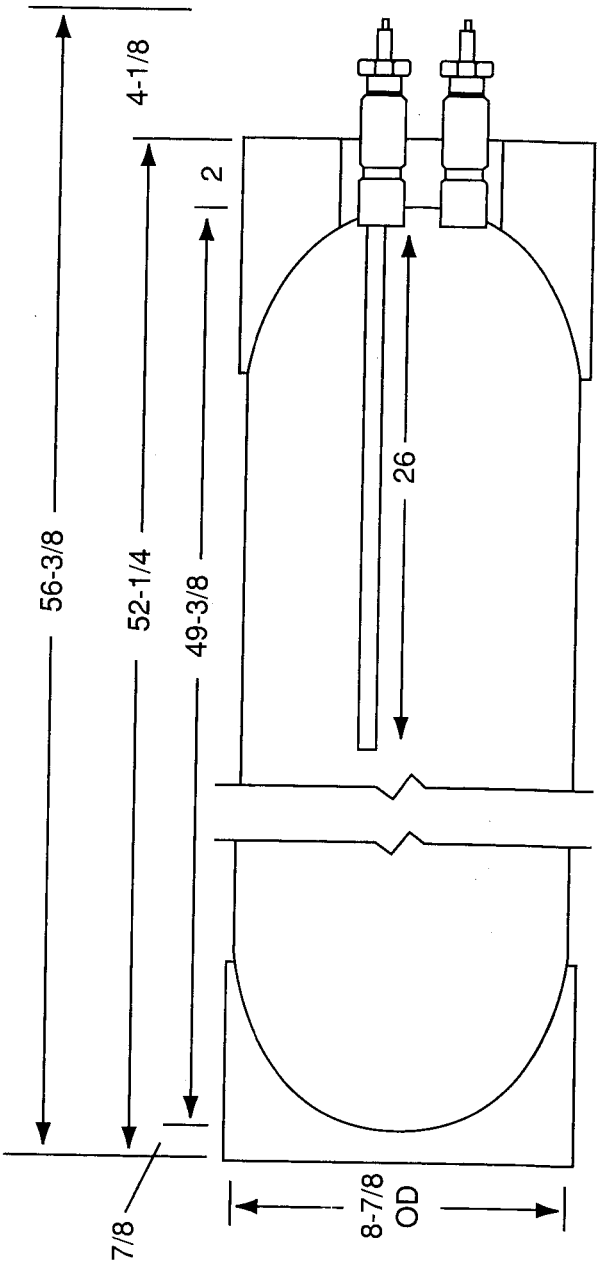

FIGURE 19

Schematic of Cylinder Model 8A

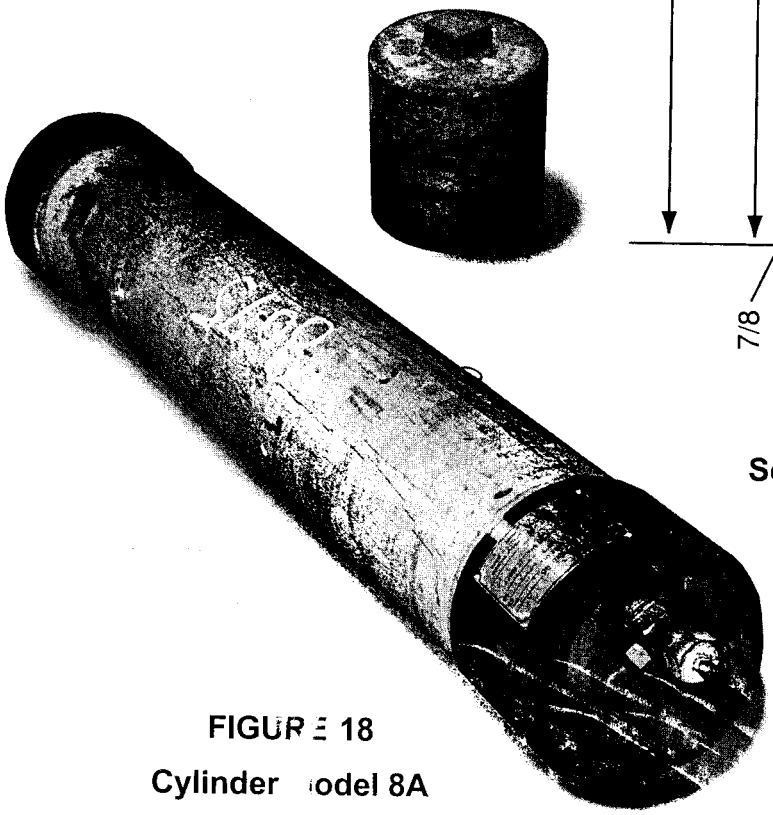

FIGURE 18

Cylinder Model 8A

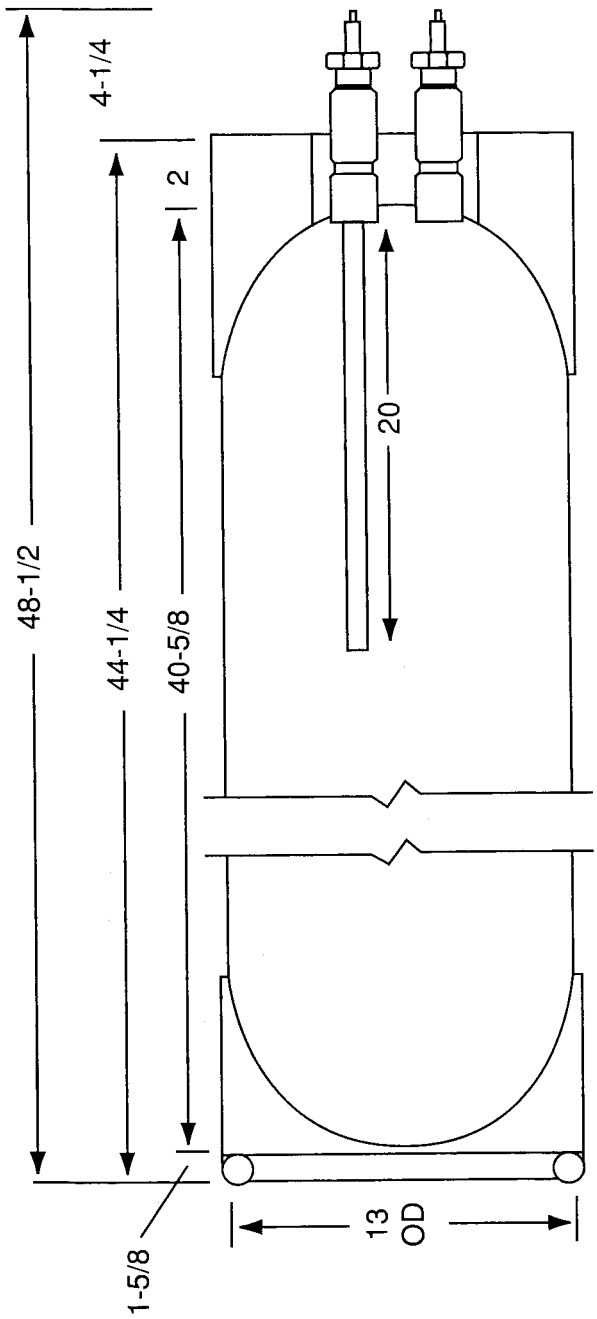

FIGURE 20

Schematic of Cylinder Model 12B

6.6 UF_6 Cylinder Model 12B

Nominal Diameter ..... 12 in. (30.5 cm)
Nominal Length ..... 49.5 in. (126 cm)
Wall Thickness ..... 0.250 in. (0.65 cm)
Nominal Tare Weight ..... 185 lb (84 kg)
Maximum Net Weight ..... 460 lb (208.7 kg)
Nominal Gross Weight .... 645 lb (without cap) (293 kg)
Minimum Volume ..... 2.38 ft^3 (67 liters)
Basic Material of Construction ..... Monel
Service Pressure ..... 200 psig (1380 kPa gage)
Hydrostatic Test Pressure ..... 400 psig (2760 kPa gage)
Isotopic Content Limit ..... 5.0% ^{235}U (maximum)

Valve Used - 3/4-in. valve.

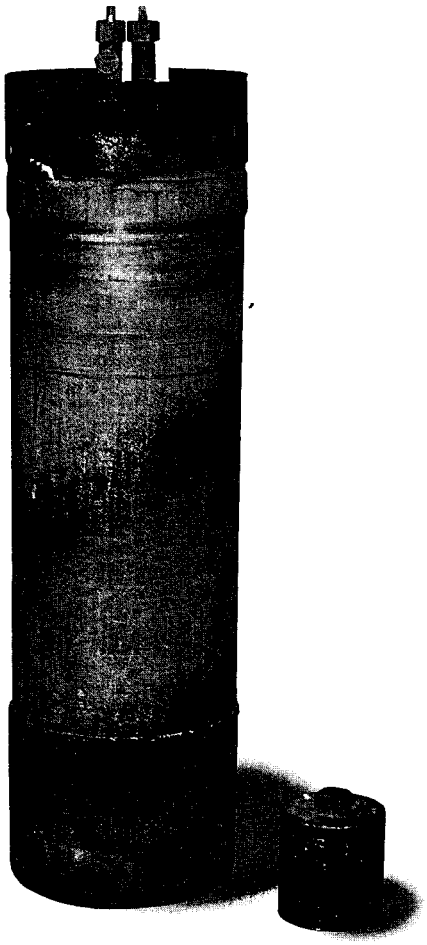

FIGURE 21

Cylinder Model 12B

6.7 UF_6 Cylinder Model 30B

Nominal Diameter ..... 30 in. (76 cm)
Nominal Length ..... 81 in. (206 cm)
Wall Thickness ..... 1/2 in. (1.25 cm)
Nominal Tare Weight ..... 1,400 lb (635 kg)
Maximum Net Weight ..... 5,020 lb (2,277 kg)
Nominal Gross Weight ..... 6,420 lb (2,912 kg)
Minimum Volume ..... 26 ft^3 (736 liters)
Basic Material of Construction ..... Steel (ASTM A-516)
Service Pressure ..... 200 psig (1380 kPa gage)
Hydrostatic Test Pressure ..... 400 psig (2760 kPa gage)
Isotopic Content Limit ..... 5.0% ^{235}U (max. with moderation control)

Valve Used - 1-in. valve.

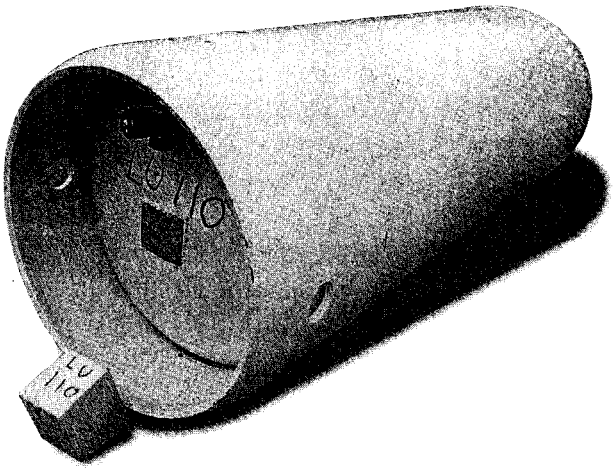

FIGURE 22
Cylinder Model 30B

Note: Primarily used for low enriched UF_6 product.

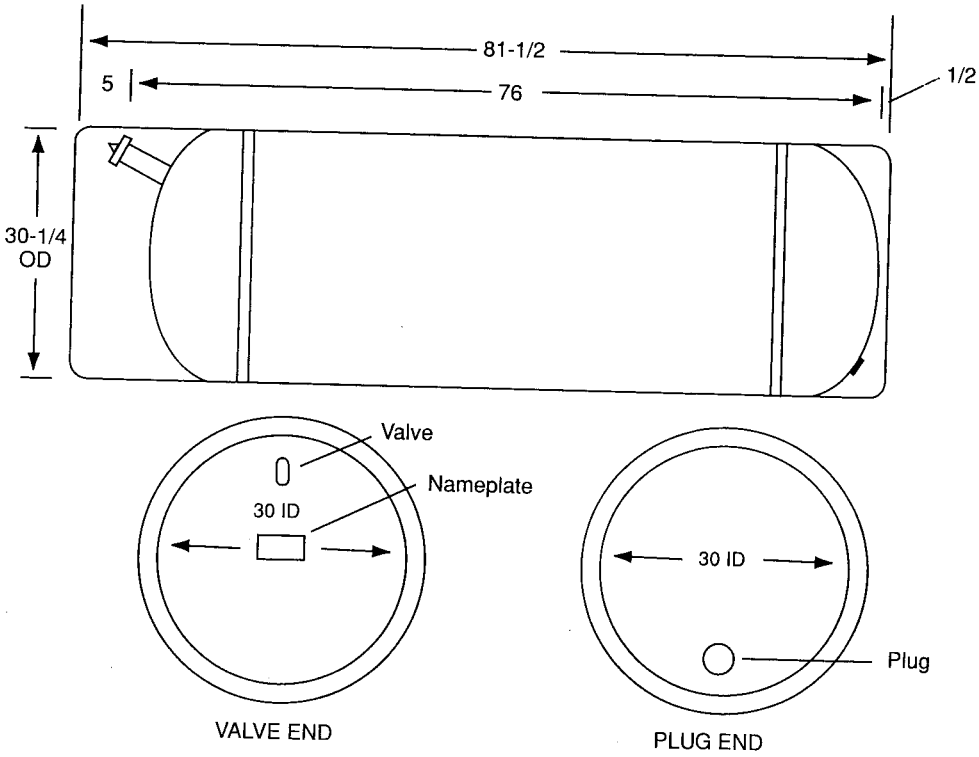

FIGURE 23
Schematic of Cylinder Model 30B

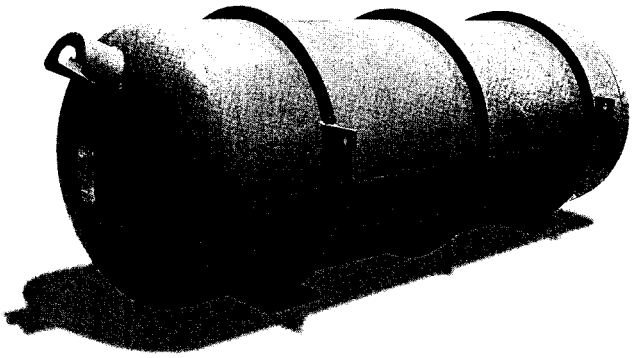

FIGURE 28
Cylinder Model 48G

Note: Primarily used for depleted UF_6 storage. Cylinders with serial numbers below 111821 do not have certified volumes. An earlier design was designated Model OM.

6.10 UF_6 Cylinder Model 48G

Nominal Diameter	48 in. (122 cm)
Nominal Length	146 in. (370 cm)
Nominal Wall Thickness	5/16 in. (0.8 cm)
Nominal Tare Weight	2,600 lb (1,179 kg)
Maximum Net Weight	28,000 lb (12,701 kg)*
Nominal Gross Weight	30,600 lb (13,800 kg)
Minimum Volume	139 ft^3 (3.94 m^3)
Basic Material of Construction	Steel**
Service Pressure	100 psig (690 kPa gage)
Hydrostatic Test Pressure	200 psig (1380 kPa gage)
Isotopic Content Limit	1% ^{235}U

Valve Used - 1-in. valve.

* *Based on 235°F (113°C).*

** *Steel specification changed from A-285 to A-516 for cylinders ordered after 1978.*

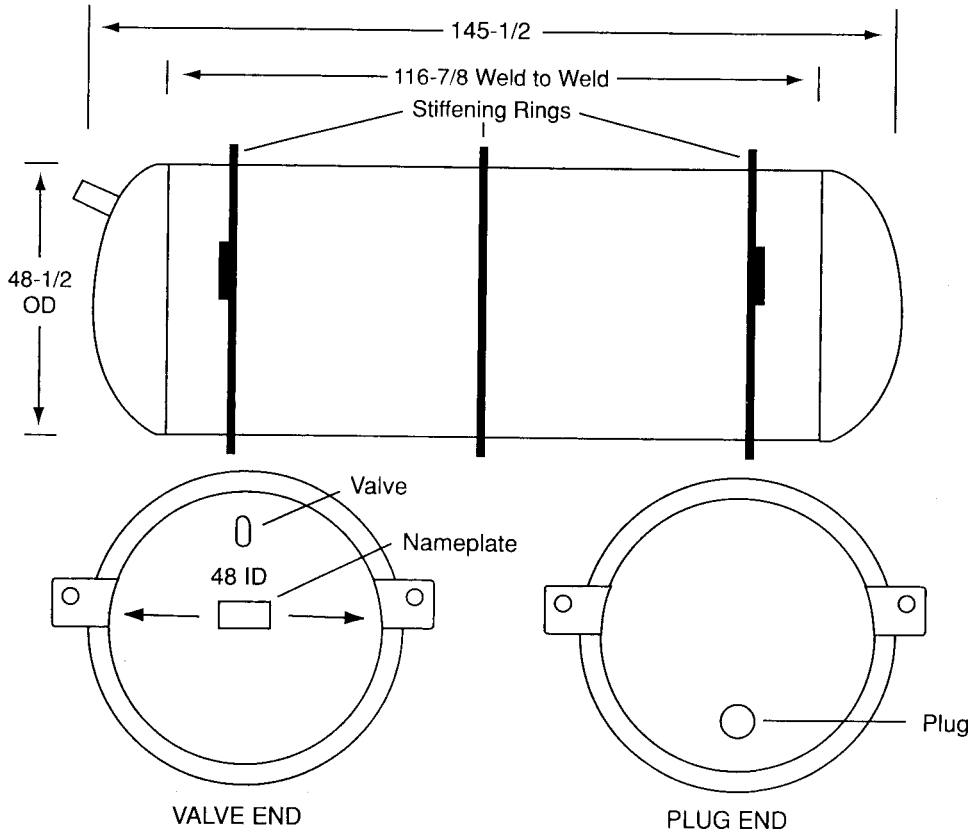

FIGURE 29
Schematic for Cylinder Model 48G

6.11 UF_6 Cylinder Model 48H

Nominal Diameter ..... 48 in. (122 cm)
Nominal Length ..... 146 in. (370 cm)
Nominal Wall Thickness ..... 5/16 in. (0.8 cm)
Nominal Tare Weight ..... 3,170 lb (1,438 kg)
Maximum Net Weight ..... 27,030 lb (12,261 kg)
Nominal Gross Weight ..... 30,200 lb (13,700 kg)
Minimum Volume ..... 140 ft^3 (3.96 m^3)
Basic Material of Construction ..... A-516 Steel
Service Pressure ..... 100 psig (690 kPa gage)
Hydrostatic Test Pressure ..... 200 psig (1380 kPa gage)
Isotopic Content Limit ..... 1% ^{235}U
Valve Used - 1-in. valve.

Note: Primarily used for natural UF_6.

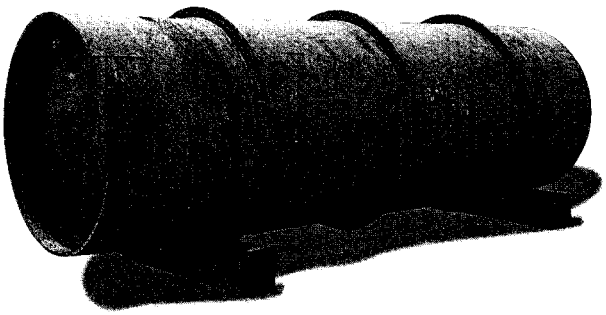

FIGURE 30
Cylinder Model 48H

Note: 48HX cylinders are similar in design but are constructed of A-285 steel.

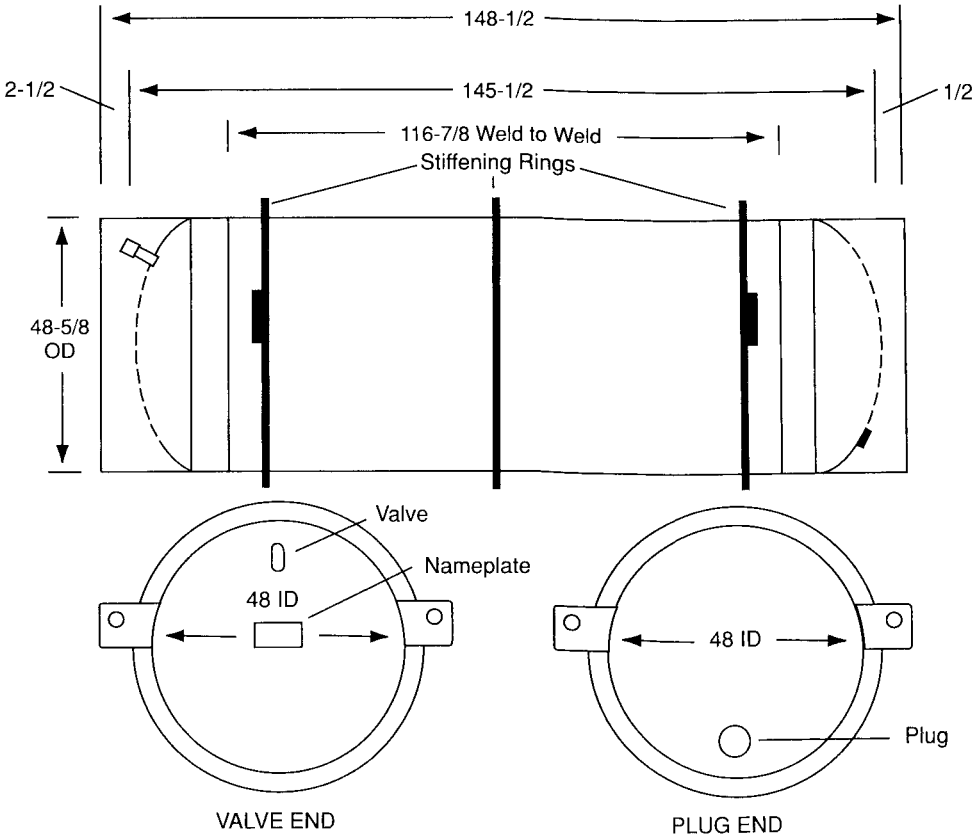

FIGURE 31
Schematic for Cylinder Model 48H