U.S. Department of Transportation
Research and Special Programs Administration

400 Seventh St., S.W.
Washington, D.C. 20590

IAEA CERTIFICATE OF COMPETENT AUTHORITY
SPECIAL FORM RADIOACTIVE MATERIALS
CERTIFICATE NUMBER USA/0356/S, REVISION 9

This certifies that the sources described have been demonstrated to meet the regulatory requirements for special form radioactive material as prescribed in the regulations of the International Atomic Energy Agency[1] and United States of America[2] for the transport of radioactive materials.

1. Source Identification - Isotope Products Laboratories (IPL) Model Nos. A3000, A3015, A3023, A3024, and A3030.

2. Source Description - Cylindrical double encapsulations made of Type 304 or 304L stainless steel (Model Nos. A3000, A3015, A3023, and A3024) or Type 316 stainless steel (Model No. A3030) and fusion welded. Approximate dimensions are 6.4 mm (0.25 in.) in diameter and 15.9 mm (0.625 in.) in length (Model A3000), 6.0 mm (0.236 in.) in diameter and 8.0 mm (0.315 in.) in length (Model A3015), 6.0 mm (0.236 in.) in diameter and 12.0 mm (0.473 in.) in length with one end having an internal 3-48 thread (Model A3023), 6.0 mm (0.236 in.) in diameter and 10.0 mm (0.394 in.) in length (Model A3024), and 12.7 mm (0.5 in.) in diameter and 19.1 mm (0.752 in.) in length (Model A3030). Construction shall be in accordance with attached IPL Drawing Nos. 3000, 3015, 3023, 3024, or 3030.

3. Radioactive Contents - The sources described by this certificate are authorized to contain any one of the following radionuclides in the chemical form identified and limited to the activity shown.

Radionuclide	Form	Activity GBq (Ci)
Na-22	NaCl in gold or ceramic	3.7 (0.10)
Co-57	CoO in ceramic or Co metal plated on Ni foil	11.1 (0.30)
Co-58	CoO in ceramic	11.1 (0.30)
Co-60	CoO in ceramic or 1 mm x 1 mm Ni clad Co	11.1 (0.30)
Ge-68	GeO_2 in silver	1.9 (0.05)
Cs-137	CsCl in gold or Cs in ceramic	11.1 (0.30)
Ba-133	$BaSO_4$ in ceramic	3.7 (0.10)
Ra-226	$RaSO_4$ in gold or ceramic	1.9 (0.05)
Cf-252	Oxide in metal or ceramic	0.037 (0.001)
Actinides*	Oxides in gold or ceramic	1.9 (0.05)

*(Isotopes of Ac, Th, Pa, Np, U, Pu, Am, and Cm only)

4. Quality Assurance - Records of Quality Assurance activities required by Paragraph 310 of the IAEA regulations[1] shall be maintained and made available to the authorized officials for at least three years after the last shipment authorized by this certificate. Consignors and consignees in the United States exporting or importing shipments under this certificate shall satisfy the requirements of Subpart H of 10 CFR 71.

---

[1] "Regulations for the Safe Transport of Radioactive Materials, 1996 Edition (Revised), No. TS-R-1 (ST-1, Revised)," published by the International Atomic Energy Agency (IAEA), Vienna, Austria.

[2] Title 49, Code of Federal Regulations, Parts 100 - 199, United States of America.

CERTIFICATE USA/356/S, REVISION 9

5. Expiration Date - This certificate expires August 31, 2009.

This certificate is issued in accordance with paragraph 804 of the IAEA Regulations and Section 173.476 of Title 49 of the Code of Federal Regulations, in response to the petition and information dated August 6, 2004 submitted by Isotope Products Laboratories, Valencia, CA and in consideration of other information on file in this Office.

Certified by:

AUG 11 2004

Robert A. McGuire
Associate Administrator for
Hazardous Materials Safety

(DATE)

Revision 9 - Issued to extend the expiration date and update drawings.

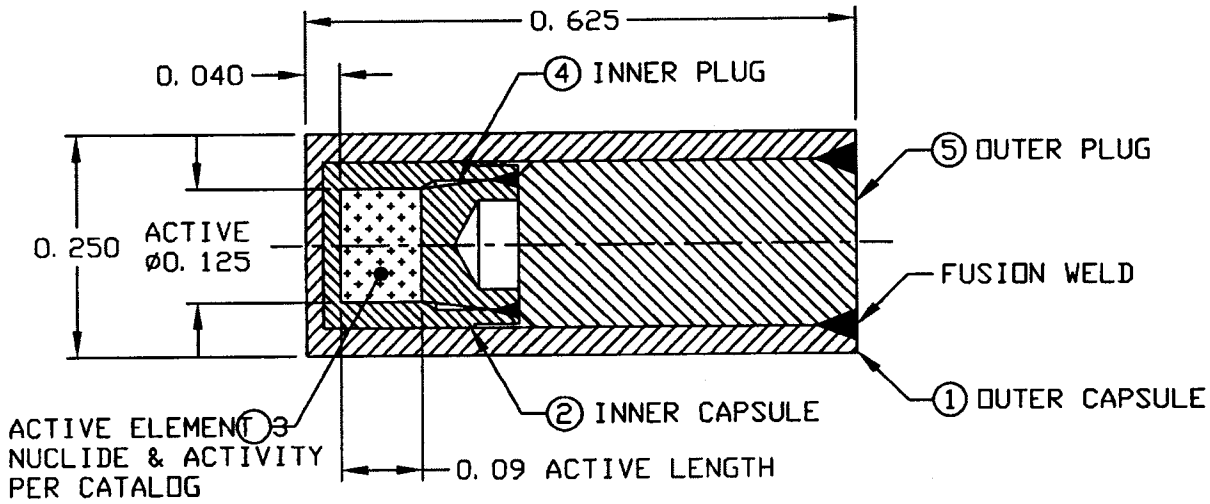

SECTION A-A

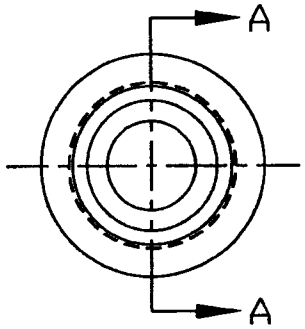

3. IDENTIFY PART NUMBER
2. ALL CAPSULES AND PLUGS ARE MADE FROM 304 OR 304L STAINLESS STEEL AND THE ACTIVE ELEMENT IS CERAMIC
1. ASSEMBLE COMPLETE PER ENGINEERING DRAWING AND FUSION WELD AS REQUIRED

NOTES: UNLESS OTHERWISE SPECIFIED

SECTION A-A

P/N A3000 ASSEMBLY, MODEL 225 POINT SOURCE

Isotope Products Laboratories An Eckert & Ziegler Company VALENCIA, CALIFORNIA 91355	UNLESS OTHERWISE SPECIFIED DIMENSIONS ARE IN INCHES TOLERANCES ON FRACTION ±1/64 · DECIMAL X ±.1 · XX .01 · XXX .002 · ANGLE ±.5° THIRD ANGLE PROJECTION	DESIGN EZ/DI	DRAWING TITLE MODEL 225 POINT SOURCE		
		SCALE NONE	SERIES TITLE INDUSTRIAL SOURCES, HIGH INTENSITY GAMMA AND NEUTRON		
		SIZE A	CAGE CODE 32993	REVISION K	DRAWING NUMBER 3000 · SHEET 3 OF 10

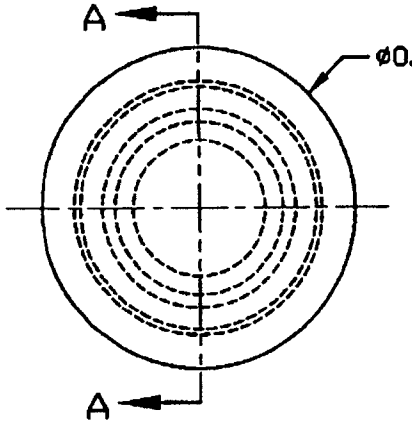

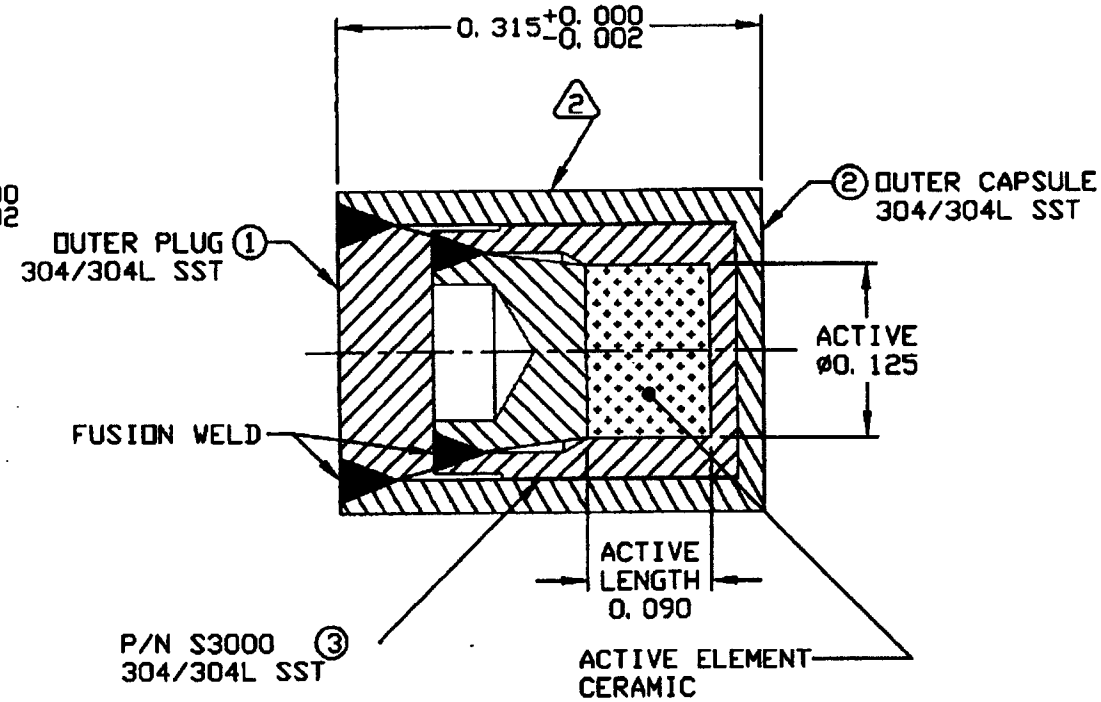

SECTION A-A

3. IDENTIFY PART NUMBER

2 ENGRAVE CHARACTERS 0.060 HIGH x 0.003 DEEP MAXIMUM AS SHOWN:
IPL NUCLIDE ACTIVITY SERIAL NUMBER

1. ASSEMBLE COMPLETE PER ENGINEERING DRAWING AND PER PROCEDURE

NOTES: UNLESS OTHERWISE SPECIFIED

P/N A3015 ASSEMBLY

Isotope Products Laboratories An Eckert & Ziegler Company VALENCIA, CALIFORNIA 91355	UNLESS OTHERWISE SPECIFIED DIMENSIONS ARE IN INCHES TOLERANCES ON FRACTION ±1/64; DECIMAL X ±.1, XX .01, XXX .002; ANGLE ±.5° THIRD ANGLE PROJECTION	DESIGN EZ/DI	DRAWING TITLE SPECIAL 225 CAPSULE, GAMMA POINT SOURCE		
		SCALE NONE	SERIES TITLE INDUSTRIAL SOURCES, HIGH INTENSITY GAMMA AND NEUTRON		
		SIZE A	CAGE CODE 32993	REVISION G	DRAWING NUMBER 3015 / SHEET 3 OF 8

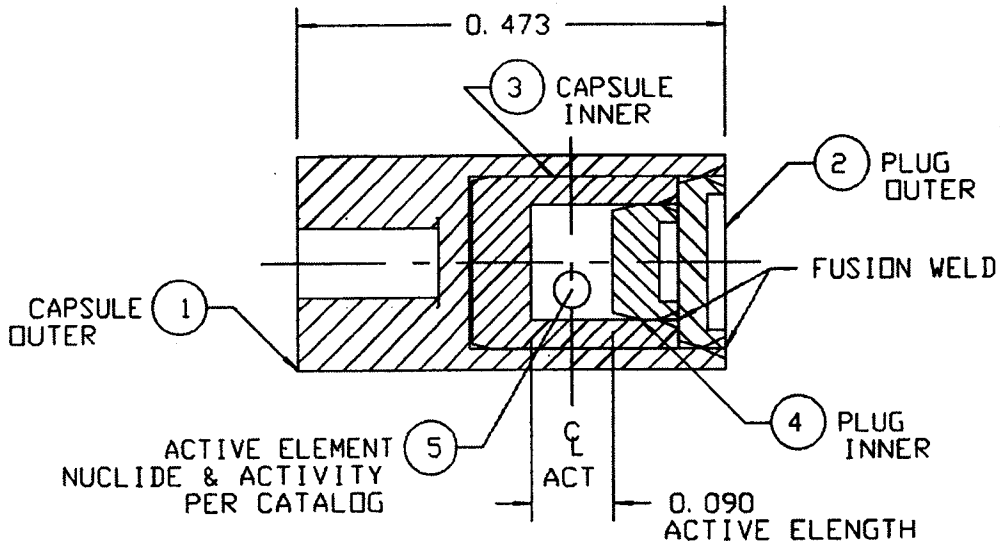

SECTION A-A

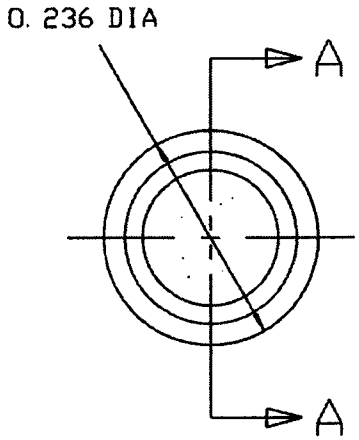

2. IDENTIFY PART NUMBER
1. ASSEMBLE COMPLETE PER ENGINEERING DRAWING AND FUSION WELD AS REQUIRED

NOTE: UNLESS OTHERWISE SPECIFIED

P/N: A3023 ASSEMBLY

ISOTOPE PRODUCTS LABORATORIES BURBANK, CALIFORNIA 91504	UNLESS OTHERWISE SPECIFIED DIMENSIONS ARE IN INCHES TOLERANCES ON FRACTION ±1/64 · DECIMAL X ±.1 XX .01 XXX .002 · ANGLE ±5° THIRD ANGLE PROJECTION	DESIGN JMD/RLT	DRAWING TITLE GAMMA MATRICS		
		SCALE NONE	SERIES TITLE HIGH INTENSITY GAMMA AND NEUTRON SOURCES		
		SIZE A	CAGE CODE 32993	REVISION A	DRAWING NUMBER 3023 · SHEET 3 OF 7

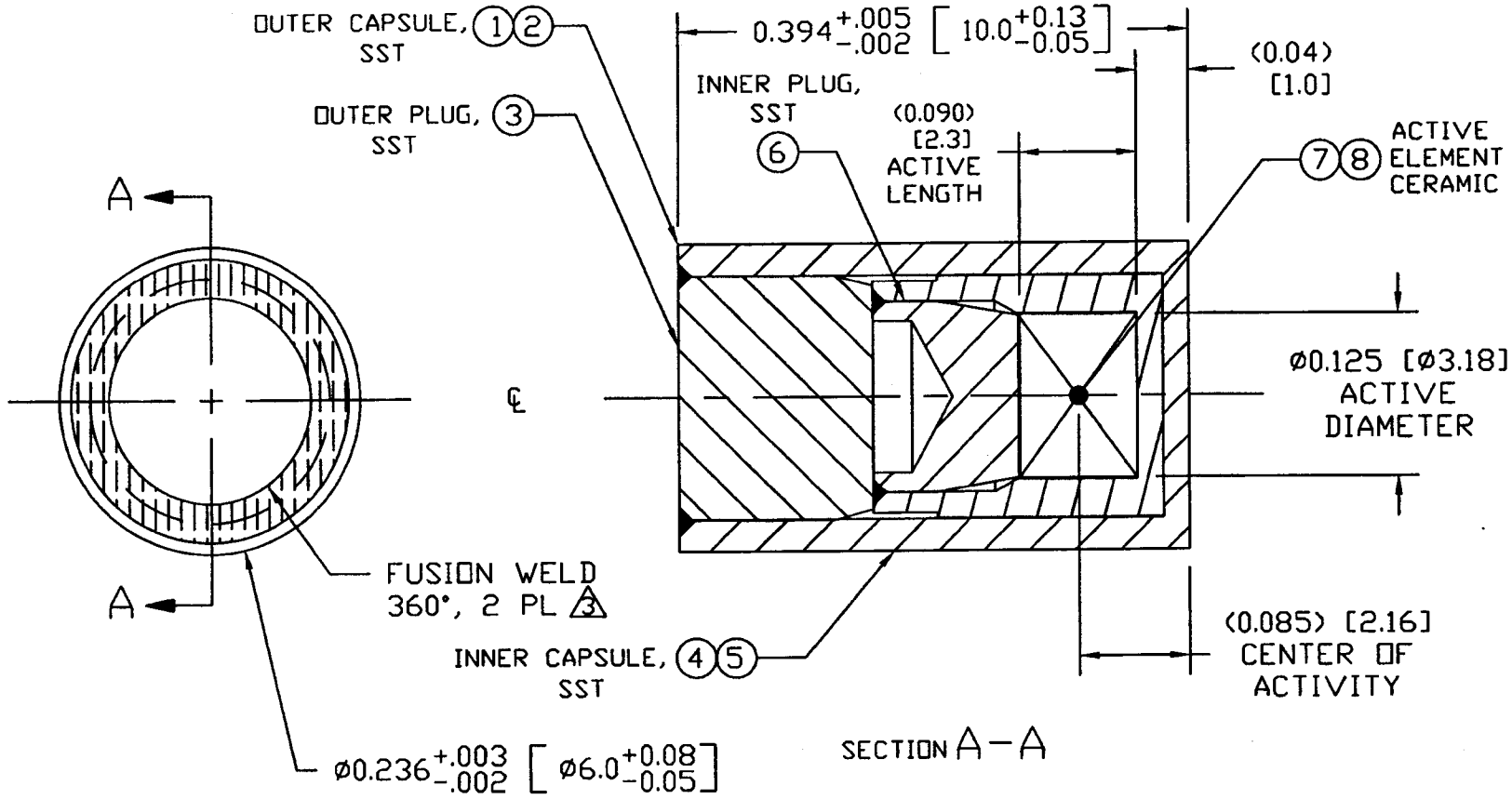

3. FUSION WELD AS REQUIRED 0.015 MINIMUM WELD DEPTH
2. METRIC DIMENSIONS [mm] ARE IN MILLIMETERS.
1. ASSEMBLE PER ENGINEERING DRAWING.

NOTES: UNLESS OTHERWISE SPECIFIED

A3024-1/A3024-3 ASSEMBLY

Isotope Products Laboratories An Eckert & Ziegler Company VALENCIA, CALIFORNIA 91355	UNLESS OTHERWISE SPECIFIED DIMENSIONS ARE IN INCH-SIZES TOLERANCES (UNLESS OTHERWISE SPECIFIED) X.XXX ± .002 INCH X.XX ± .005 INCH X.X ± .03 INCH ANGULAR TOLERANCE OF 0°±30' FRACTIONAL DIMENSIONS ± 1/32 ALL DIMENSIONS ARE FINISHED DIMENSIONS THIRD ANGLE PROJECTION	DRAWN RLT ME/CHECKER LF ENGR RMD SCALE NONE	TITLE HEG SOURCE, 1 cm LENGTH TROXLER DRAWING NO. 3024 SIZE A SERIES TITLE INDUSTRIAL SOURCES, HIGH INTENSITY GAMMA AND NEUTRON	REV D SHEET 4 OF 8

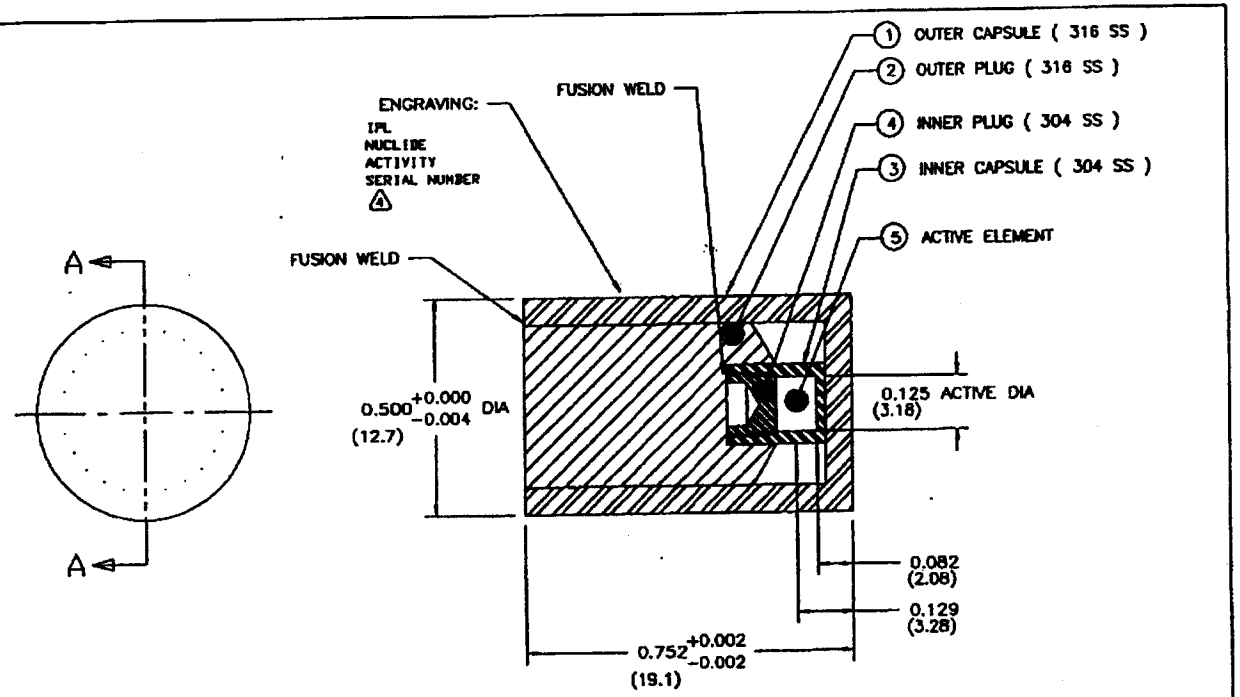

P/N: A3030 ASSEMBLY

SECTION A-A

5. INDIVIDUALLY PACKAGE AND IDENTIFY PART NUMBER THEREON

4 ENGRAVE CHARACTERS 0.060 HIGH x 0.003 DEEP MAX AS SHOWN (BLACK FILL)
IPL
NUCLIDE
ACTIVITY
SERIAL NUMBER

4. TOLERANCES:
INCH: 0.XXX 0.002, 0.XX 0.01, 0.X 0.1, ANGLE 0.5 ± :
MM: 0.XXX 0.050, 0.XX 0.25, 0.X 2.5, ANGLE 0.5 ± :
3. DIMENSIONS ARE IN INCHES
2. ( ) DIMENSIONS ARE IN MILLIMETERS
1. ASSEMBLE COMPLETE PER ENGINEERING DRAWING AND FUSION WELD AS REQUIRED

NOTE: UNLESS OTHERWISE SPECIFIED

ISOTOPE PRODUCTS LABORATORIES
BURBANK, CALIFORNIA 91504

SCALE: NTS	APPROVED:	DESIGNED: JMD/RLT
DATE: 06/05/95		REV/CHG: -
TITLE: WIDE FIELD GAMMA GAUGE SOURCE		SHEET: 3 OF 5
SERIES: HIGH INTENSITY GAMMA & NEUTRON SOURCES (HEG SERIES CAPSULES 193, 225 & N-252)		DRAWING NUMBER: 3030