U.S. Department of Transportation
Research and Special Programs Administration

400 Seventh St., S.W.
Washington, D.C. 20590

IAEA CERTIFICATE OF COMPETENT AUTHORITY
SPECIAL FORM RADIOACTIVE MATERIALS
CERTIFICATE NUMBER USA/0353/S, REVISION 5

This certifies that the source described has been demonstrated to meet the regulatory requirements for special form radioactive material as prescribed in the regulations of the International Atomic Energy Agency[1] and United States of America[2] for the transport of radioactive materials.

1. Source Identification - Isotope Products Laboratories (IPL) Model No. 193.

2. Source Description - Cylindrical double encapsulation with a hexagonal and cylindrical extension made of Type 304 or 304L stainless steel and fusion seal welded. Approximate exterior dimensions are 9.53 mm (0.375 in.) maximum diameter and 36.5 mm (1.437 in.) in length. Construction shall be in accordance with attached IPL Drawing No. 3011, sheet 3 of 11, dated 09/03/93.

3. Radioactive Contents - The source described by this certificate is authorized to contain any one of the following radionuclides in the chemical form identified and limited to the activity shown.

Radionuclide	Form	Activity
Na-22	NaCl in gold or ceramic	3.7 GBq (0.10 Ci)
Co-57	Co metal plated on Ni foil or $CoCl_2$ in ceramic	11.1 GBq (0.30 Ci)
Co-58	$CoCl_2$ in ceramic	11.1 GBq (0.30 Ci)
Co-60	Ni clad Co pellets or $CoCl_2$ in ceramic	11.1 GBq (0.30 Ci)
Ge-68	GeO_2 in silver or ceramic	1.85 GBq (0.05 Ci)
Ba-133	$BaSO_4$ or $BaCl_2$ in ceramic	3.7 GBq (0.10 Ci)
Cs-137	CsCl in gold or ceramic	11.1 GBq (0.30 Ci)
Eu-152	$Eu(NO_3)_3$ or Eu_2O_3 in ceramic	0.74 GBq (0.02 Ci)
Ra-226	Sintered $RaSO_4$ in platinum sheath	1.85 GBq (0.05 Ci)
Actinides*	Oxides in gold or ceramic	1.85 GBq (0.05 Ci)

* (Isotopes of Ac, Th, Pa, Np, U, Pu, Am, and Cm)

4. Quality Assurance - Records of Quality Assurance activities required by Paragraph 310 of the IAEA regulations[1] shall be maintained and made available to the authorized officials for at least three years after the last shipment authorized by this certificate. Consignors and consignees in the United States exporting or importing shipments under this certificate shall satisfy the requirements of Subpart H of 10 CFR 71.

5. Expiration Date - This certificate expires October 31, 2009.

---

[1] "Regulations for the Safe Transport of Radioactive Materials, 1996 Edition (Revised), No. TS-R-1 (ST-1, Revised)," published by the International Atomic Energy Agency (IAEA), Vienna, Austria.

[2] Title 49, Code of Federal Regulations, Parts 100 - 199, United States of America.

CERTIFICATE USA/353/S, REVISION 5

This certificate is issued in accordance with paragraph 804 of the IAEA Regulations and Section 173.476 of Title 49 of the Code of Federal Regulations, in response to the petition and information dated August 16, 2004 submitted by Isotope Products Laboratories, Valencia, CA and in consideration of other information on file in this Office.

Certified by:

Robert A. McGuire
Associate Administrator
for Hazardous Materials Safety

OCT - 8 2004
(DATE)

Revision 5 - Issued to add Eu-152 to the authorized contents and to extend the expiration date.

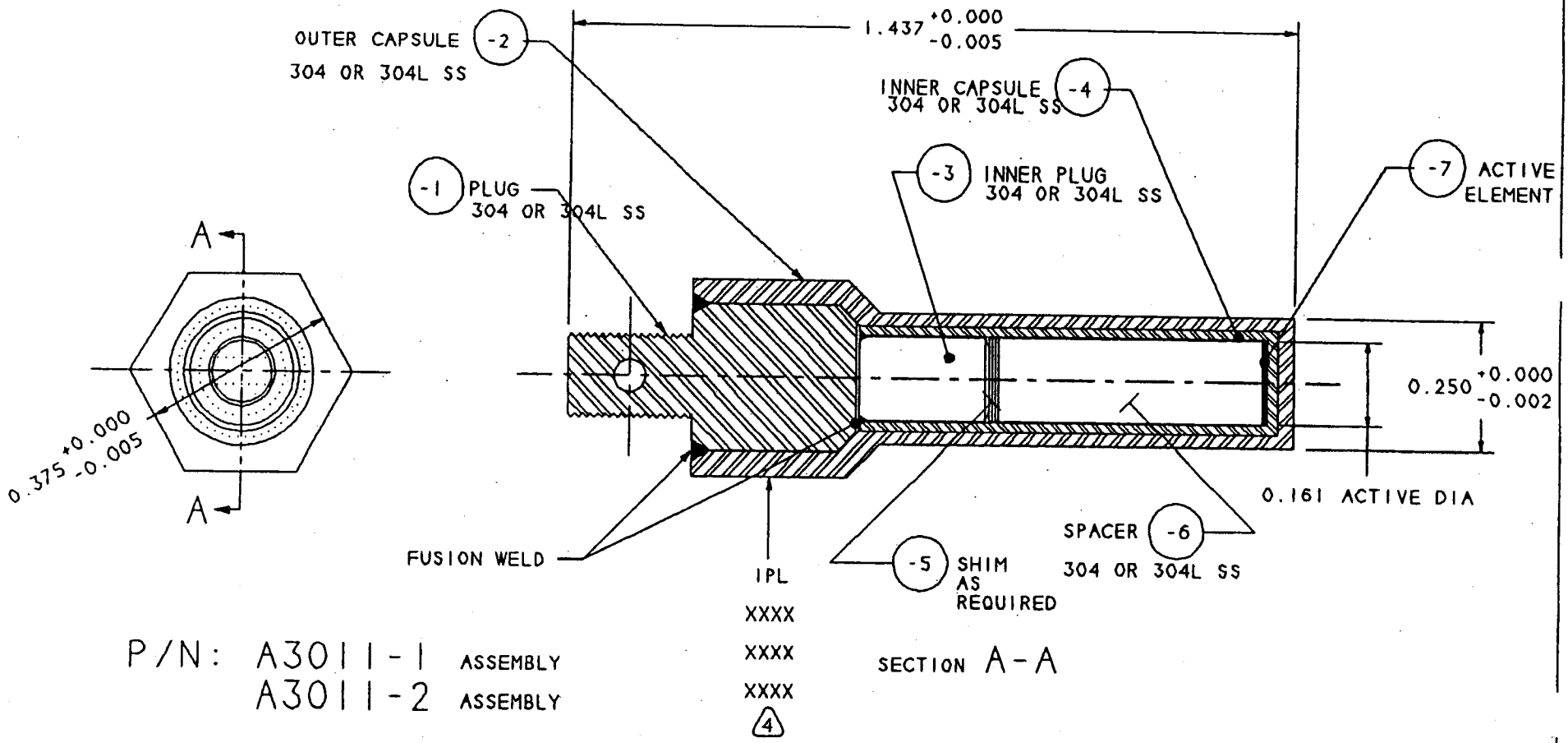

P/N: A3011-1 ASSEMBLY
A3011-2 ASSEMBLY

5. PACKAGE AND IDENTIFY PART NUMBER THEREON
4. ENGRAVE CHARACTERS 0.060 HIGH x 0.003 DEEP MAX ON CIRCUMFERENCE AND BLACK FILL:
   IPL
   ISOTOPE
   ACTIVITY
   SERIAL NUMBER

---

3. TOLERANCES: 0.XXX ±0.002, 0.XX ±0.01, 0.X ±0.1, ANGLE ±0.5°
2. DIMENSIONS ARE IN INCHES
1. ASSEMBLE COMPLETE PER ENGINEERING DRAWING AND FUSION WELD AS REQUIRED

NOTE: UNLESS OTHERWISE SPECIFIED

THIS DRAWING IS THE PROPERTY OF ISOTOPE PRODUCTS LABORATORIES, AND MAY NOT BE USED, REPRODUCED, PUBLISHED OR DISCLOSED TO OTHERS WITHOUT EXPRESS AUTHORIZATION BY ISOTOPE PRODUCTS LABORATORIES.

ISOTOPE PRODUCTS LABORATORIES
BURBANK, CALIFORNIA 91504

SCALE: NTS	APPROVED: Michael Devin 8/8/94	DESIGNED: JMD/RLT
DATE: 09/03/93		REV/CHG: D
TITLE: HIGH INTENSITY GAMMA SOURCE - MODEL HEG		SHEET: 3 OF 11
SERIES: HIGH INTENSITY GAMMA AND NEUTRON SOURCES		DRAWING NUMBER 3011