U.S. Department
of Transportation
**Research and
Special Programs
Administration**

400 Seventh St., S.W.
Washington, D.C. 20590

**IAEA CERTIFICATE OF COMPETENT AUTHORITY
SPECIAL FORM RADIOACTIVE MATERIALS
CERTIFICATE NUMBER USA/0351/S, REVISION 5**

This certifies that the source described has been demonstrated to meet the regulatory requirements for special form radioactive material as prescribed in the regulations of the International Atomic Energy Agency[1] and United States of America[2] for the transport of radioactive materials.

1. Source Identification - Isotope Products Laboratories (IPL) Model N-252.

2. Source Description - Cylindrical double encapsulation made of Type 304 or 304L stainless steel and fusion welded. Approximate outer dimensions are 9.4 mm (0.37 in.) in diameter and 32.5 mm (1.28 in.) in length. A threaded stud measuring 5.08 mm (0.2 in.) long maximum is located at the center of the end opposite the weldment. Construction shall be in accordance with attached Isotope Products Laboratories Drawing Nos. 3014, Rev. H or A3004, Rev. A.

3. Radioactive Contents - No more than 185.0 MBq (5.0 mCi) of Californium-252. The Cf-252 is in the form of Cf_2O_3 in aluminum, ceramic, or palladium metal.

4. Quality Assurance - Records of Quality Assurance activities required by paragraph 310 of the IAEA regulations[1] shall be maintained and made available to the authorized officials for at least three years after the last shipment authorized by this certificate. Consignors and consignees in the United States exporting or importing shipments under this certificate shall satisfy the requirements of Subpart H of 10 CFR 71.

5. Expiration Date - This certificate expires on February 28, 2010.

This certificate is issued in accordance with paragraph 804 of the IAEA Regulations and Section 173.476 of Title 49 of the Code of Federal Regulations, in response to the petition and information dated December 20, 2004 and February 7, 2005 submitted by Isotope Products Laboratories, Valencia, CA, and in consideration of other information on file in this Office.

Certified by:

Robert A. McGuire
Associate Administrator for
Hazardous Materials Safety

FEB 28 2005
(DATE)

Revision 5 - Issued to extend the expiration date.

---

[1] "Regulations for the Safe Transport of Radioactive Materials, 1996 Edition (Revised)", No. TS-R-1 (ST-1, Revised)," published by the International Atomic Energy Agency (IAEA), Vienna, Austria.

[2] Title 49, Code of Federal Regulations, Parts 100 - 199, United States of America.

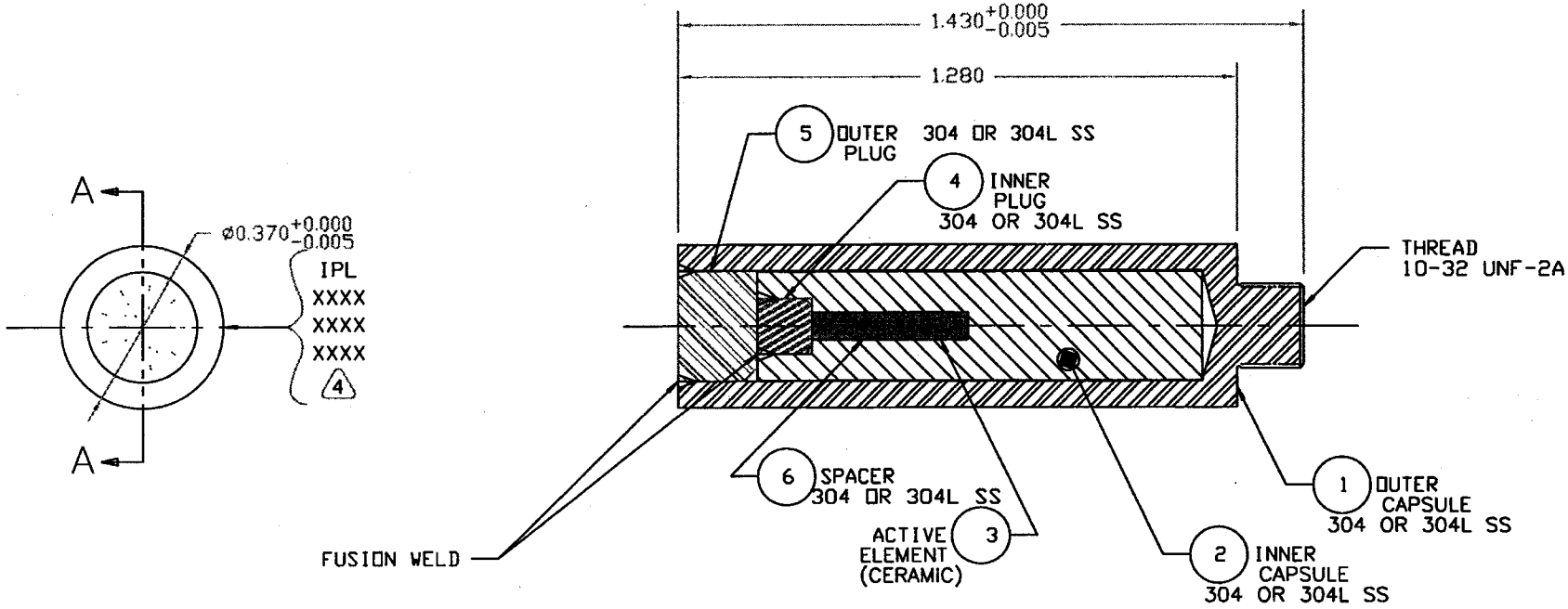

SECTION A-A

5. INDIVIDUALLY PACKAGE AND IDENTIFY PART NUMBER THEREON

4 ENGRAVE CHARACTERS 0.060 HIGH x 0.003 DEEP MAX AS SHOWN: (BLACK FILL)
IPL
NUCLIDE
ACTIVITY
SERIAL NUMBER

---

3. TOLERANCES: 0.XXX ±0.002, 0.XX ±0.01, 0.X ±0.1, ANGLE ±0.5°
2. DIMENSIONS ARE IN INCHES
1. ASSEMBLE COMPLETE PER ENGINEERING DRAWING AND FUSION WELD AS REQUIRED

NOTE: UNLESS OTHERWISE SPECIFIED

THIS DRAWING IS THE PROPERTY OF ISOTOPE PRODUCTS LABORATORIES, AND MAY NOT BE USED, REPRODUCED, PUBLISHED OR DISCLOSED TO OTHERS WITHOUT EXPRESS AUTHORIZATION BY ISOTOPE PRODUCTS LABORATORIES.

P/N: A3014 ASSEMBLY, NEUTRON SOURCE

ISOTOPE PRODUCTS LABORATORIES
BURBANK, CALIFORNIA 91504

SCALE: NTS	APPROVED: LF	DESIGNED: JMD/RLT
DATE: 05/16/88		REV/CHG: H
TITLE: NEUTRON SOURCE		SHEET: 3 OF 8
SERIES: HIGH INTENSITY GAMMA AND NEUTRON SOURCE (HEG SERIES CAPSULES 193, 225 & N-252)		DRAWING NUMBER 3014

INDIVIDUALLY PACKAGE
ASSEMBLY

ACTUAL SIZE

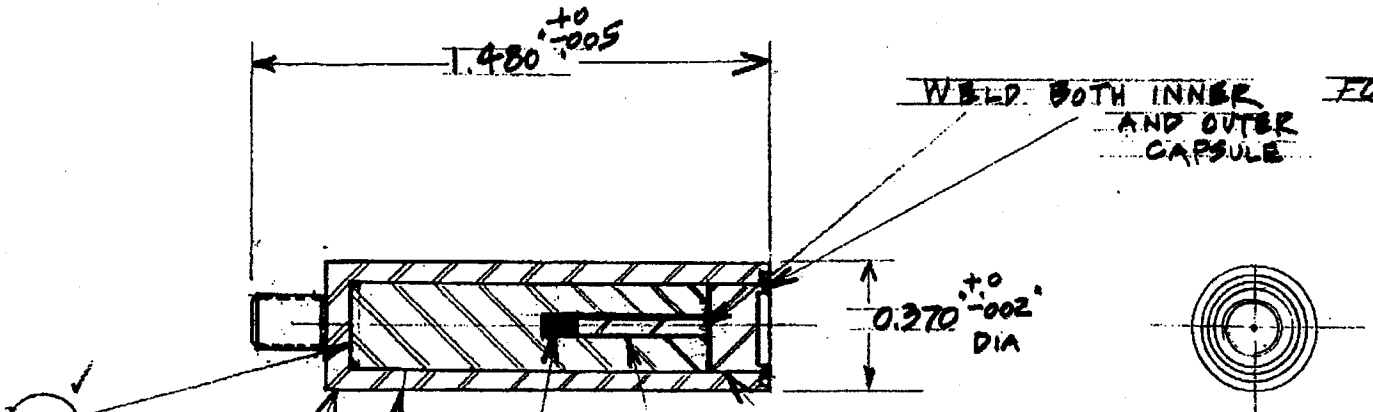

ENGRAVE
IPL
ISOTOPE
ACTIVITY
SOURCE NO

ANSI 43333 SPECIAL FORM

ISOTOPE PRODUCTS LAB

APPROVED BY	DATE
ENG. ERW	11-21-86
QUALITY ASSURANCE	12-2-86
PRODUCTION JJC	12/2/86

ISOTOPE PRODUCTS LABORATORIES

BURBANK, CALIFORNIA 91504

SCALE: 2 to 1	APPROVED BY:	DRAWN BY E.W.
DATE: NOV 20, 86		REVISED A 9/15/88

NEUTRON SOURCE
MODEL SR-CF-100 (CURRENTLY MODEL N-252)

HIGH INTENSITY GAMMA AND NEUTRON SOURCES

DRAWING NUMBER A3004