U.S. Department
of Transportation
**Pipeline and
Hazardous Materials
Safety Administration**

**400 Seventh Street, S.W.
Washington, D.C. 20590**

**IAEA CERTIFICATE OF COMPETENT AUTHORITY
SPECIAL FORM RADIOACTIVE MATERIALS
CERTIFICATE NUMBER USA/0221/S, REVISION 7**

This certifies that the sources described have been demonstrated to meet the regulatory requirements for special form radioactive material as prescribed in the regulations of the International Atomic Energy Agency[1] and United States of America[2] for the transport of radioactive materials.

1. Source Identification - Isotope Products Laboratories (IPL) Line Source Model 301 Series.

2. Source Description - Cylindrical double encapsulations made of either Type 304 or 304L stainless steel and fusion welded. Approximate outer dimensions are 3.0 mm (0.12 in.) in diameter and 25.4 mm (1.0 in.) to 838.2 mm (33.0 in.) in length. Construction shall be in accordance with attached Isotope Product Laboratories Drawing No. 3402, Sheet 4 of 10, Rev/Chg L.

3. Radioactive Contents - The sources described by this certificate are authorized to contain up to 11.1 GBq (0.30 Ci) of any one of the following radionuclides in the chemical form identified.

Radionuclide	Form
Sodium-22	NaCl in ceramic
Cobalt-57	$CoCl_2$ in ceramic
Cobalt-60	$CoCl_2$ in ceramic
Germanium-68	GeO in ceramic
Barium-133	$BaCl_2$ in ceramic
Cesium-137	CsCl in ceramic
Europium-152	$EuCl_3$ in ceramic
Europium-154	$EuCl_3$ in ceramic
Europium-155	$EuCl_3$ in ceramic
Gadolinium-153	$GdCl_3$ in ceramic
Americium-241	AmO_2 in ceramic

4. Quality Assurance - Records of Quality Assurance activities required by Paragraph 310 of the IAEA regulations[1] shall be maintained and made available to the authorized officials for at least three years after the last shipment authorized by this certificate. Consignors and consignees in the United States exporting or importing shipments under this certificate shall satisfy the requirements of Subpart H of 10 CFR 71.

---

[1] "Regulations for the Safe Transport of Radioactive Materials, 1996 Edition (Revised), No. TS-R-1 (ST-1, Revised)," published by the International Atomic Energy Agency (IAEA), Vienna, Austria.

[2] Title 49, Code of Federal Regulations, Parts 100 - 199, United States of America.

CERTIFICATE USA/0221/S, REVISION 7

5. Expiration Date - This certificate expires June 30, 2010.

This certificate is issued in accordance with paragraph 804 of the IAEA Regulations and Section 173.476 of Title 49 of the Code of Federal Regulations, in response to the petition and information dated August 10, 2004, February 25, 2005 and June 15, 2005 submitted by Isotope Products Laboratories, Valencia, CA and in consideration of other information on file in this Office.

Certified by:

JUN 21 2005

Robert A. McGuire
Associate Administrator for
Hazardous Materials Safety

(DATE)

Revision 7 - Issued to extend the expiration date and update drawings.

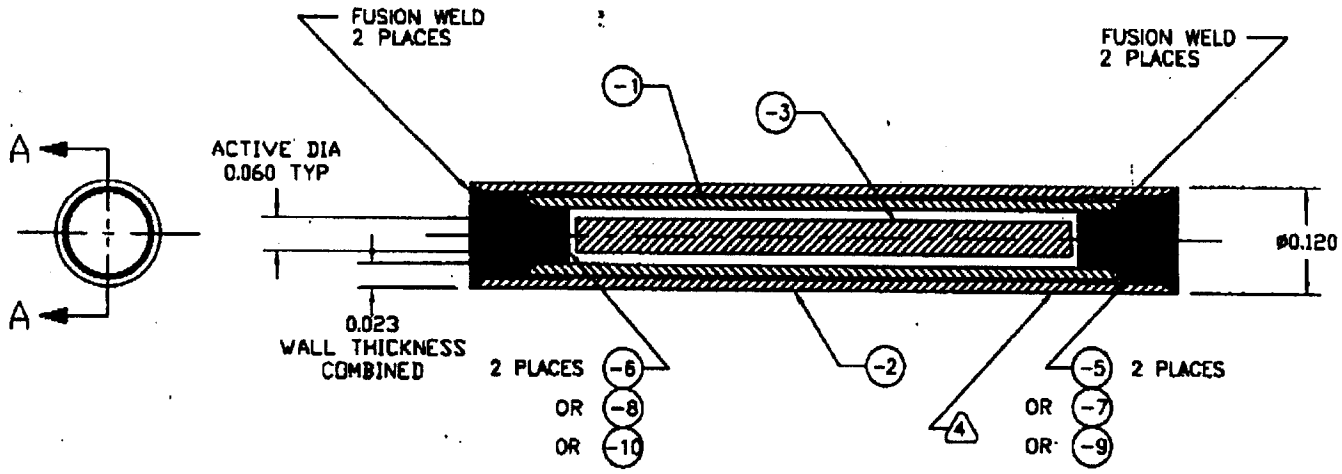

SECTION A–A

P/N:	PLUG LENGTH	TOTAL LENGTH	ACTIVE LENGTH
A3402-AXXXXX	0.040	XX.XXX+0.160	XX.XXX
A3402-BXXXXX	0.0625	XX.XXX+0.250	XX.XXX
A3402-CXXXXX	0.125	XX.XXX+0.500	XX.XXX
A3402-DXXXXX	0.098	XX.XXX+0.392	XX.XXX

6. CAPSULE COMPONENTS ARE 304 OR 304L STAINLESS STEEL. ACTIVE ELEMENT IS CERAMIC.
5. PACKAGE AND IDENTIFY PART NUMBER THEREON
4. ENGRAVE CHARACTERS 0.060 HIGH x 0.003 DEEP MAX ON CIRCUMFERENCE OF 3402-2 0.500" MIN FROM END:
   IPL
   NUCLIDE
   ACTIVITY
   SERIAL NUMBER

---

3. TOLERANCES: 0.XXX ±0.002, 0.XX ±0.01, 0.X ±0.1, ANGLE ±0.5°
2. DIMENSIONS ARE IN INCHES
1. ASSEMBLE COMPLETE PER ENGINEERING DRAWING
   PRESS FIT PLUGS INTO TUBES
   AND FUSION WELD IN PLACE

NOTE: UNLESS OTHERWISE SPECIFIED

ISOTOPE PRODUCTS LABORATORIES
BURBANK, CALIFORNIA 91504

SCALE: NTS	APPROVED: MD/GG/LF	DESIGNED: MG/DI
DATE: 05/17/94		REV/CHG: L
TITLE: DOUBLE ENCAPSULATED LINE SOURCE (301B)		SHEET: 4 OF 10
SERIES: LINE SOURCES		DRAWING NUMBER 3402