U.S. Department
of Transportation

Pipeline and
Hazardous Materials
Safety Administration

1200 New Jersey Ave. S.E.
Washington, D.C. 20590

**COMPETENT AUTHORITY CERTIFICATION**
**FOR A TYPE B(U)**
**RADIOACTIVE MATERIALS PACKAGE DESIGN**
**CERTIFICATE USA/0214/B(U), REVISION 14**

**REVALIDATION OF CANADIAN COMPETENT AUTHORITY CERTIFICATE CDN/2045/B(U)**

This certifies that the radioactive materials package design described below is hereby approved for use within the United States for import and export shipments only. Shipments must be made in accordance with the applicable regulations of the International Atomic Energy Agency[1] and the United States of America[2].

1. Package Identification - MDS Nordion F-168-X Shipping Flask, Serial Nos. 22-X, 23-X, 24-X, 25-X. 26-X, 41-X.

2. Packaging Description and Authorized Radioactive Contents - as described in Canadian Certificate of Competent Authority CDN/2045/B(U), Revision 17 (attached).

3. General Conditions -

   a. Each user of this certificate must have in his possession a copy of this certificate and all documents necessary to properly prepare the package for transportation. The user shall prepare the package for shipment in accordance with the documentation and applicable regulations.

   b. Each user of this certificate, other than the original petitioner, shall register his identity in writing to the Office of Hazardous Materials Technology (PHH-23), Pipeline and Hazardous Materials Safety Administration, U.S. Department of Transportation, Washington, D.C. 20590-0001.

   c. This certificate does not relieve any consignor or carrier from compliance with any requirement of the Government of any country through or into which the package is to be transported.

4. Marking and Labeling - The package shall bear the marking USA/0214/B(U) in addition to other required markings and labeling.

5. Expiration Date - This certificate expires on April 30, 2012.

---

[1] "Regulations for the Safe Transport of Radioactive Material, 1996 Edition (Revised), No. TS-R-1 (ST-1, Revised)," published by the International Atomic Energy Agency (IAEA), Vienna, Austria.

[2] Title 49, Code of Federal Regulations, Parts 100-199, United States of America.

**CERTIFICATE USA/0214/B(U), REVISION 14**

This certificate is issued in accordance with paragraph 816 of the IAEA Regulations[1] and Section 173.473 of Title 49 of the Code of Federal Regulations[2], in response to the petition and information dated February 11, 2008 submitted by MDS Nordion, Kanata, Canada and in consideration of other information on file in this Office.

Certified by:

Bob Richard
Deputy Associate Administrator for Hazardous Materials Safety

MAR 18 2008
(DATE)

Revision 14 - Issued to revalidate Canadian Certificate of Competent Authority No. CDN/2045/B(U), Revision 17, and to extend the expiration date.

| Canadian Certificate No. | Issue Date | Expiry Date | CNSC File |
|---|---|---|---|
| **CDN/2045/B(U) (Rev. 17)** | **Feb-06-2008** | **Apr-30-2012** | **30-A2-94-1** |

# Certificate
## for
## Transport Package Design

The transport package design identified below is certified by the Canadian Nuclear Safety Commission pursuant to paragraph 21(1)(h) of the *Nuclear Safety and Control Act* and Section 7 of the *Packaging and Transport of Nuclear Substances Regulations*, and to the 1973 Revised Edition (as amended) of the IAEA *Regulations for the Safe Transport of Radioactive Material.*

## REGISTRATION OF USE OF PACKAGES

All users of this authorization shall register their identity in writing with the Canadian Nuclear Safety Commission prior to the first use of this authorization and shall certify that they possess the instructions necessary for preparation of the package for shipment.

## PACKAGE IDENTIFICATION

Designer: **MDS Nordion**
Make/Model: **F-168-X Shipping Flask, Serial Nos. 22-X, 23-X, 24-X, 25-X, 26-X, 41-X**
Mode of Transport: **Air, Sea, Road, Rail**

## IDENTIFICATION MARK

The package shall bear the competent authority identification mark **"CDN/2045/B(U)"**.

## PACKAGE DESCRIPTION

The F-168-X package, as shown on MDS Nordion Drawing Nos. F116801-100, (Rev. F) and F116801-101, (Rev. J), consists of a lead filled (266 mm lead shielding) steel encased right cylinder with external fins, insulated steel flame shields on the top and side and steel covered insulation on the bottom. The package is permanently mounted on a structural steel base. The containment system is the source assembly.

An illustration of the package is shown on attached Drawing No. F-168-X, (Rev. 6).

The configuration of the package is as follows:

Shape: **Cylinder**
Mass: **5445 kg**
Length: **1372 mm**
Width: **1372 mm**

Shielding: **Lead**
Outer Casing: **Steel**
Height: **1659 mm**
Diameter: **1013 mm**

| Canadian Certificate No. | Issue Date | Expiry Date | CNSC File |
|---|---|---|---|
| **CDN/2045/B(U) (Rev. 17)** | **Feb-06-2008** | **Apr-30-2012** | **30-A2-94-1** |

## AUTHORIZED RADIOACTIVE CONTENTS

This package is authorized to contain not more than 7,400 TBq (200,000 Ci) of Cobalt 60 in the form of metal, pellets, metal wafers, metal slugs, stainless steel clad wire, aluminium clad cobalt slugs. The maximum decay heat is 3,200 watts.

The authorized models of the capsules that may be contained in this package are C132, C133, C146, C151, C177, C185, C188, C189, C190, C198, C199, C200, C238, TC239, C246, C247, C248, C252, C306, C335, XC318, XC325, C348, AC191, AC195, AC345, AC339 or any other welded stainless-steel capsules that meet the requirements of the International Organization of Standardization International Standard 2919 (First Edition) under classification number E53434.

## QUALITY ASSURANCE

Quality assurance for the use, maintenance and inspection of the package shall be in accordance with:

- MDS Nordion Specification No. IN/QA 0224 Z000 (7)*, "Radioactive Material Transport Package Quality Plan"
- MDS Nordion Document No. IN/OP 0019 Z000 (13)*, "Radioactive Material Transport Packaging Inspection and Maintenance Procedure"
- Canadian Packaging and Transport of Nuclear Substances Regulations
- IAEA Regulations
- * or latest current revision

## SHIPMENT

The preparation for shipment of the package shall be in accordance with:

- MDS Nordion Specification No. IN/PP 0517 F168 (14), "Preparation for Shipment of the F-168 and F-168-X Transport Packagings"
- Canadian Packaging and Transport of Nuclear Substances Regulations
- IAEA Regulations

| Canadian Certificate No. | Issue Date | Expiry Date | CNSC File |
|---|---|---|---|
| **CDN/2045/B(U) (Rev. 17)** | **Feb-06-2008** | **Apr-30-2012** | **30-A2-94-1** |

This certificate does not relieve the shipper from any requirement of the government of any country through or into which the package will be transported.

A. Régimbald
Designated Officer pursuant to paragraph 37(2)(a)
of the Nuclear Safety and Control Act

**Parts List**

1. Upper fireshield
2. Holes for ventilation
3. Retaining brackets (4) for upper fireshield
4. Radiation caution plate (2)
5. Identification plate (2)
6. Fireshield (removable) - laminated construction: 2 x 6.3 mm (0.25 in.) Steel + 25.4 mm (1 in.) Kaowool, O.D. 1,013 mm (39.88 in.)
7. Warning plate "CAUTION - HEAT EMITTER - DO NOT STORE IN INSULATED OR REFRIGERATION CONTAINER OR INSULATED SPACE" (2)
8. Transite - steel encased
9. Vermiculite packing
10. Gasket (Neoprene)
11. 7/8 - 9 x 2 in. long hex bolt (8)
12. Wire seal
13. 3/8 in. NPT pipe plug (2)
14. Plug lift lug
15. Vent tube (sealed off at cavity)
16. Plug
17. Cavity: 479 mm x 162 mm dia. (18.87 in. x 6.37 in. dia.)
18. Radioactive contents and carrier
19. Drain tube (sealed off at cavity)
20. 3/4 -10 x 2 in. hex bolt for Skid (4)
21. Removable shipping skid, 1,372 mm (54 in.) square
22. Standard pipe plug (sealed off)
23. Category label (2): on two opposite sides
24. UN Number Label (2): one next to each of the radioactive category labels

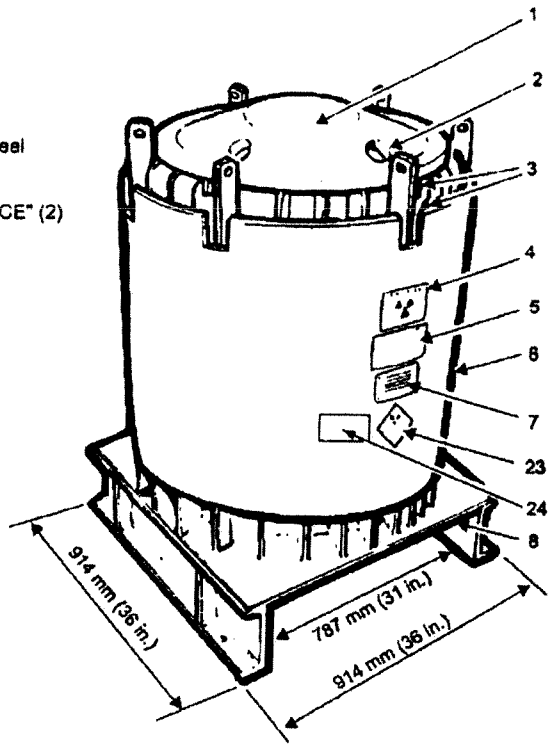


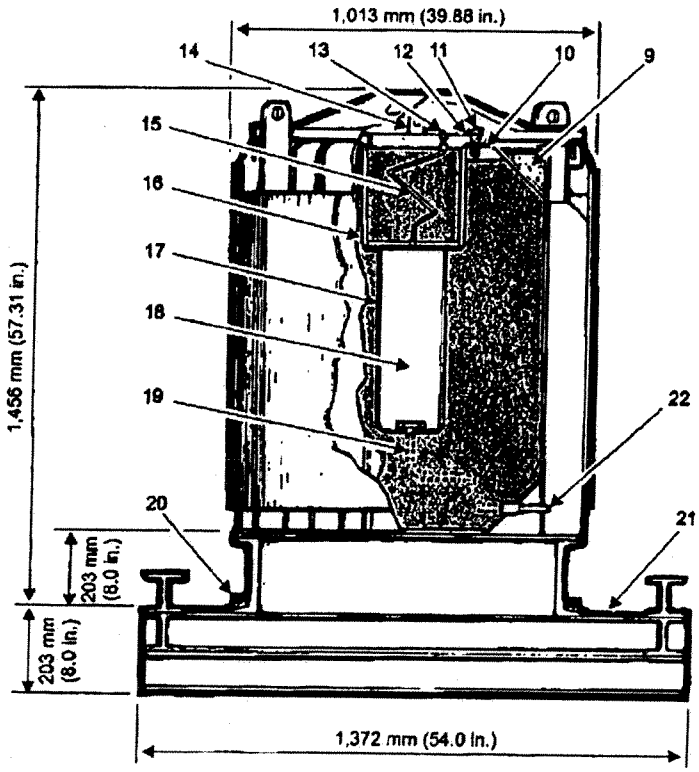


**Notes**

1. CNSC certificate CDN/2045/B(U)
2. Meets IAEA Type B(U) requirements
3. Steel encased lead shielding: 266 mm (10.5 in.)
4. Gross weight: 5,445 kg (12,000 lb.)
5. Plug weight: 177 kg (390 lb.)
6. Projected floor loading: 2,900 kg/m² (593 lb/ft²)
7. Radionuclides carried: Cobalt-60
8. Labels may be positioned as illustrated, or 45° to that shown


**MDS Nordion**

*447 March Road, P.O. Box 13500*
*Kanata, Ontario, Canada, K2K 1X8*
*Tel: (613) 592-2790 · Fax. (613) 592-6937*



THIS DRAWING IS THE PROPERTY OF MDS NORDION AND IS SUBMITTED FOR CONSIDERATION ON THE UNDERSTANDING THAT THERE SHALL BE NO EXPLOITATION OF ANY INFORMATION CONTINUED HEREIN EXCEPT WITH THE SPECIFIC WRITTEN AGREEMENT OF MDS NORDION.


TITLE

# F-168-X Transport Packaging

| | | | |
|---|---|---|---|
| REF. IN/SS 1928 F168X F116801-100/F116801-101 | | REVISED May 03 | DCN A1944-D-04A |
| DATE 1980 August | | No. F-168-X | ISSUE 6 |
| DRAWN BW | CHECKED KD | APPROVED MK | SHEET 1 OF 1 |

U.S. Department
of Transportation

**Pipeline and
Hazardous Materials
Safety Administration**

**East Building, PHH-23
1200 New Jersey Avenue SE
Washington, D.C. 20590**

**CERTIFICATE NUMBER:** USA/0214/B(U)-96, Revision 14

**ORIGINAL REGISTRANT(S):**

Mr. Marc-Andre Charette
Manager, Regulatory Affairs
MDS Nordion
447 March Road
Ottawa, K2K 1X8
CANADA

Luc Desgagne
Senior Licensing Coordinator
MDS Nordion
447 March Road
Ottawa, Ontario K2K 1X8
CANADA

Mr. Marc-Andre Charette
Manager, Regulatory Affairs
MDS Nordion
447 March Road
Ottawa, K2K 1XB
CANADA