U.S. Department
of Transportation
**Pipeline and
Hazardous Materials
Safety Administration**

**400 Seventh Street, S.W.
Washington, D.C. 20590**

**IAEA CERTIFICATE OF COMPETENT AUTHORITY
SPECIAL FORM RADIOACTIVE MATERIALS
CERTIFICATE NUMBER USA/0065/S, REVISION 8**

This certifies that the source described has been demonstrated to meet the regulatory requirements for special form radioactive material as prescribed in the regulations of the International Atomic Energy Agency[1] and the United States of America[2] for the transport of radioactive materials.

1. Source Identification - Model SR CF-1000 Series neutron sources manufactured by either the Savannah River Laboratory or the Oak Ridge National Laboratory.

2. Source Description - Cylindrical single encapsulation made of Type 304L stainless steel and inert gas seal welded. Approximate outer dimensions are 30.2 mm (1.19 in.) in diameter and 95.3 mm (3.75 in.) in length. A lifting stem on one end measures an additional 44.5 mm (1.75 in.) in length. Minimum wall thickness is 1.15 mm (0.045 in.). Construction shall be in accordance with attached E.I. Du Pont De Nemours and Co., Inc. Drawing No. ST3-18567, dated 9/10/75.

3. Radioactive Contents - No more than 1.9 TBq (52.0 Ci) of Californium-252 in the form of an oxide or cermet.

4. Quality Assurance - Records of Quality Assurance activities required by Paragraph 310 of the IAEA regulations[1] shall be maintained and made available to the authorized officials for at least three years after the last shipment authorized by this certificate. Consignors and consignees in the United States exporting or importing shipments under this certificate shall satisfy the requirements of Subpart H of 10 CFR 71.

5. Expiration Date - This certificate expires October 31, 2010.

---

1 "Regulations for the Safe Transport of Radioactive Material, 1996 Edition (Revised), No. TS-R-1 (ST-1, Revised)," published by the International Atomic Energy Agency (IAEA), Vienna, Austria.

2 Title 49, Code of Federal Regulations, Parts 100 - 199, United States of America.

CERTIFICATE USA/0065/S, REVISION 8

This certificate is issued in accordance with paragraph 804 of the IAEA Regulations and Section 173.476 of Title 49 of the Code of Federal Regulations, in response to the petition and information dated August 12, 2005 submitted by U.S. Department of Energy, Washington, DC, and in consideration of other information on file in this Office.

Certified by:

Robert A. McGuire
Associate Administrator for
Hazardous Materials Safety

OCT 12 2005
(DATE)

Revision 8 - Issued to extend the expiration date.

Analyze this print for
SAFETY CONSIDERATIONS

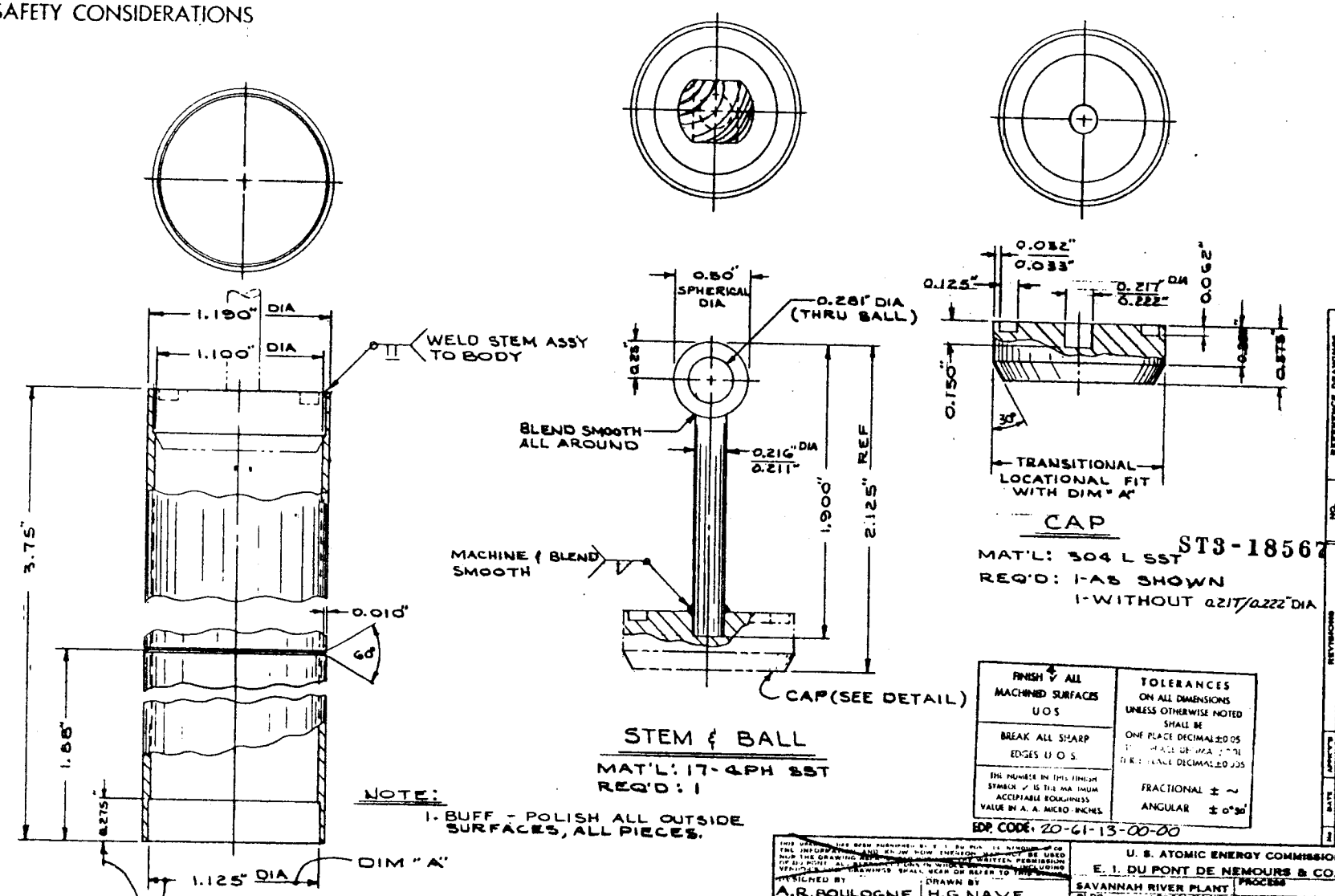

18567