U.S. Department
of Transportation
**Pipeline and
Hazardous Materials
Safety Administration**

400 Seventh Street, S.W.
Washington, D.C. 20590

**IAEA CERTIFICATE OF COMPETENT AUTHORITY
SPECIAL FORM RADIOACTIVE MATERIALS
CERTIFICATE NUMBER USA/0043/S-96, REVISION 11**

This certifies that the sources described have been demonstrated to meet the regulatory requirements for special form radioactive material as prescribed in the regulations of the International Atomic Energy Agency[1] and United States of America[2] for the transport of radioactive materials.

1. Source Identification - Monsanto Research Corporation Model 2720 Series.

2. Source Description - The sources described by this certificate are cylindrical double encapsulations constructed of stainless steel with welded closures and with the dimensions indicated in the following table:

Model Number	Outside Diameter mm (inches)	Length mm (inches)
2721 A, B, or C	12.7 (0.50)	12.7 (0.50)
2722 A, B, or C	12.7 (0.50)	17.8 (0.70)
2723 A, B, or C	19.1 (0.75)	22.1 (0.87)
2724 A, B, or C	25.4 (1.00)	28.4 (1.12)
2725 A, B, or C	25.4 (1.00)	38.1 (1.50)
2726 A, B, or C	25.4 (1.00)	50.8 (2.00)
2727 A, B, or C	38.1 (1.50)	63.5 (2.50)
2728 A, B, or C	38.1 (1.50)	88.9 (3.50)
2729 C	38.1 (1.50)	53.3 (2.10)

The sources authorized by this certificate are only those that have been manufactured prior to 1984 in accordance with Monsanto Research Corporation Drawing Numbers: B2721-AA00, B2722-AA00, B2723-AA00, B2724-AA00, B2725-AA00, B2726-AA00, B2727-AA00, B2728-AA00, A2721-BA00, A2722-BA00, A2723-BA00, A2724-BA00, A2725-BA00, A2726-BA00, A2727-BA00, A2728-BA00, C2721-CA00, C2722-CA00, C2723-CA00, C2724-CA00, C2725-CA00, C2726-CA00, C2727-CA00, C2728-CA00, or C2729-CA00. Monsanto Research Corporation Drawing Numbers C2728-CA00 and C2729-CA00 are attached as examples.

---

[1] "Regulations for the Safe Transport of Radioactive Materials, 1996 Edition (Revised)", No. TS-R-1 (ST-1, Revised), published by the International Atomic Energy Agency (IAEA), Vienna, Austria.

[2] Title 49, Code of Federal Regulations, Parts 100 - 199, United States of America.

3. Radioactive Contents - These sources consist of Americium-241 or Plutonium-238 as oxide in powder form mixed with a neutron producing target material (Be, B, Li, F, or C) in powder form. The maximum activity of each is as indicated in the following table:

Model Number	Maximum TBq (Ci) Content	Model Number	Maximum TBq (Ci) Content
2721 A	0.01 (0.3)	2726 B	0.59 (16)
2722 A	0.04 (1)	2727 B	1.74 (47)
2723 A	0.11 (3)	2728 B	2.78 (75)
2724 A	0.19 (5)	2721 C	0.01 (0.3)
2725 A	0.31 (8.5)	2722 C	0.05 (1.3)
2726 A	0.44 (12)	2723 C	0.09 (2.35)
2727 A	0.22 (6)	2724 C	0.21 (5.6)
2728 A	0.37 (10)	2725 C	0.42 (11.4)
2721 B	0.01 (0.4)	2726 C	0.65 (17.7)
2722 B	0.05 (1.4)	2727 C	1.78 (48)
2723 B	0.11 (2.9)	2728 C	2.89 (78)
2724 B	0.22 (6)	2729 C	1.28 (34.7)
2725 B	0.37 (10)		

4. Quality Assurance - Records of Quality Assurance activities required by paragraph 310 of the IAEA regulations[1] shall be maintained and made available to the authorized officials for at least three years after the last shipment authorized by this certificate. Consignors and consignees in the United States exporting or importing shipments under this certificate shall satisfy the requirements of Subpart H of 10 CFR 71.

5. Expiration Date - This certificate expires on May 31, 2012.

This certificate is issued in accordance with paragraph 804 of the IAEA Regulations and Section 173.476 of Title 49 of the Code of Federal Regulations, in response to the petition and information dated April 16, 2007 submitted by J.L. Shepherd and Associates, San Fernando, CA, and in consideration of other information on file in this Office.

Certified by:

MAY -4 2007

Bob Richard
Deputy Associate Administrator for Hazardous Materials Safety

(DATE)

Revision 11 - Issued to extend the expiration date.

REVISIONS					
ZONE	SYM	DESCRIPTION	DATE	APPROVAL	DE PG QA MS

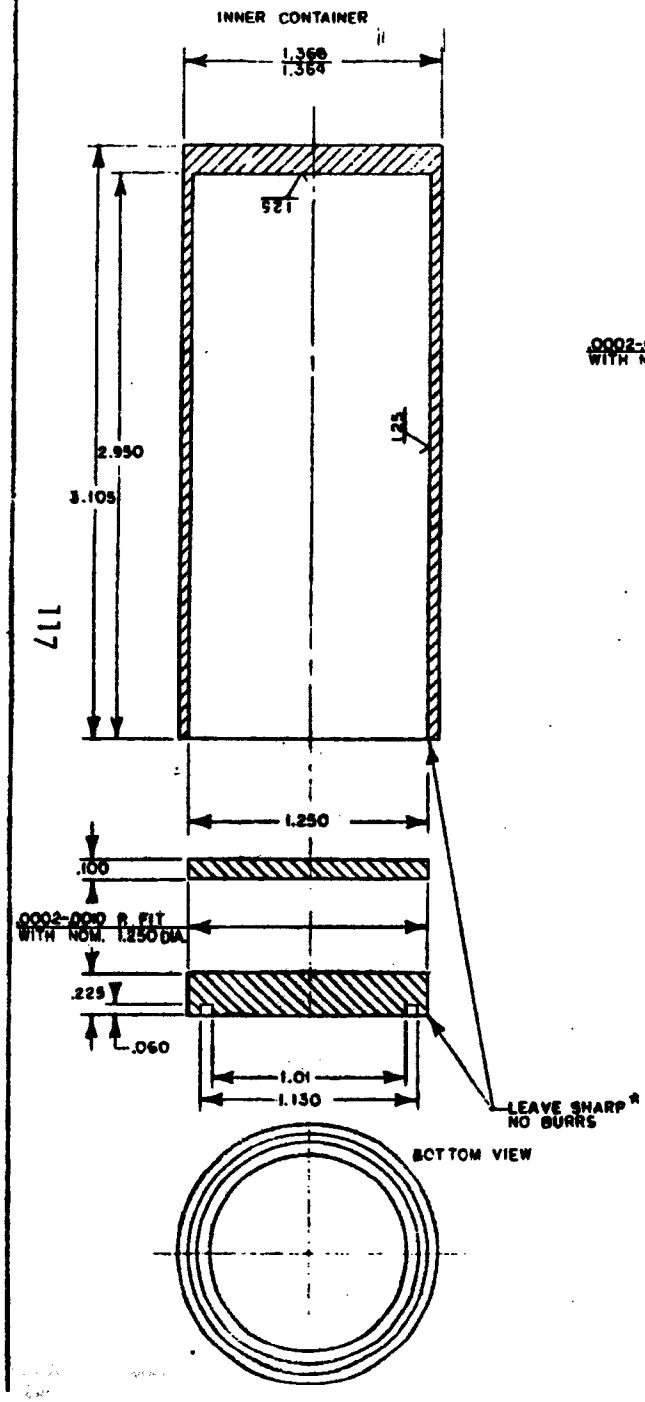

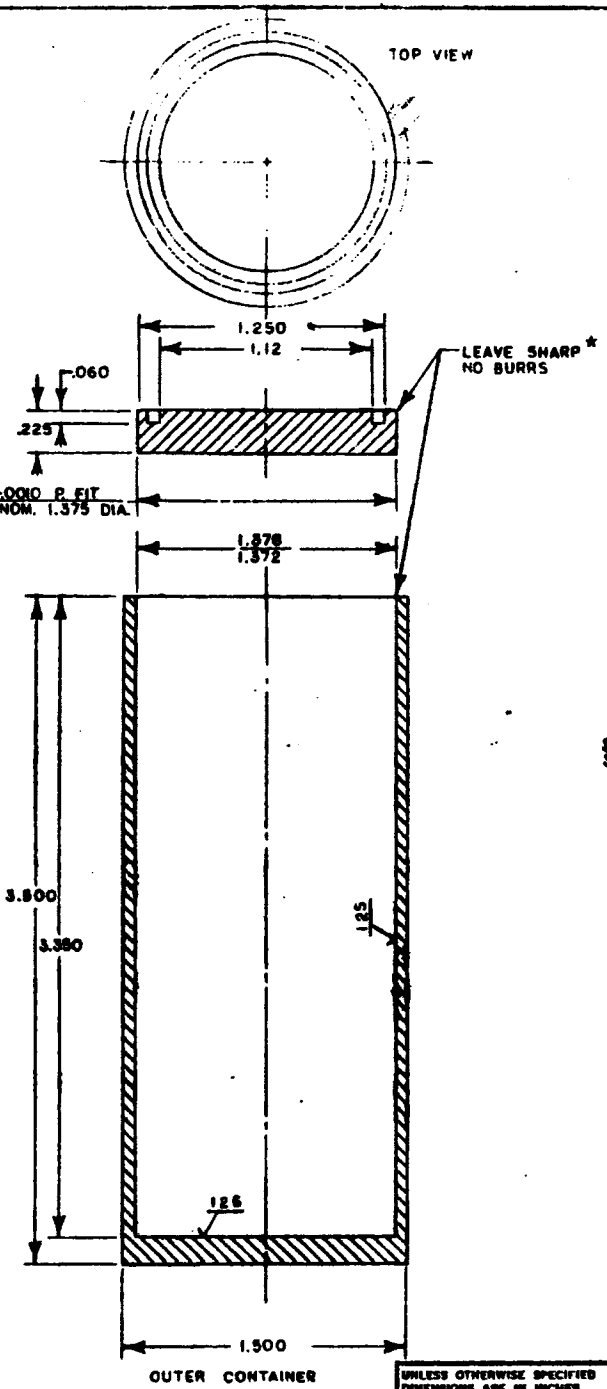

NOTES:

1. MIN WELD PENETRATION ~.045 FOR EACH CONTAINER.
2. UNLESS OTHER SPECIFIED: BREAK OUTSIDE CORNERS .010 - .020", RADIUS INSIDE CORNERS .010".
3. *INDICATES VISUAL INSPECTION IS ACCEPTABLE.
4. INNER CAPSULE TO BE INSERTED WELDED END FIRST INTO THE OUTER CAPSULE.
5. IF NECESSARY, S.S. SHIMS MAY BE PLACED BETWEEN INNER AND OUTER CONTAINER TO LIMIT MOVEMENT.

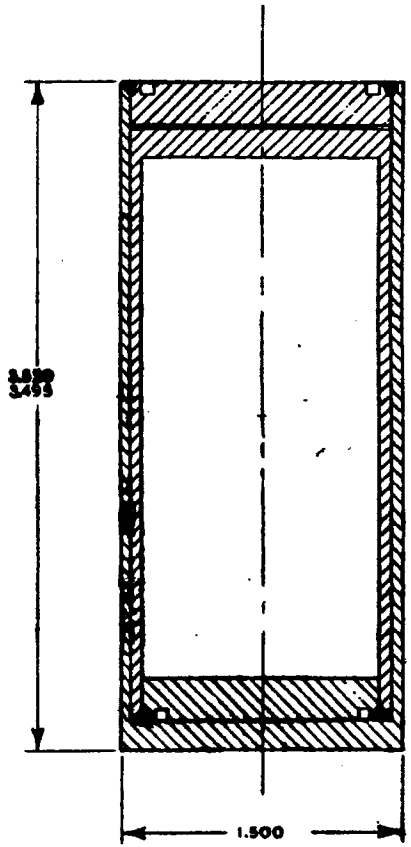

COMPLETED ASSEMBLY

DWG NO.	REV
SHEET OF	

NOTICE

This drawing is the property of Monsanto Research Corporation and must be returned, without reproduction or duplication, at any time upon request, but in any event at completion of the work or job. While in the possession of the recipient, it must be properly safeguarded against revelation or disclosure to anyone except those employees who require it for the work or job. The recipient must keep confidential, and require his (its) employees to keep confidential, the information contained herein.

UNLESS OTHERWISE SPECIFIED DIMENSIONS ARE IN INCHES	MS APPD	RRK	3-10-81
TOLERANCES: DECIMALS .XX = ± .02, .XXX = ± .005, .XXXX BASIC; FRACTIONS ±; ANGLES ± 30'	QA APPD	DFB	3/10/81
ALL SURFACES 32	MP APPD	HC	3/11/81
MATERIAL 304 S.S.	DE APPD	DFB	3/11/81
FINISH	CHECKED		
	DRAWN	HAM	3-6-81

MONSANTO RESEARCH CORPORATION
DAYTON LABORATORY
DAYTON, OHIO

NEUTRON SOURCE CONTAINER
MODEL 2728-C

DWG NO. C2728-CA00 REV 0

SCALE 2:1 WT CALC

REVISIONS			DE	MFG	QA	MS
SYM.	DESCRIPTION	DATE	APPROVAL			

NOTES:

1. UNLESS OTHERWISE SPECIFIED:
   BREAK OUTSIDE CORNERS .010 - .020"
   RADIUS INSIDE CORNERS .010
2. ALL CORNERS DESIGNATED WITH AN X SHALL BE LEFT SHARP*, NO BURRS.
3. *INDICATES VISUAL INSPECTION IS ACCEPTABLE.
4. INNER CAPSULE TO BE INSERTED WELDED END FIRST INTO THE OUTER CAPSULE.
5. IF NECESSARY, S.S. SHIMS MAY BE PLACED BETWEEN INNER AND OUTER CONTAINER TO LIMIT MOVEMENT.
6. MIN. WELD PENETRATION - .045" FOR EACH CONTAINER.

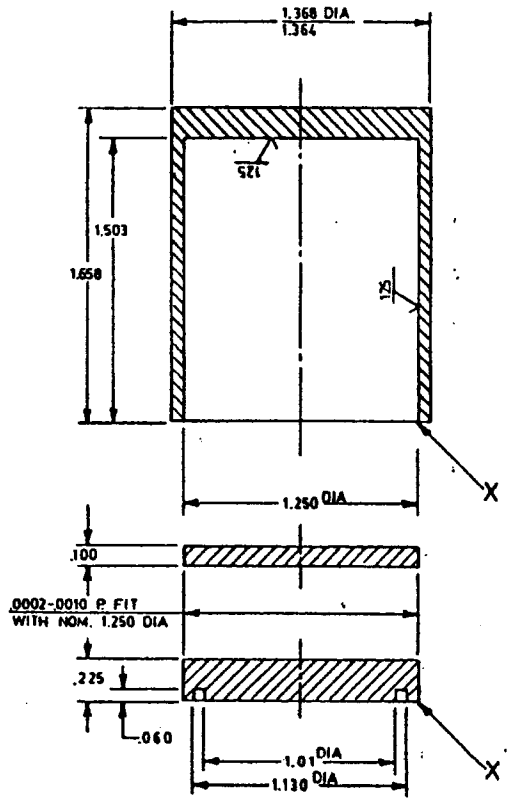

INNER CONTAINER

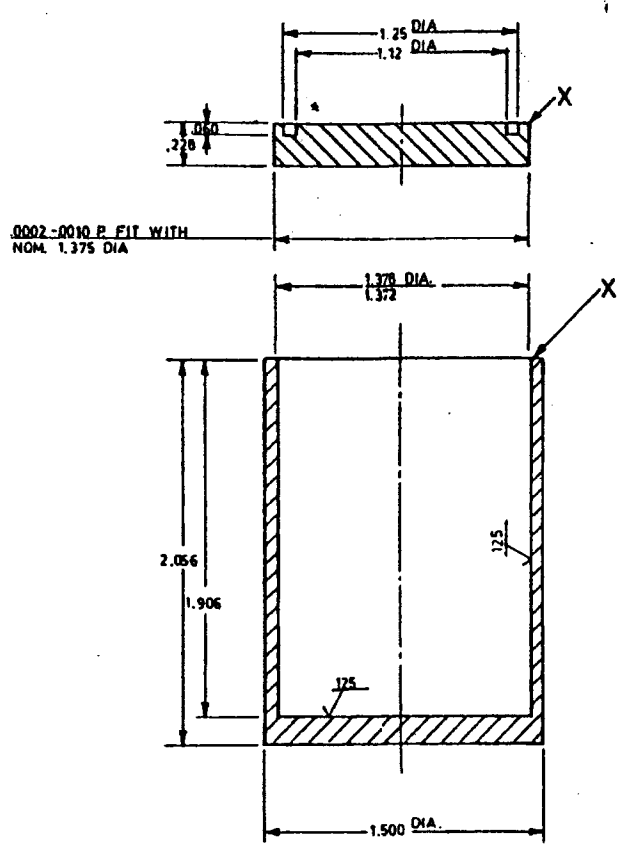

OUTER CONTAINER

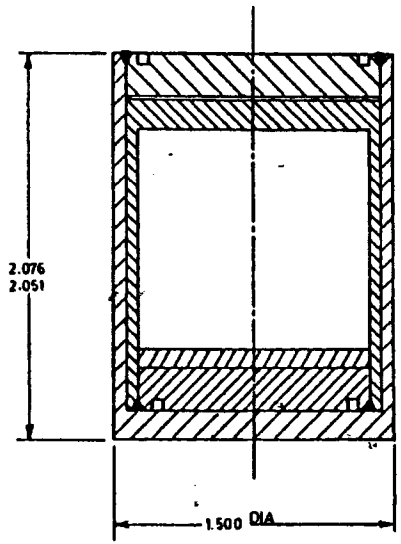

ASSEMBLY

DIMENSIONS ARE IN ☒ INCHES ☐ MILLIMETERS

UNLESS OTHERWISE SPECIFIED
TOLERANCES:
DECIMALS
.XX = ± .02
.XXX = ± .005
.XXXX BASIC
FRACTIONS ±
ANGLES ±
ALL SURFACES 32

MATERIAL 304 STAINLESS STEEL

MS	RRK	2-3-83
QA	CEY	2-9-83
MFG	HK	2/9/83
DE	JAB	2-11-83
DRAWN	HAM	2-7-83

APPROVALS

MONSANTO RESEARCH CORPORATION
DAYTON LABORATORY
DAYTON, OHIO

NEUTRON SOURCE CAPSULE MODEL 2729-C

DWG. NO. C2729-CA00 REV 0

U.S. Department
of Transportation

**Pipeline and
Hazardous Materials
Safety Administration**

**East Building, PHH-23
1200 New Jersey Avenue Southeast
Washington, D.C. 20590**

CERTIFICATE NUMBER: USA/0043/S-96, Revision 11

ORIGINAL REGISTRANT(S):

Ms. Mary Shepherd
Vice President
J.L. Shepherd
1010 Arroyo Ave.
San Fernando, 91340-1822
USA

REGISTERED USER(S):

Mr. Norman Kent
Manager, Transport Licensing and Regulatory Compliance
Westinghouse
P.O. Drawer R
Columbia, 29250
USA

Wayne Vogel
RSO
Westinghouse
P.O. Box 158
Madison, PA 15663

John Harvey, Ph.D
Senior Health Physicist
McMaster University
Health Physics, Nuclear Research Building
1280 Main Street West
Hamilton, L8S 4K1
Canada

Mr. Dooley Buckner
Transportation Program Manager
Bechtel Jacobs Company
P.O. Box 4699
Oak Ridge, TN 37831